Introduction

Benoît Legat

Understand simple things deeply

☐ Full Width Mode ☐ Present Mode

Table of Contents

Deepseek event

What do these libraries really do ?

Grading

Deepseek event

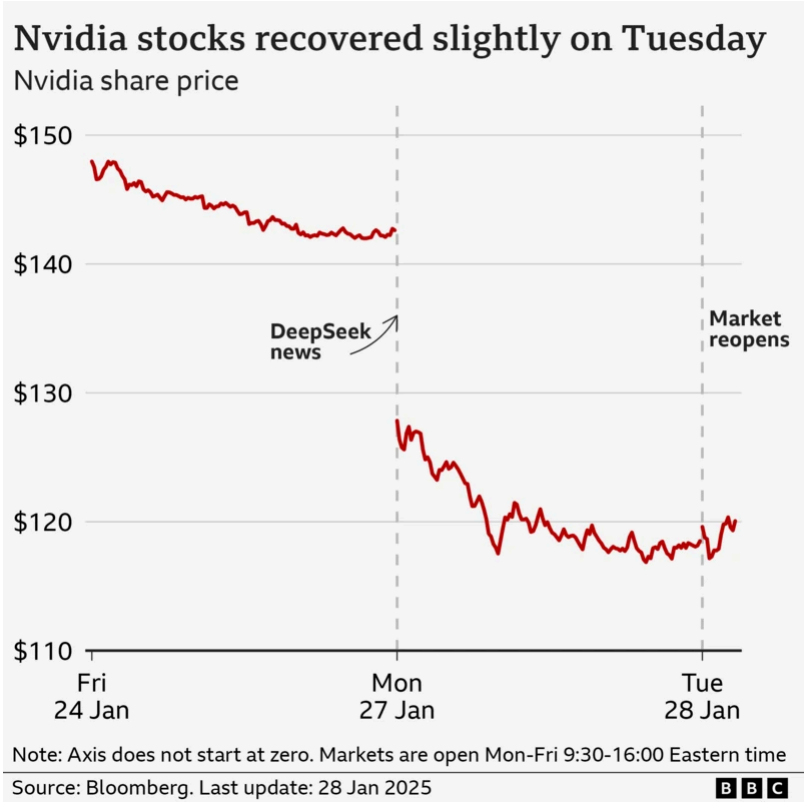

Distillation

2.3.1. *Cold Start*

Unlike DeepSeek-R1-Zero, to prevent the early unstable cold start phase of RL training from the base model, for DeepSeek-R1 we construct and collect a small amount of long CoT data to fine-tune the model as the initial RL actor. To collect such data, we have explored several approaches: using few-shot prompting with a long CoT as an example, directly prompting models to generate detailed answers with reflection and verification, gathering DeepSeek-R1-Zero outputs in a readable format, and refining the results through post-processing by human annotators.

In this work, we collect thousands of cold-start data to fine-tune the DeepSeek-V3-Base as the starting point for RL. Compared to DeepSeek-R1-Zero, the advantages of cold start data

Model	AIME 2024		MATH-500	GPQA Diamond	LiveCodeBench
	pass@1	cons@64	pass@1	pass@1	pass@1
QwQ-32B-Preview	50.0	60.0	90.6	54.5	41.9
DeepSeek-R1-Zero-Qwen-32B	47.0	60.0	91.6	55.0	40.2
DeepSeek-R1-Distill-Qwen-32B	**72.6**	**83.3**	**94.3**	**62.1**	**57.2**

Table 6 | Comparison of distilled and RL Models on Reasoning-Related Benchmarks.

Low-level improvements

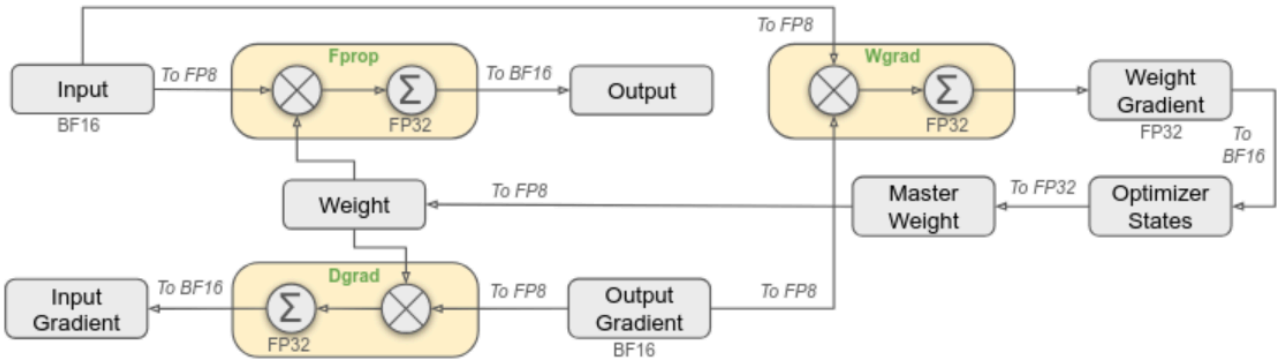

Figure 6 | The overall mixed precision framework with FP8 data format. For clarification, only the `Linear` operator is illustrated.

▶ **Is it worth developing such low-level improvements?**

What do these libraries really do ?

PyTorch

TensorFlow

Accelerated automatic differentation

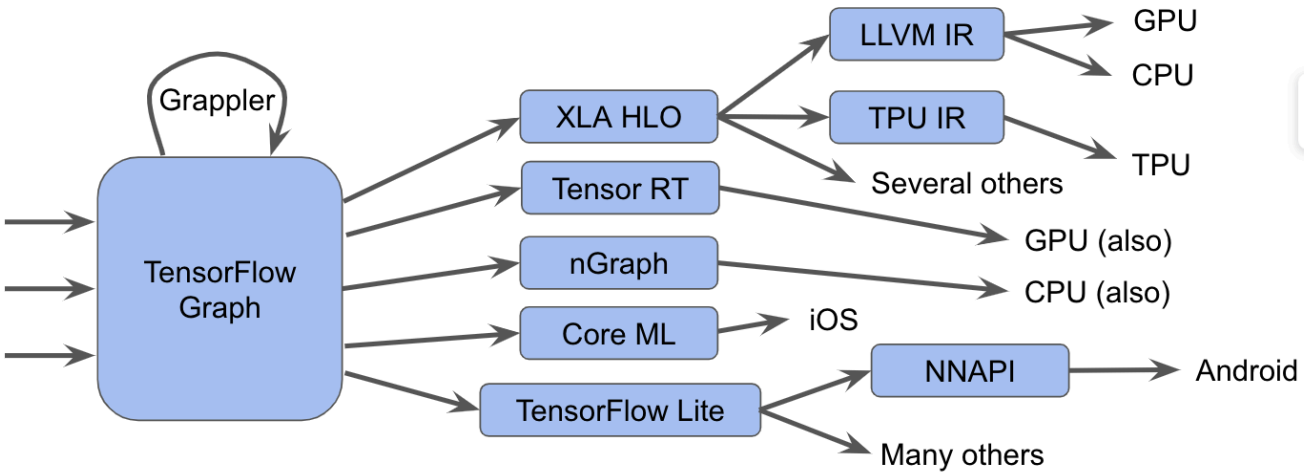

MLIR

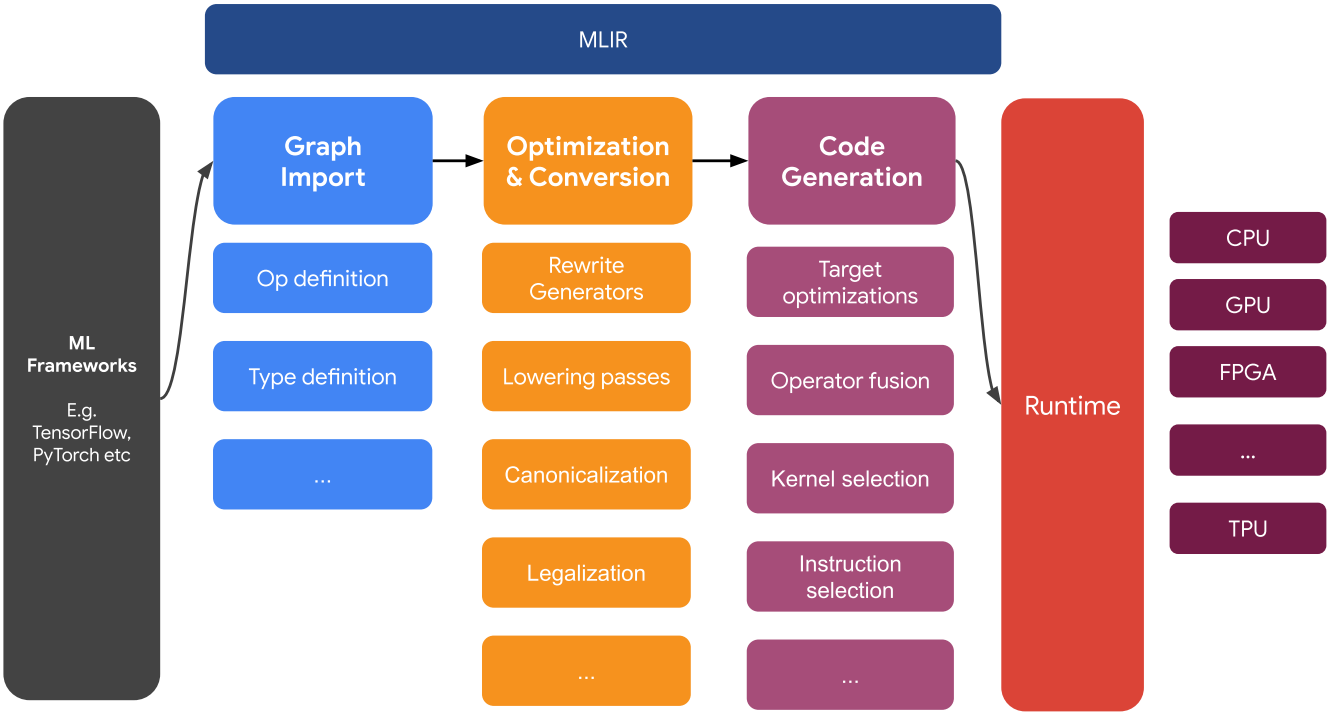

DIY

The goal of the course it to take a tour of **automatic differentiation**. For this we will write our own from scratch, in julia.

Yann LeCun
@ylecun · **Follow**

Hotter take: ML would have advanced faster if another front-end language had been available and widely adopted instead of Python.
One that is interactive yet fast & compilable, multithreaded (no GIL), isn't bloated, doesn't care about white spaces,...
E.g. Julia or some Lisp.

> **Bojan Tunguz** @tunguz
>
> Hot take: Machine Learning would not have been nearly as advanced now were it not for Python. Python's two main virtues in the context of ML:
>
> 1. Lowering barriers to entry.
>
> 2. As a scripting language, it encourages and enables experimental workflow.

1:27 PM · Feb 22, 2023

3.2K **Reply** **Copy link**

Read 295 replies

Grading

- If exam or homework is below 5, grade is the minimum of both
- If exam and homework are above 10, grade is the average of both
- Otherwise, we interpolate between these cases as follows
- Gain bonus points by contributing to the Git or winning benchmarks with the projects

```
f (generic function with 1 method)
```

```
f(x) = min(max(0, (x - 5)/10), 0.5)
```

```
g (generic function with 1 method)
```

```
g(a, b) = f(a) * b + (1 - f(a)) * a
```

```
grade (generic function with 1 method)
```

```
grade(HW, EX) = min(g(HW, EX), g(EX, HW))
```

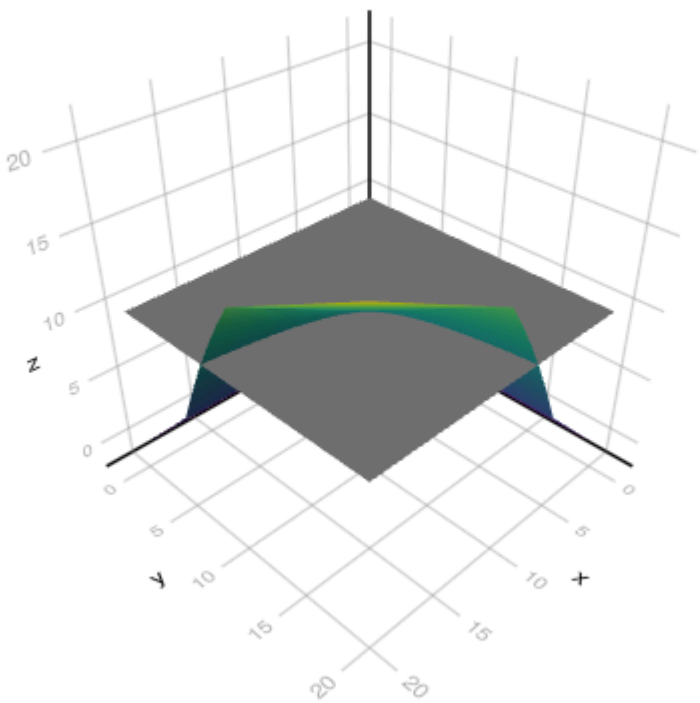

The End

```julia
using Colors, WGLMakie
```

```julia
using Plots, PlutoUI, PlutoUI.ExperimentalLayout, HypertextLiteral; @htl, @htl_str
PlutoTeachingTools, ShortCodes
```

```
img (generic function with 3 methods)

qa (generic function with 2 methods)
```