LINMA2710 - Scientific Computing Graphics processing unit (GPU)

P.-A. Absil and B. Legat

☐ Full Width Mode ☐ Present Mode

Table of Contents

Introduction

Examples

Reduction on GPU

Sources

- OpenCL.jl
- HandsOnOpenCL
- Optimizing Parallel Reduction in CUDA
- Parallel Computation Patterns (Reduction)
- Profiling, debugging and optimization
- How to use TAU for Performance Analysis

Introduction

Context

Error message from ArgTools

```
RequestError: HTTP/2 429 while requesting
https://upload.wikimedia.org/wikipedia/commons/2/21/OpenGL_logo.svg
```

Stack trace

Here is what happened, the most recent locations are first:

1. anonymous function(output::IOStream) ...show types...
   from *Downloads.jl:285*
2. **#open#330**(f::Downloads.var"#7#8"{…}, args::String; kwargs::@Kwargs{…}) ...show types...
   from *io.jl:410*
3. open_nolock
   from *ArgTools.jl:35*
4. **arg_write**(f::Function, arg::String)
   from **ArgTools** → *ArgTools.jl:103*
5. #download#5
   from *Downloads.jl:272*
6. download
   from *Downloads.jl:252*
7. **#RobustLocalResource#30**(url::String, path::String, html_attributes::Pair{…}; cache::Bool) ...show types...
   from *robustlocalresource.jl:20*
8. **#img#73**(url::URL, args::Pair{…}; kws::@Kwargs{}) ...show types...
   from Other cell: *line 27*

```
25 end
```

```
function img(url::URL, args...; kws...)
    r, _ = save_image(url, args...; kws...)
    return @htl("<a href=$(url.url)>$r</a>")
```

cell preview

9. Show more...

```
hbox([
    md"""
* Most *dedicated* GPUs produced by $(img("https://upload.wikimedia.org/wikipedia/commons/a/a4/NVIDIA_logo.svg", :height => "15pt")) and $(img("https://upload.wikimedia.org/wikipedia/commons/7/7c/AMD_Logo.svg", :height => "15pt"))
* *Integrated* GPUs by $(img("https://upload.wikimedia.org/wikipedia/commons/6/6a/Intel_logo_%282020%2C_dark_blue%29.svg", :height => "15pt")) used in laptops to reduce power consumption
* Designed for 3D rendering through ones of the APIs : $(img("https://upload.wikimedia.org/wikipedia/commons/7/7f/Microsoft-DirectX-Logo-wordmark.svg", :height => "20pt")), $(img("https://upload.wikimedia.org/wikipedia/commons/2/21/OpenGL_logo.svg", :height => "20pt")), $(img("https://upload.wikimedia.org/wikipedia/commons/2/25/WebGL_Logo.svg", :height => "20pt")), $(img("https://upload.wikimedia.org/wikipedia/commons/2/2f/WebGPU_logo.svg", :height => "25pt")), $(img("https://upload.wikimedia.org/wikipedia/commons/f/fe/Vulkan_logo.svg", :height => "20pt")) or Apple's Metal $(img("https://upload.wikimedia.org/wikipedia/commons/8/8d/Metal_3_Logo.png", :height => "20pt"))
* Illustration on the right is from [Charge's film](https://studio.blender.org/blog/charge-poster/?utm_medium=homepage), it shows how 3D modeling works.
""",
    img("https://upload.wikimedia.org/wikipedia/commons/f/fd/Charge-movie_poster.jpg", :width => "120"),
])
```

Reading hidden code

General-Purpose computing on GPU (GPGPU)

Also known as *compute shader* as they abuse the programmable shading of GPUs by treating the data as texture maps.

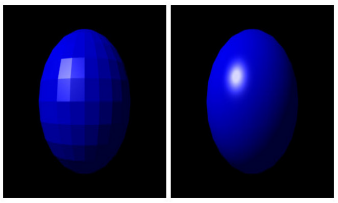

Error message from ArgTools

```
RequestError: HTTP/2 429 while requesting
https://upload.wikimedia.org/wikipedia/commons/b/b9/Nvidia_CUDA_Logo.jpg
```

Stack trace

Here is what happened, the most recent locations are first:

1. anonymous function(output::IOStream) ...show types...
   from *Downloads.jl:285*
2. **#open#330**(f::Downloads.var"#7#8"{…}, args::String; kwargs::@Kwargs{…}) ...show types...
   from *io.jl:410*
3. open_nolock
   from *ArgTools.jl:35*
4. **arg_write**(f::Function, arg::String)
   from **ArgTools** → *ArgTools.jl:103*
5. #download#5
   from *Downloads.jl:272*
6. download
   from *Downloads.jl:252*
7. **#RobustLocalResource#30**(url::String, path::String, html_attributes::Pair{…}; cache::Bool) ...show types...
   from *robustlocalresource.jl:20*
8. **#img#73**(url::URL, args::Pair{…}; kws::@Kwargs{}) ...show types...
   from Other cell: *line 27*

```
end

function img(url::URL, args...; kws...)
    r, _ = save_image(url, args...; kws...)
    return @htl("<a href=$(url.url)>$r</a>")
```

cell preview

9. Show more...

```
grid([

```

```
md"Hardware-specific"
img("https://upload.wikimedia.org/wikipedia/commons/b/b9/Nvidia_CUDA_Logo.jpg",
:height => "70pt")
img("https://upload.wikimedia.org/wikipedia/commons/7/7b/ROCm_logo.png",
:height => "60pt") md"""` `
$(img("https://upload.wikimedia.org/wikipedia/commons/6/6a/Intel_logo_%282020%2C
_dark_blue%29.svg", :height => "30pt"))
$(img("https://upload.wikimedia.org/wikipedia/en/f/fa/OneAPI-rgb-3000.png",
:height => "60pt"))"""
md"Common interface"
img("https://upload.wikimedia.org/wikipedia/commons/4/4d/OpenCL_logo.svg")
img("https://upload.wikimedia.org/wikipedia/commons/1/12/SYCL_logo.svg")
img("https://d29g4g2dyqv443.cloudfront.net/sites/default/files/akamai/designwork
s/blog1/OpenACC-logo.png", :height => "50pt")
```

Reading hidden code

Standard Portable Intermediate Representation (SPIR)

Similar to LLVM IR : Intermediate representation for accelerated computation.

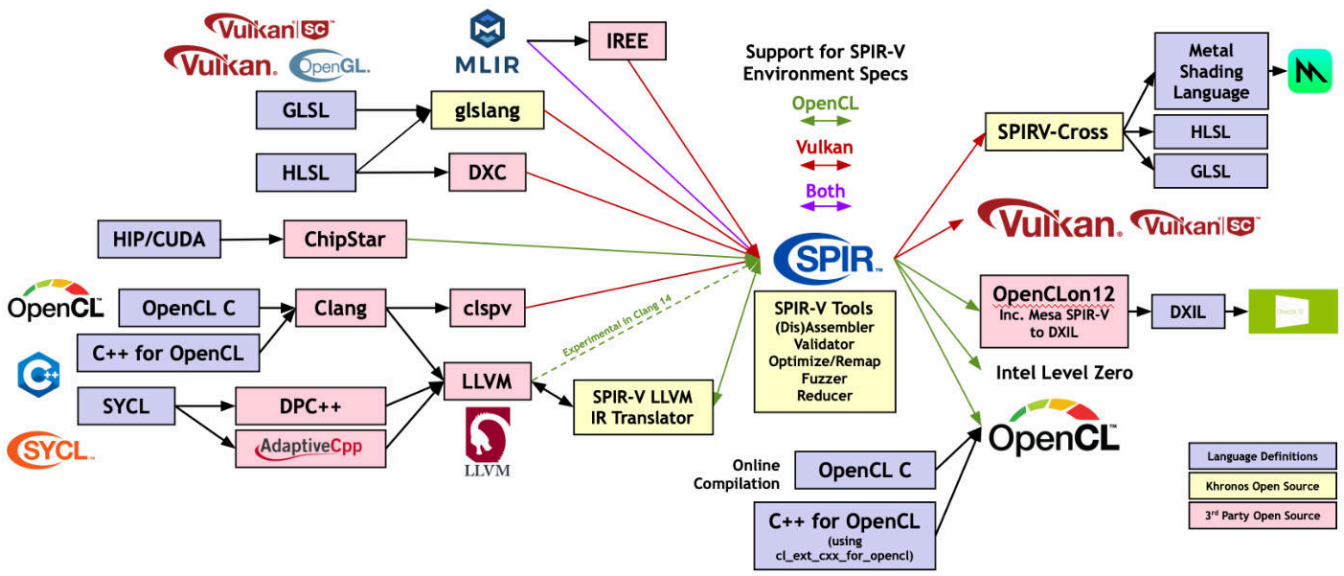

Hierarchy

- CPUs:
  - All CPUs part of same device
  - 1 Compute Unit per core
  - Number of processing elements equal to SIMD width
- GPUs:
  - One device per GPU

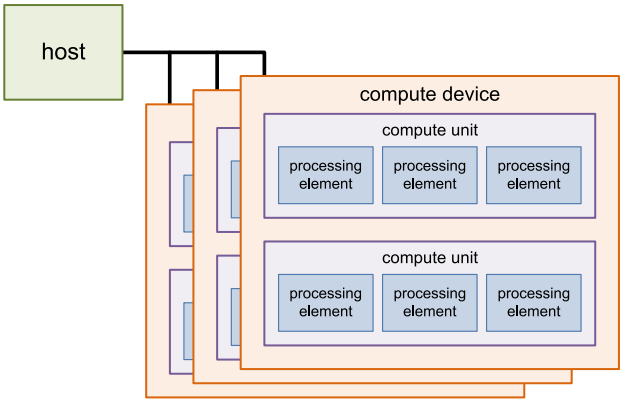

compute device	compute unit	processing element
`get_global_id`	`get_group_id`	`get_local_id`
`get_global_size`	`get_num_groups`	`get_local_size`

Memory

Error message from ArgTools

```
RequestError: HTTP/2 429 while requesting
https://upload.wikimedia.org/wikipedia/de/d/d1/OpenCL_Memory_model.svg
```

Stack trace

Here is what happened, the most recent locations are first:

1. `anonymous function(output::IOStream) ...show types...`
   from *Downloads.jl:285*
2. `#open#330(f::Downloads.var"#7#8"{…}, args::String; kwargs::@Kwargs{…}) ...show types...`
   from *io.jl:410*
3. `open_nolock`

```
    from ArgTools.jl:35

4. arg_write(f::Function, arg::String)
    from ArgTools → ArgTools.jl:103

5. #download#5
    from Downloads.jl:272

6. download
    from Downloads.jl:252

7. RobustLocalResource(::String, ::String; cache::Bool)
    from robustlocalresource.jl:20

8. RobustLocalResource
    from robustlocalresource.jl:7

9. #save_image#72
    from Other cell: line 24
```

```
function save_image(url::URL, html_attributes...; name = split(url.url, '/')[end], kws...)
    path = joinpath("cache", name)
    return PlutoTeachingTools.RobustLocalResource(url.url, path, html_attributes...), path
end
```

cell preview

```
10. Show more...
```

```
img("https://upload.wikimedia.org/wikipedia/de/d/d1/OpenCL_Memory_model.svg")
```

👀 Reading hidden code

OpenCL Platforms and Devices

- Platforms are OpenGL implementations, listed in `/etc/OpenCL/vendors`
- Devices are actual CPUs/GPUs
- ICD allows to change platform at runtime

```julia
OpenCL.versioninfo()
```

```
OpenCL.jl version 0.10.9

Toolchain:
 - Julia v1.12.5
 - OpenCL: 2024.10.24+1
 - SPIRV_LLVM_Backend: 20.1.5+3

Julia packages:
- GPUArrays: 11.4.1
- GPUCompiler: 1.8.2
- KernelAbstractions: 0.9.40
- LLVM: 9.4.6
- SPIRVIntrinsics: 0.5.7

Available platforms: 1
 - Portable Computing Language
   OpenCL 3.0, PoCL 7.1  Linux, Release, RELOC, SPIR-V, LLVM 20.1.2jl, SLEEF, DISTRO, POCL_DEBUG
   · cpu-haswell-AMD EPYC 7763 64-Core Processor (svm:c+f, usm:h+d, bda, fp64, il)
```

See also `clinfo` command line tool and `examples/OpenCL/common/device_info.c`.

Tip

▶ **tl;dr To refresh the list of platforms, you need to quit Julia and open a new session**

Important stats

- Platform
  - name: Portable Computing Language
  - profile: FULL_PROFILE
  - vendor: The pocl project
  - version: PoCL 7.1 Linux, Release, RELOC, SPIR-V, LLVM 20.1.2jl, SLEEF, DISTRO, POCL_DEBUG
- Device
  - name: cpu-haswell-AMD EPYC 7763 64-Core Processor
  - type: cpu

clGetDeviceInfo	Value
CL_DEVICE_GLOBAL_MEM_SIZE	11.62 GiB
CL_DEVICE_MAX_COMPUTE_UNITS	4
CL_DEVICE_LOCAL_MEM_SIZE	512.00 KiB
CL_DEVICE_MAX_WORK_GROUP_SIZE	4096
CL_DEVICE_NATIVE_VECTOR_WIDTH_HALF	0
CL_DEVICE_NATIVE_VECTOR_WIDTH_FLOAT	8
CL_DEVICE_NATIVE_VECTOR_WIDTH_DOUBLE	4
CL_DEVICE_MAX_CLOCK_FREQUENCY	3244 MHz
CL_DEVICE_PROFILING_TIMER_RESOLUTION	1.000 ns

Portable Computing Language

cpu-haswell-AMD EPYC 7763 64-Core Processor

Examples

Vectorized sum

```
__kernel void vadd(
    __global const float *a,
    __global const float *b,
    __global float *c,
    int verbose) {
  int i = get_global_id(0);
  c[i] = a[i] + b[i];
```

vadd_size = 512

vadd_verbose = 0

```
5 warnings generated.
CL_KERNEL_WORK_GROUP_SIZE                    | 4096
CL_KERNEL_COMPILE_WORK_GROUP_SIZE            | (0, 0, 0)
CL_KERNEL_LOCAL_MEM_SIZE                     | 0 bytes
CL_KERNEL_PRIVATE_MEM_SIZE                   | 0 bytes
CL_KERNEL_PREFERRED_WORK_GROUP_SIZE_MULTIPLE | 8
Send command from host to device   | 1.142 µs
Including data transfer            | 35.697 ms
Execution of kernel                | 26.179 µs
```

Portable Computing Language

cpu-haswell-AMD EPYC 7763 64-Core Processor

```
vadd (generic function with 1 method)
```

Mandelbrot

```
__kernel void mandelbrot(__global float2 *q,
    __global ushort *output, ushort const maxit) {

  int gid = get_global_id(0), it;
  if (gid == 0)
    printf("%d\n", get_num_groups(0));
  float tmp, real = 0, imag = 0;
  output[gid] = 0;
  for(it = 0; it < maxit; it++) {
    tmp = real * real - imag * imag + q[gid].x;
    imag = 2 * real * imag + q[gid].y;
    real = tmp;
    if (real * real + imag * imag > 4.0f)
        output[gid] = it;
```

mandel_size = 512

maxiter = 100

```
q = [ComplexF32(r,i) for i=1:-(2.0/mandel_size):-1, r=-1.5:(3.0/mandel_size):0.5];
```

```
mandel_image = mandel(q, maxiter, mandel_device; global_size=length(q));
```

```
1 warning generated.
CL_KERNEL_WORK_GROUP_SIZE                    | 4096
CL_KERNEL_COMPILE_WORK_GROUP_SIZE            | (0, 0, 0)
CL_KERNEL_LOCAL_MEM_SIZE                     | 0 bytes
CL_KERNEL_PRIVATE_MEM_SIZE                   | 0 bytes
CL_KERNEL_PREFERRED_WORK_GROUP_SIZE_MULTIPLE | 8
57
Send command from host to device   | 1.062 μs
Including data transfer            | 31.511 ms
Execution of kernel                | 12.913 ms
```

Portable Computing Language

cpu-haswell-AMD EPYC 7763 64-Core Processor

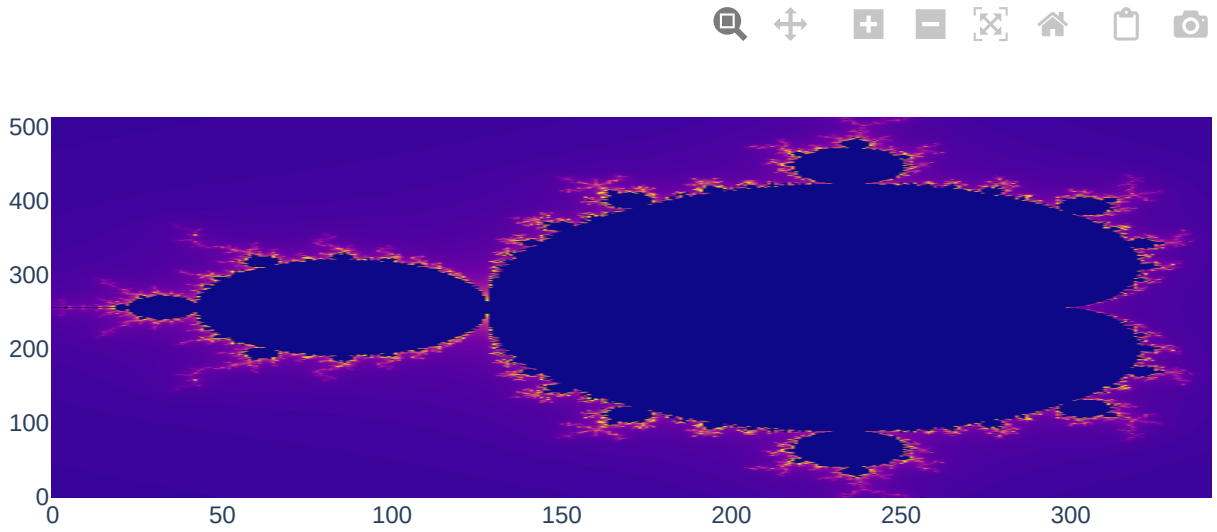


```
mandel (generic function with 1 method)
```

Compute π

```
3.1418869495391846
```

```
mypi()
```

```
CL_KERNEL_WORK_GROUP_SIZE                    | 4096
CL_KERNEL_COMPILE_WORK_GROUP_SIZE            | (0, 0, 0)
CL_KERNEL_LOCAL_MEM_SIZE                     | 0 bytes
CL_KERNEL_PRIVATE_MEM_SIZE                   | 0 bytes
CL_KERNEL_PREFERRED_WORK_GROUP_SIZE_MULTIPLE | 8
Send command from host to device   | 1.313 µs
Including data transfer            | 28.760 ms
Execution of kernel                | 63.421 ms
```

▶ **How to compute π with a kernel ?**

Portable Computing Language

cpu-haswell-AMD EPYC 7763 64-Core Processor

```
mypi (generic function with 1 method)
```

First element

Let's write a simple kernel that returns the first element of a vector in global memory.

```
__kernel void first_el(__global float* glob, __global float* result) {
  int item = get_local_id(0);
  if (item == 0)
    *result = glob[item];
}
```

```
0.9659883f0
```

```
first_el(rand(Float32, first_el_len))
```

```
CL_KERNEL_WORK_GROUP_SIZE                    | 4096
CL_KERNEL_COMPILE_WORK_GROUP_SIZE            | (0, 0, 0)
CL_KERNEL_LOCAL_MEM_SIZE                     | 0 bytes
CL_KERNEL_PRIVATE_MEM_SIZE                   | 0 bytes
CL_KERNEL_PREFERRED_WORK_GROUP_SIZE_MULTIPLE | 8
Send command from host to device   | 1.163 μs
Including data transfer            | 21.313 ms
Execution of kernel                | 19.136 μs
```

```
first_el (generic function with 1 method)
```

Portable Computing Language

cpu-haswell-AMD EPYC 7763 64-Core Processor

first_el_len = 16

Copy to local memory

```
__kernel void copy_to_local(__global float* glob, __local float* shared) {
  int global_size = get_global_size(0);
  int local_size = get_local_size(0);
  int item = get_local_id(0);
  shared[item] = 0;
  for (int i = 0; i < global_size; i += local_size) {
    shared[item] += glob[i + item];
  }
}
```

```
copy_to_local(copy_global_len, copy_local_len)
```

```
CL_KERNEL_WORK_GROUP_SIZE                    | 4096
CL_KERNEL_COMPILE_WORK_GROUP_SIZE            | (0, 0, 0)
CL_KERNEL_LOCAL_MEM_SIZE                     | 0 bytes
CL_KERNEL_PRIVATE_MEM_SIZE                   | 0 bytes
CL_KERNEL_PREFERRED_WORK_GROUP_SIZE_MULTIPLE | 8
Send command from host to device   | 1.202 μs
Including data transfer            | 22.198 ms
Execution of kernel                | 17.522 μs
```

copy_to_local (generic function with 1 method)

Portable Computing Language

cpu-haswell-AMD EPYC 7763 64-Core Processor

copy_global_len = 16

copy_local_len = 16

Reduction on GPU

Many operations can be framed in terms of a MapReduce operation.

- Given a vector of data
- It first map each elements through a given function
- It then reduces the results into a single element

The mapping part is easily embarassingly parallel but the reduction is harder to parallelize. Let's see how this reduction step can be achieved using arguably the simplest example of `mapreduce`, the sum (corresponding to an identity map and a reduction with `+`).

Sum

(OpenCL = 8.81811, Classical = 8.81811)

```
local_sum(global_len, local_len, local_code, local_device)
```

```
CL_KERNEL_WORK_GROUP_SIZE                    | 4096
CL_KERNEL_COMPILE_WORK_GROUP_SIZE            | (0, 0, 0)
CL_KERNEL_LOCAL_MEM_SIZE                     | 0 bytes
CL_KERNEL_PRIVATE_MEM_SIZE                   | 0 bytes
CL_KERNEL_PREFERRED_WORK_GROUP_SIZE_MULTIPLE | 8
Send command from host to device   | 1.032 μs
Including data transfer            | 31.267 ms
Execution of kernel                | 18.214 μs
```

How to compute the sum an array in local memory with a kernel ?

`local_sum (generic function with 1 method)`

Portable Computing Language

cpu-haswell-AMD EPYC 7763 64-Core Processor

global_len = 16

local_len = 16

Blocked sum

(OpenCL = 8.81811, Classical = 8.81811)

```
block_local_sum(block_global_len, block_local_len, factor)
```

```
CL_KERNEL_WORK_GROUP_SIZE                    | 4096
CL_KERNEL_COMPILE_WORK_GROUP_SIZE            | (0, 0, 0)
CL_KERNEL_LOCAL_MEM_SIZE                     | 0 bytes
CL_KERNEL_PRIVATE_MEM_SIZE                   | 0 bytes
CL_KERNEL_PREFERRED_WORK_GROUP_SIZE_MULTIPLE | 8
Send command from host to device   | 1.212 µs
Including data transfer            | 33.439 ms
Execution of kernel                | 19.877 µs
```

How to reduce the amount of `barrier` synchronizations ?

Was it beneficial in terms of performance for GPUs like in the case of OpenMP ?

`block_local_sum (generic function with 1 method)`

Portable Computing Language

cpu-haswell-AMD EPYC 7763 64-Core Processor

block_global_len = 16

block_local_len = 16

factor = 16

Back to SIMD

- Also called Single Instruction Multiple Threads (SIMT)
- CUDA Warp : width of 32 threads
- AMD wavefront : width of 64 threads
- In general : `CL_KERNEL_PREFERRED_WORK_GROUP_SIZE_MULTIPLE`
- Consecutive `get_local_id()` starting from 0
    - So the thread of local id from 0 to 31 are in the same CUDA warp.
- Threads execute the **same instruction** at the same time so no need for `barrier`.

Warp divergence

Suppose a kernel is executed on a nvidia GPU with `global_size` threads. How much time will it take to execute it ?

```
__kernel void diverge(n)
{
  int item = get_local_id(0);
  if (item < n) {
    do_task_A(); // `a` ns
  } else {
    do_task_B(); // `b` ns
  }
}
```

▶ **How much time will it take to execute it if `global_size` is 32 and `n` is 16 ?**

▶ **How much time will it take to execute it if `global_size` is 64 and `n` is 32 ?**

Are the threads that are still active in the same warp for you sum example ?

Warp diversion for our sum

▶ **We are still using different warps until the end. Is that a good thing ?**

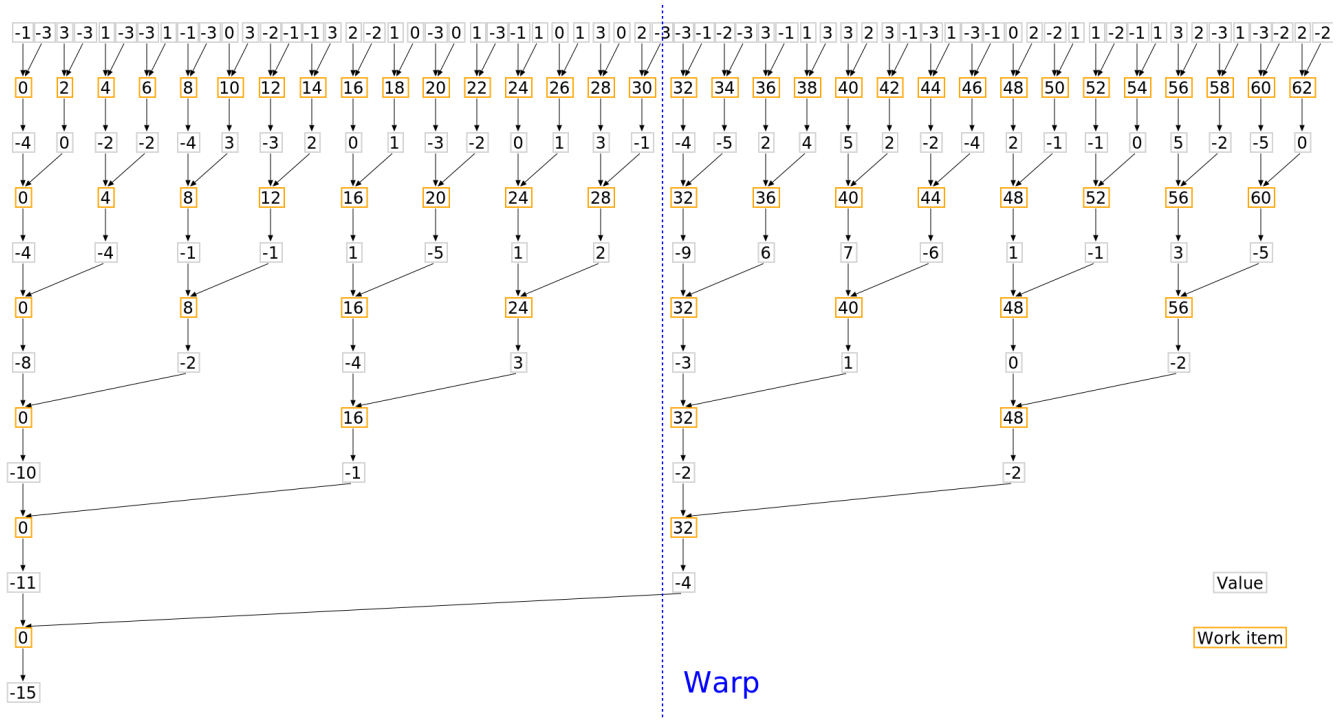

How should we change the sum to keep the working threads on the same warp ?

No warp divergence

Now the same warp is used for all threads so we don't need `barrier` and it frees other warps to stay idle (reducing power consumption) or do other tasks.

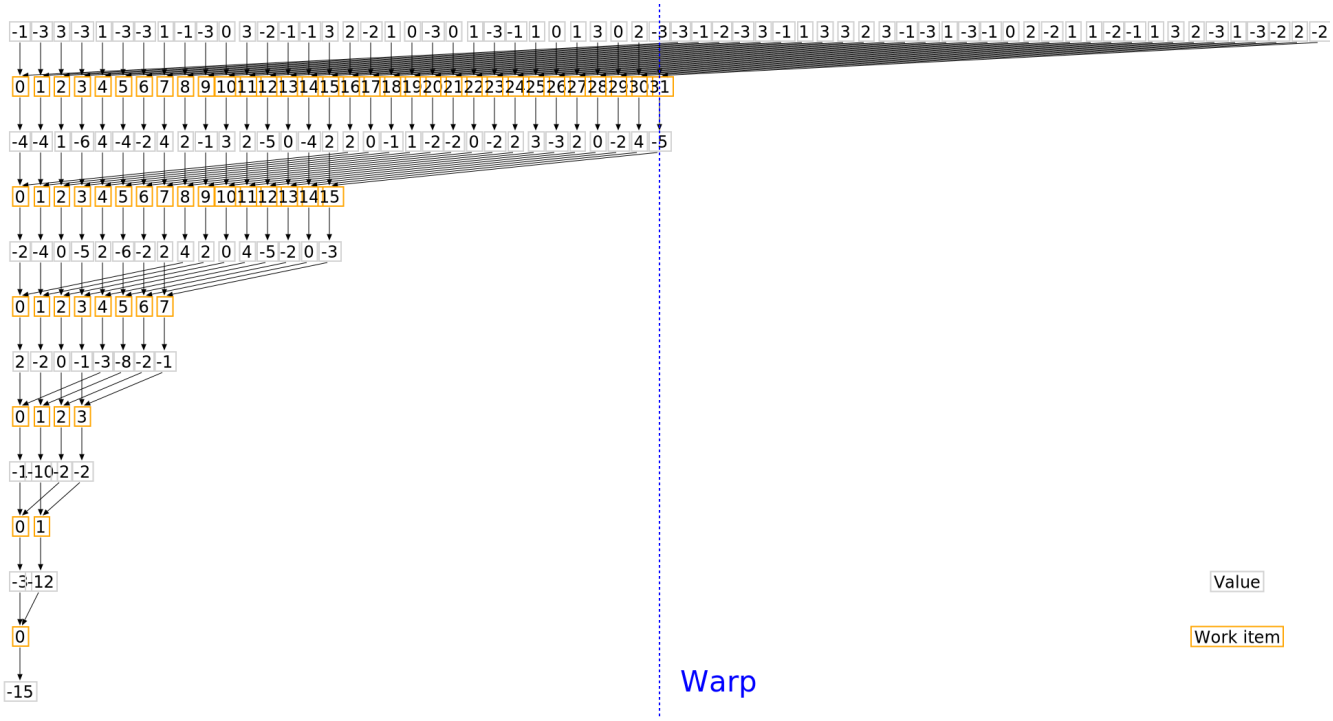

Reordered local sum

```
__kernel void local_sum(__local float* shared)
{
  int items = get_local_size(0);
  int item = get_local_id(0);
  int stride = items / 2;
  float other_val = 0;
  while (stride > 0) {
    barrier(CLK_LOCAL_MEM_FENCE);
    if (item < stride) {
      other_val = 0;
      if (item + stride < items)
        other_val = shared[item+stride];
      shared[item] += other_val;
    }
    stride /= 2;
  }
}
```

▶ (OpenCL = 8.81811, Classical = 8.81811)

```
CL_KERNEL_WORK_GROUP_SIZE                    | 4096
CL_KERNEL_COMPILE_WORK_GROUP_SIZE            | (0, 0, 0)
CL_KERNEL_LOCAL_MEM_SIZE                     | 0 bytes
CL_KERNEL_PRIVATE_MEM_SIZE                   | 0 bytes
CL_KERNEL_PREFERRED_WORK_GROUP_SIZE_MULTIPLE | 8
Send command from host to device   | 561.000 ns
Including data transfer            | 29.222 ms
Execution of kernel                | 18.714 µs
```

Portable Computing Language

cpu-haswell-AMD EPYC 7763 64-Core Processor

reordered_global_size = 16

reordered_local_size = 16

SIMT sum

```
__kernel void simt_sum(volatile __local float* shared)
{
  int items = get_local_size(0);
  int item = get_local_id(0);
  barrier(CLK_LOCAL_MEM_FENCE);
  while (items > 1) {
    items /= 2;
    shared[item] += shared[item + items];
  }
}
```

(OpenCL = 2.52133, Classical = 8.81811)

```
local_sum(simt_global_size, simt_local_size, simt_code, simt_device)
```

```
CL_KERNEL_WORK_GROUP_SIZE                    | 4096
CL_KERNEL_COMPILE_WORK_GROUP_SIZE            | (0, 0, 0)
CL_KERNEL_LOCAL_MEM_SIZE                     | 0 bytes
CL_KERNEL_PRIVATE_MEM_SIZE                   | 0 bytes
CL_KERNEL_PREFERRED_WORK_GROUP_SIZE_MULTIPLE | 8
Send command from host to device   | 491.000 ns
Including data transfer            | 24.678 ms
Execution of kernel                | 18.104 µs
```

Why don't we check any condition on `item`, aren't some thread computing data that won't be used ?

Portable Computing Language

cpu-haswell-AMD EPYC 7763 64-Core Processor

simt_global_size = 16

simt_local_size = 16

Beware!

POCL does not synchronize, even for `simt_len <= 8`

Why do we need `volatile` ?

Unrolled sum

How to get even faster performance by assuming that `items` is a power of 2 smaller than 512 and that the SIMT width is 32 ?

(OpenCL = 2.52133, Classical = 8.81811)

```
local_sum(unrolled_global_size, unrolled_local_size, unrolled_code, unrolled_device)
```

```
CL_KERNEL_WORK_GROUP_SIZE                    | 4096
CL_KERNEL_COMPILE_WORK_GROUP_SIZE            | (0, 0, 0)
CL_KERNEL_LOCAL_MEM_SIZE                     | 0 bytes
CL_KERNEL_PRIVATE_MEM_SIZE                   | 0 bytes
CL_KERNEL_PREFERRED_WORK_GROUP_SIZE_MULTIPLE | 8
Send command from host to device   | 351.000 ns
Including data transfer            | 30.665 ms
Execution of kernel                | 19.887 µs
```

How to have portable code using unrolling ?

Portable Computing Language

cpu-haswell-AMD EPYC 7763 64-Core Processor

unrolled_global_size = 16

unrolled_local_size = 16

Utils

_pretty_time (generic function with 1 method)

```
_pretty_time(x) = BenchmarkTools.prettytime(minimum(x))
```

```
timed_clcall (generic function with 1 method)
```

```julia
function timed_clcall(kernel, args...; kws...)
    info = cl.work_group_info(kernel, cl.device())
    # See https://registry.khronos.org/OpenCL/sdk/3.0/docs/man/html/clGetKernelWorkGroupInfo.html
    println("CL_KERNEL_WORK_GROUP_SIZE                    | ", info.size)
    println("CL_KERNEL_COMPILE_WORK_GROUP_SIZE            | ", info.compile_size)
    println("CL_KERNEL_LOCAL_MEM_SIZE                     | ", BenchmarkTools.prettymemory(info.local_mem_size))
    println("CL_KERNEL_PRIVATE_MEM_SIZE                   | ", BenchmarkTools.prettymemory(info.private_mem_size))
    println("CL_KERNEL_PREFERRED_WORK_GROUP_SIZE_MULTIPLE | ", info.prefered_size_multiple)

    # ':profile' sets 'CL_QUEUE_PROFILING_ENABLE' to the command queue
    queued_submit = Float64[]
    submit_start = Float64[]
    start_end = Float64[]
    cl.queue!(:profile) do
        for _ in 1:num_runs
            evt = clcall(kernel, args...; kws...)
            wait(evt)

            # See https://registry.khronos.org/OpenCL/sdk/3.0/docs/man/html/clGetEventProfilingInfo.html
            push!(queued_submit, evt.profile_submit - evt.profile_queued)
            push!(submit_start, evt.profile_start - evt.profile_submit)
            push!(start_end, evt.profile_end - evt.profile_start)
        end
    end
    println("Send command from host to device  | $(_pretty_time(queued_submit))")
    println("Including data transfer           | $(_pretty_time(submit_start))")
    println("Execution of kernel               | $(_pretty_time(start_end))")
end
```

num_runs = 1

```julia
using OpenCL, pocl_jll # 'pocl_jll' provides the POCL OpenCL platform for CPU devices
```

```julia
using SimpleClang, PlutoUI, PlutoUI.ExperimentalLayout, HypertextLiteral, Luxor, @htl_, StaticArrays, BenchmarkTools, PlutoTeachingTools
```

```julia
import Random, PlutoPlotly, PlotlyBase
```

```
img (generic function with 3 methods)
```

```
CenteredBoundedBox (generic function with 1 method)

boxed (generic function with 1 method)
```