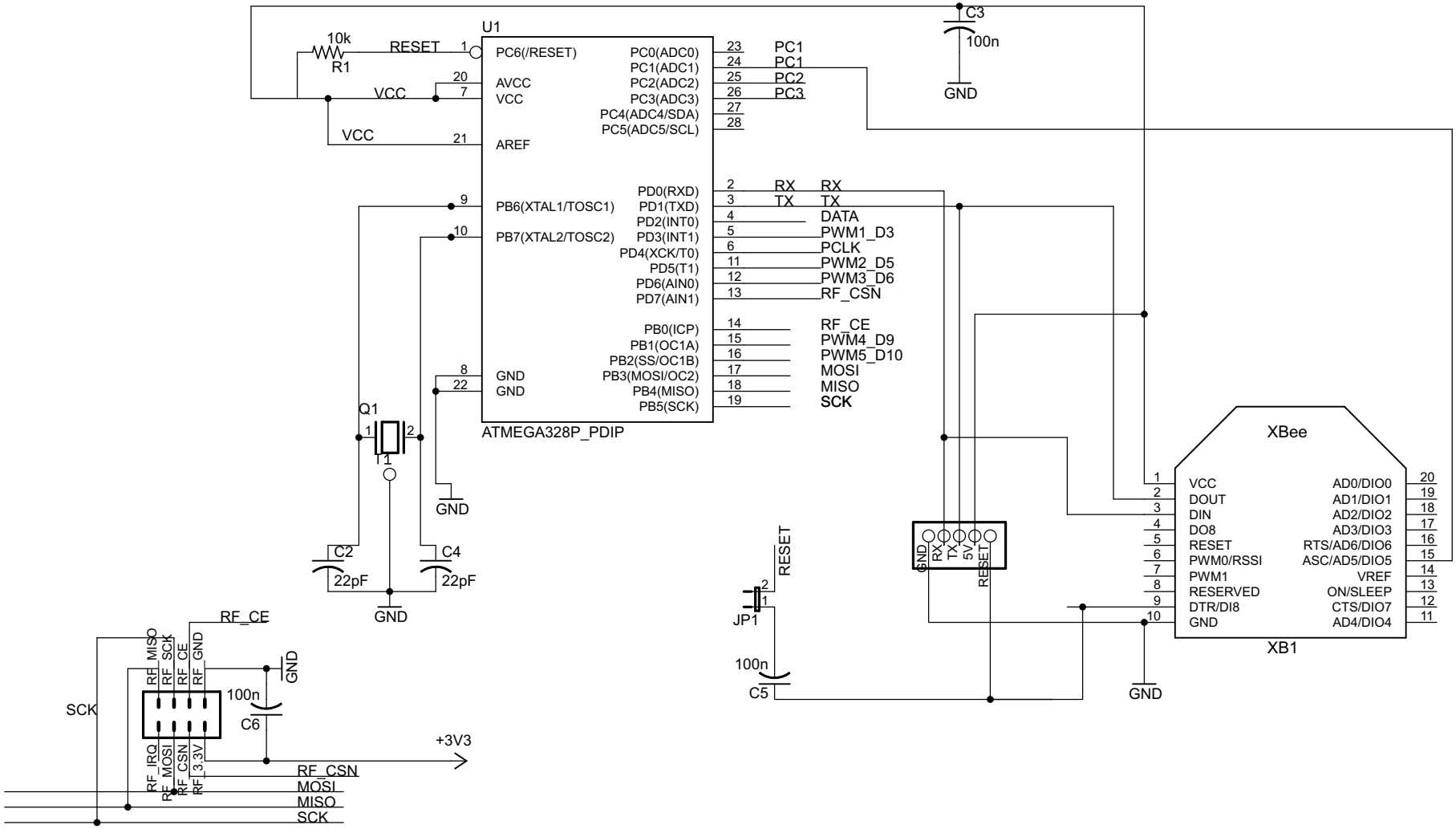

Arduino Based *Bee based on nRF24l01

TITLE: kombee

Document Number:
http://www.komby.com/kombee

REV: 0.1r3

Date: 2/7/2014 11:55:25 PM

Sheet: 1/1

This work is licensed under a Creative Commons Attribution-ShareAlike 3.0 United States License.