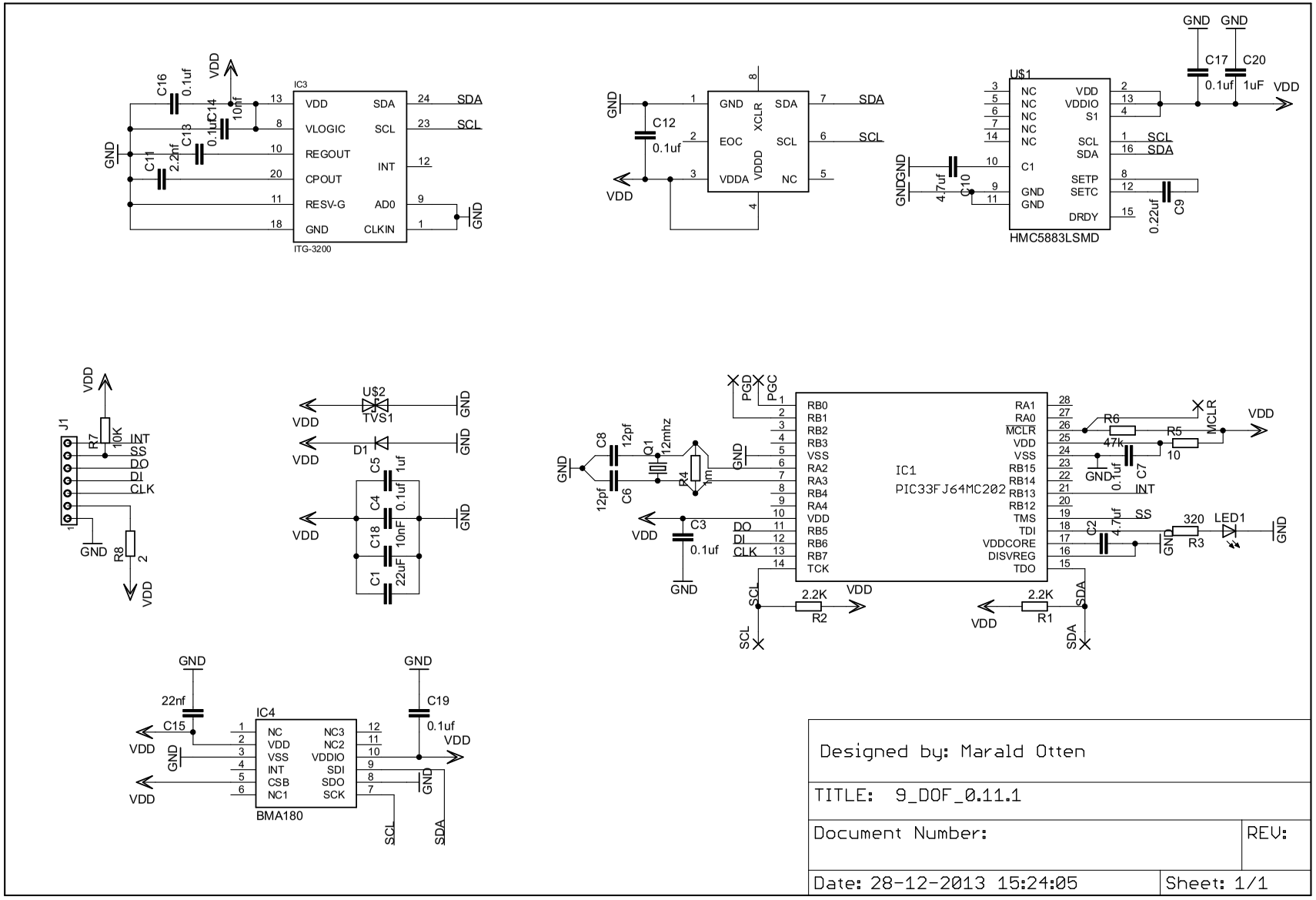

Designed by: Marald Otten

TITLE: 9_DOF_0.11.1

Document Number:

REV:

Date: 28-12-2013 15:24:05

Sheet: 1/1