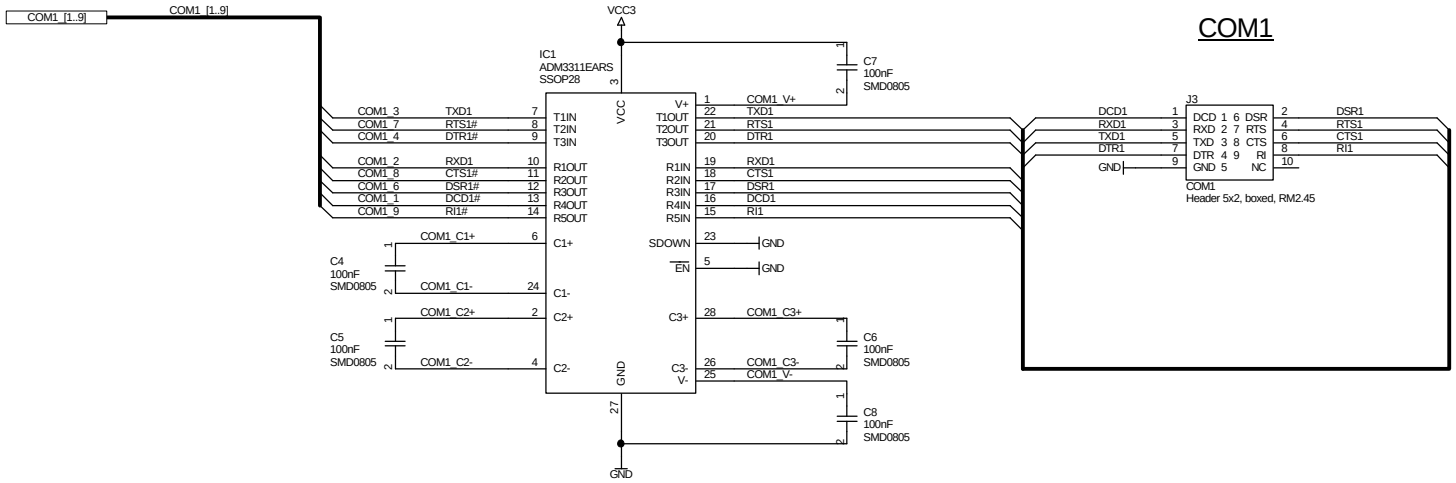

SSV Software Systems GmbH

Heisterbergallee 72, D-30453 Hannover, Phone: +(49)-511-40000-0, FAX: -40

CCC/1: COM1	REV 1.0	4 / 8	29-Aug-2002

D:\ENTWICKL.UNG\Diverses\Chaos Computer Club\Rev 1.0\Schaltplan\CCC1_04.sch