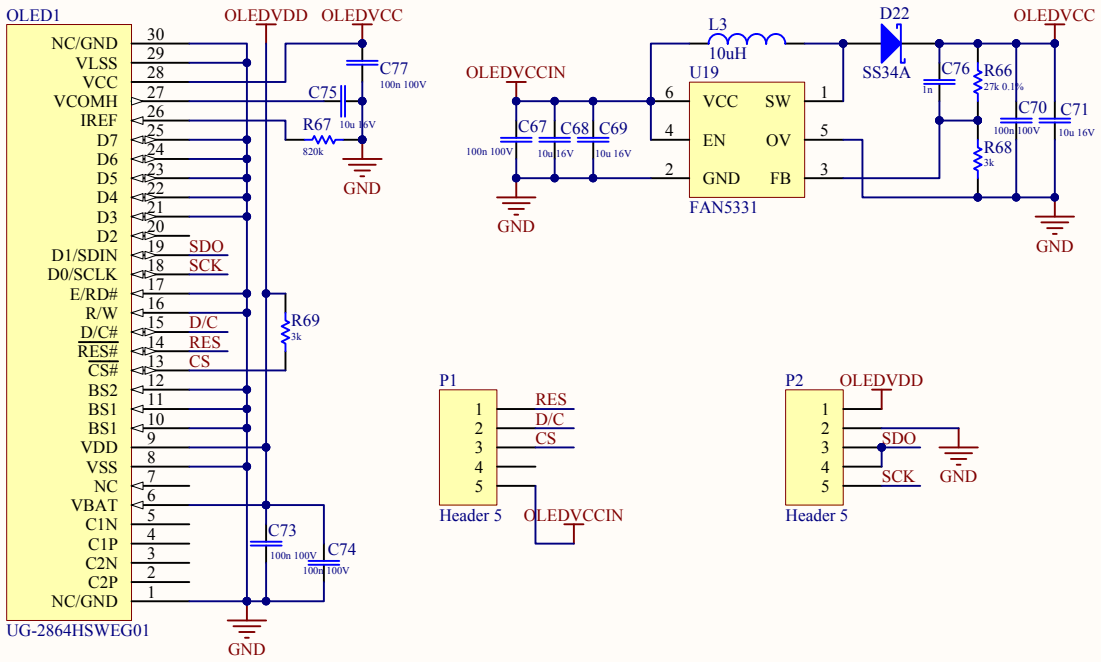

Title		
Size A4	Number	Revision
Date: 14.1.2015 г.		Sheet of
File: C:\Users\..\UniSolder52_OLED.SchDoc		Drawn By: