ATmega328P-AU

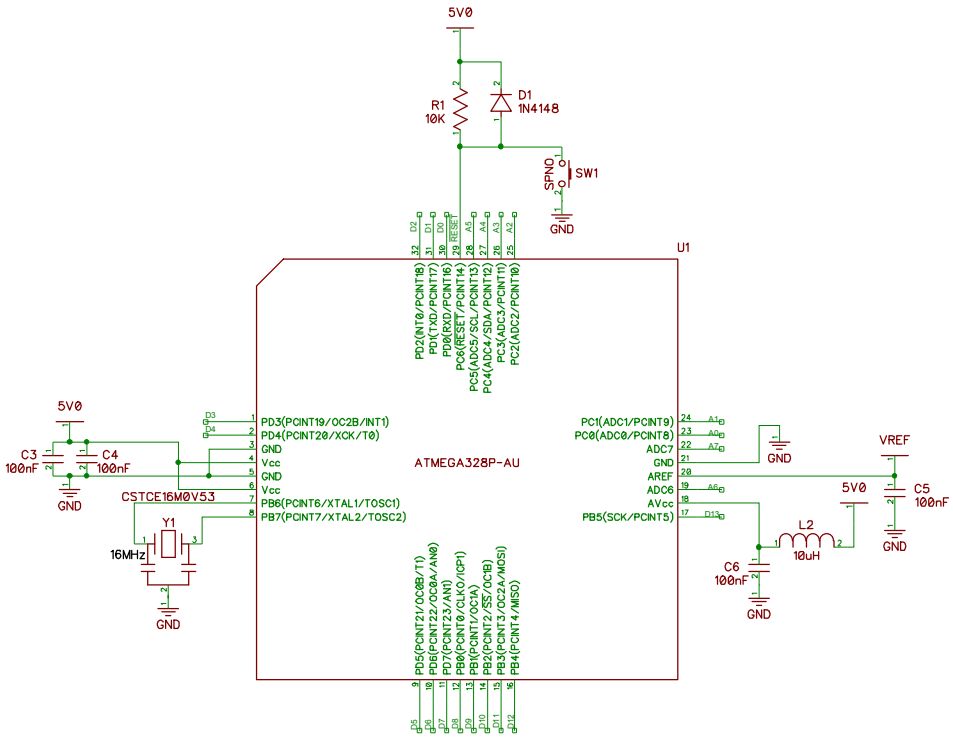

Breakout Headers

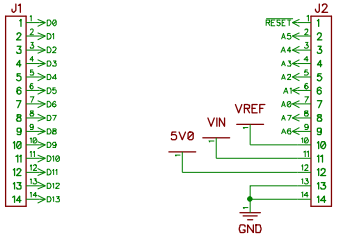

Indicator LED

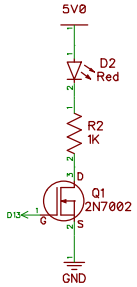

Voltage Regulation

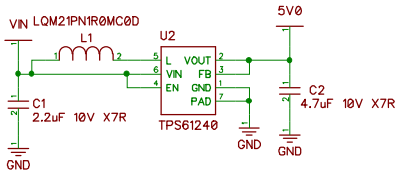

VIN (MIN) = 2.3 V

VIN (MAX) = 5.0 V (up to 5.5V but output follows)

IQ = 30 uA

Fiducials & Labels

FTDI Header

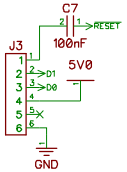

Title: MINI-ULTRA-16M	Rocket Scream
Date: 08-06-2015	Revision: 1.30
MINI-ULTRA-16M-1R30.dch	Sheet 1