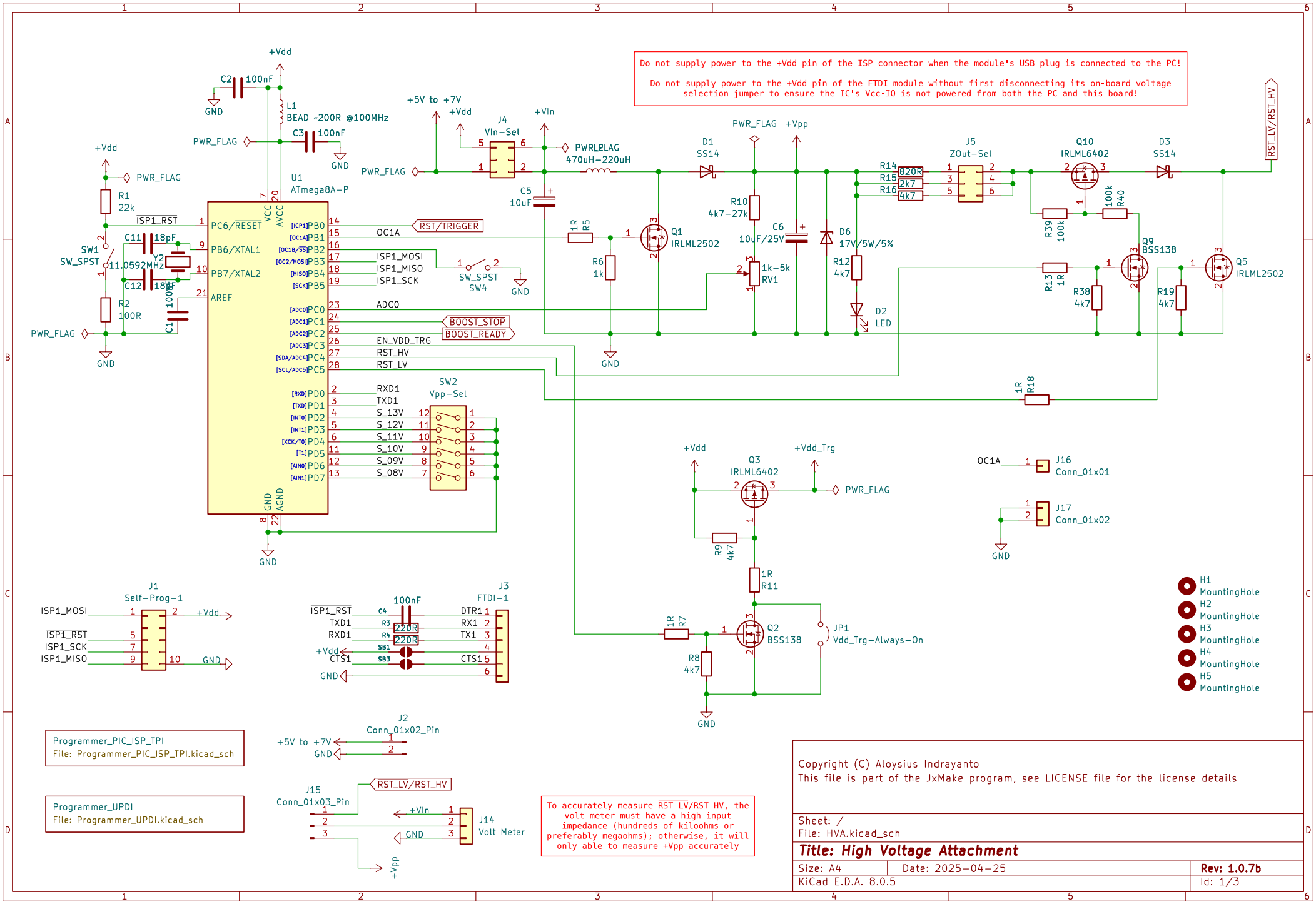

Copyright (C) Aloysius Indrayanto
This file is part of the JxMake program, see LICENSE file for the license details

Sheet: /
File: HVA.kicad_sch

Title: High Voltage Attachment

Size: A4	Date: 2025-04-25	Rev: 1.0.7b
KiCad E.D.A. 8.0.5		Id: 1/3

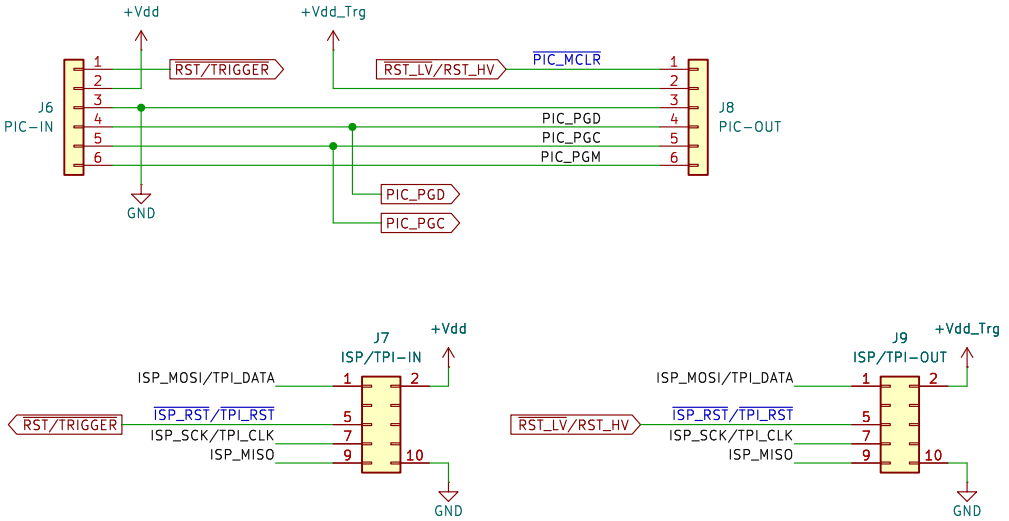

Copyright (C) Aloysius Indrayanto
This file is part of the JxMake program, see LICENSE file for the license details

Sheet: /Programmer_PIC_ISP_TPI/
File: Programmer_PIC_ISP_TPI.kicad_sch

Title: High Voltage Attachment

Size: A4	Date: 2025-04-25	**Rev: 1.0.7b**
KiCad E.D.A. 8.0.5		Id: 2/3

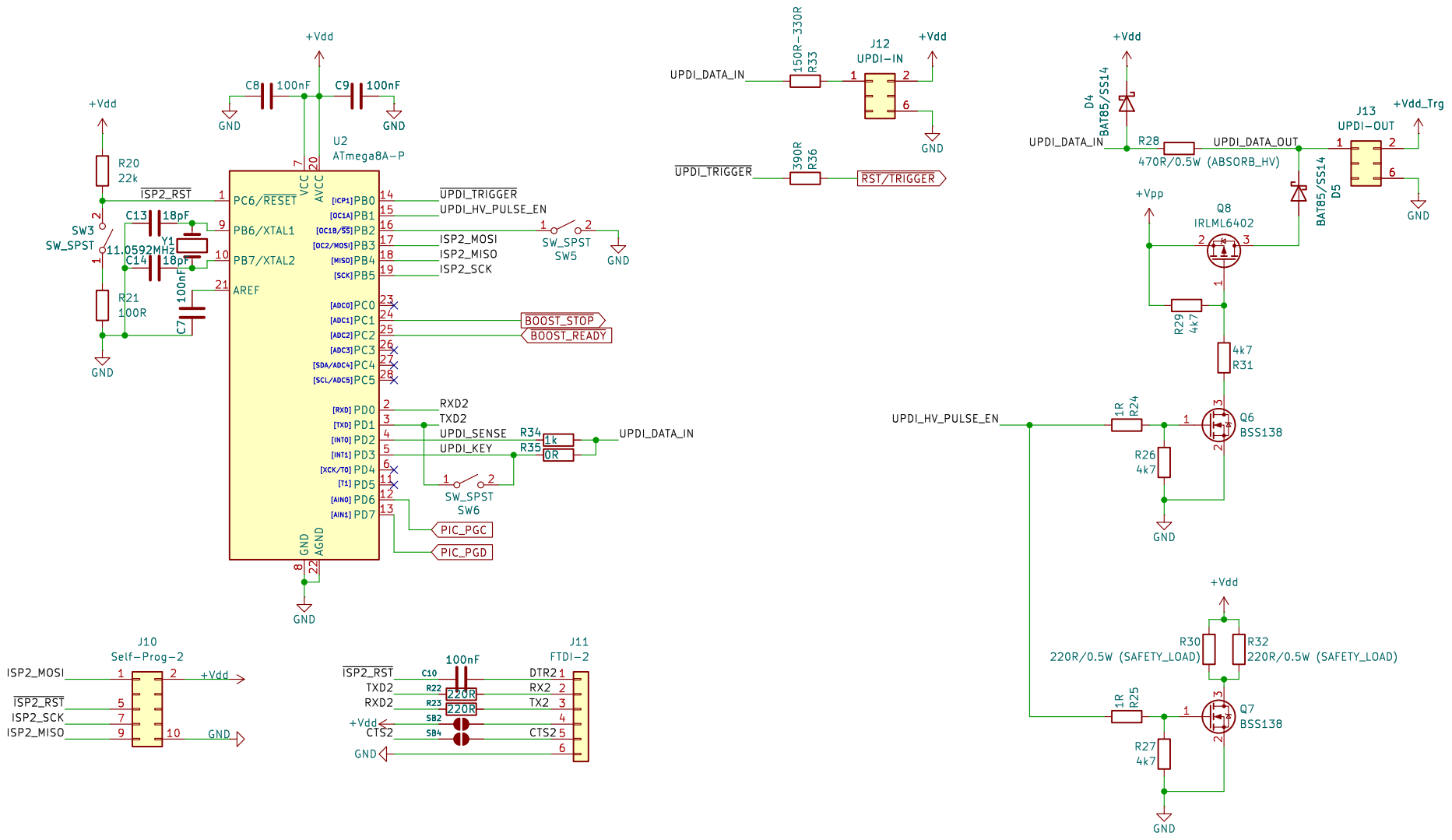

Do not supply power to the +Vdd pin of the ISP connector when the module's USB plug is connected to the PC!

Do not supply power to the +Vdd pin of the FTDI module without first disconnecting its on-board voltage selection jumper to ensure the IC's Vcc-IO is not powered from both the PC and this board!

Copyright (C) Aloysius Indrayanto
This file is part of the JxMake program, see LICENSE file for the license details

Sheet: /Programmer_UPDI/
File: Programmer_UPDI.kicad_sch

Title: High Voltage Attachment

Size: A4	Date: 2025-04-25	Rev: 1.0.7b
KiCad E.D.A. 8.0.5		Id: 3/3