Boost_Converter
File: Boost_Converter.kicad_sch

Analog_Switch
File: Analog_Switch.kicad_sch

Controller
File: Controller.kicad_sch

Mainboard
File: Mainboard.kicad_sch

**JX* and JS* are soldered horizontally at the corresponding PCB edge, with JS* serving as stabilizers.**

**JB* and JH* are soldered normally and serve as the receptacles for the corresponding JX* and JS*.**

**Please freely decide which ones use male 2xN headers and which ones use female 2xN headers.**

**The DIP ICs are socketed.**

**The socket pins are bent and soldered as if they were SMD. The pins may need to be trimmed for a proper fit.**

**Test each module individually before connecting them together.**

**Ensure all special jumpers and test points are checked. See the individual pages for detailed information.**

Copyright (C) Aloysius Indrayanto
This file is part of the JxMake program, see LICENSE file for the license details

Sheet: /
File: HVA.kicad_sch

***Title: High Voltage Attachment II***

| | | |
|---|---|---|
| Size: A4 | Date: 2025-07-22 | **Rev: 1.1.7** |
| KiCad E.D.A. 8.0.5 | | Id: 1/5 |

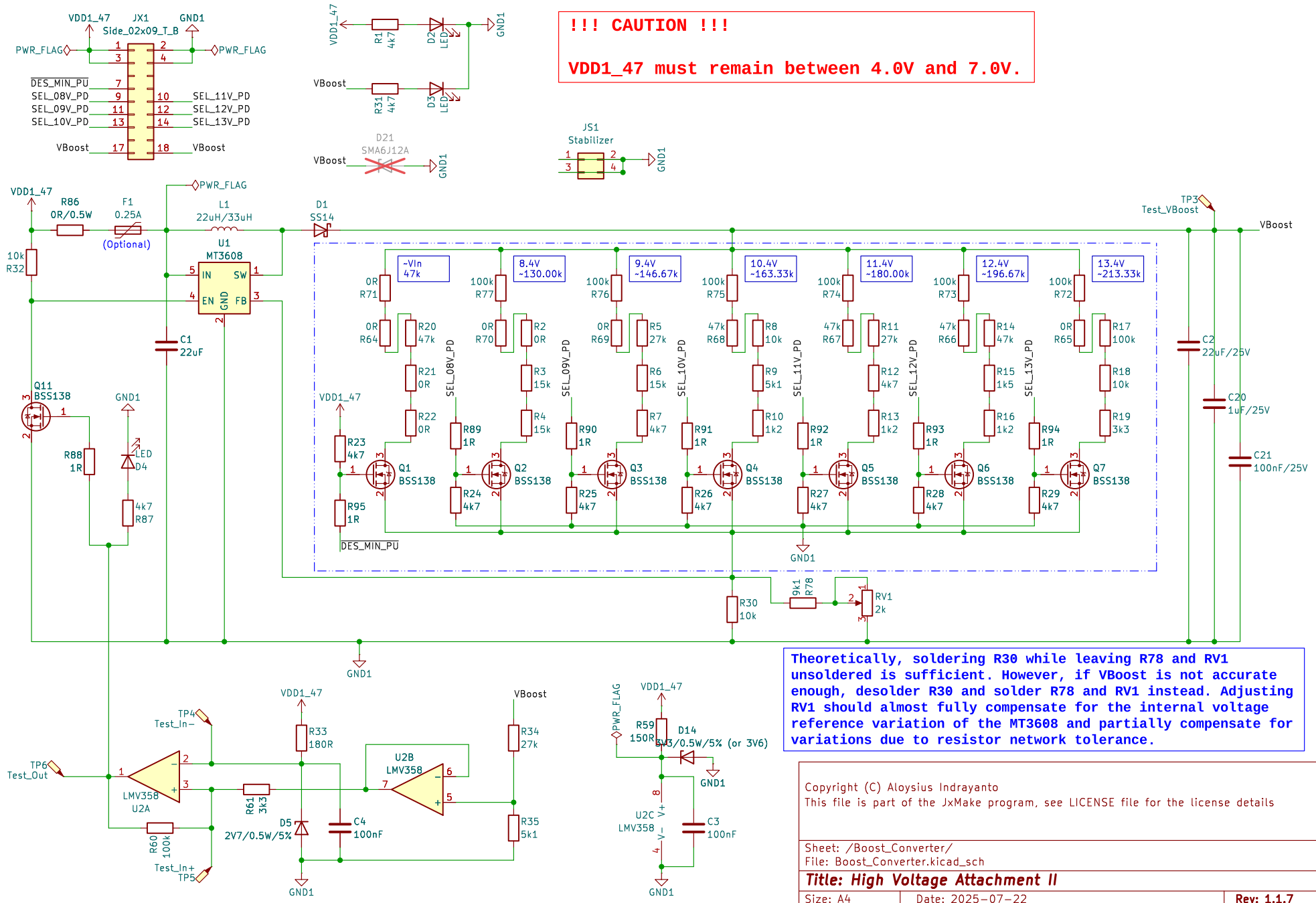


Theoretically, soldering R30 while leaving R78 and RV1 unsoldered is sufficient. However, if VBoost is not accurate enough, desolder R30 and solder R78 and RV1 instead. Adjusting RV1 should almost fully compensate for the internal voltage reference variation of the MT3608 and partially compensate for variations due to resistor network tolerance.

Copyright (C) Aloysius Indrayanto
This file is part of the JxMake program, see LICENSE file for the license details

Sheet: /Boost_Converter/
File: Boost_Converter.kicad_sch

**Title: High Voltage Attachment II**

| | | |
|---|---|---|
| Size: A4 | Date: 2025-07-22 | Rev: 1.1.7 |
| KiCad E.D.A. 8.0.5 | | Id: 2/5 |

**!!! CAUTION !!!**

**VDD2 must remain between 3.3V and 5.5V.**
**VDD2_47 must remain between 4.0V and 7.0V.**

**The DG411DY has active-low control pins (IN1, IN2, IN3, IN4).**

**The DG412DY has active-high control pins (IN1, IN2, IN3, IN4).**

**This module uses the DG412DY by default. You can replace it with the DG411DY and modify JP1 accordingly. The firmware will automatically detect the selected configuration.**

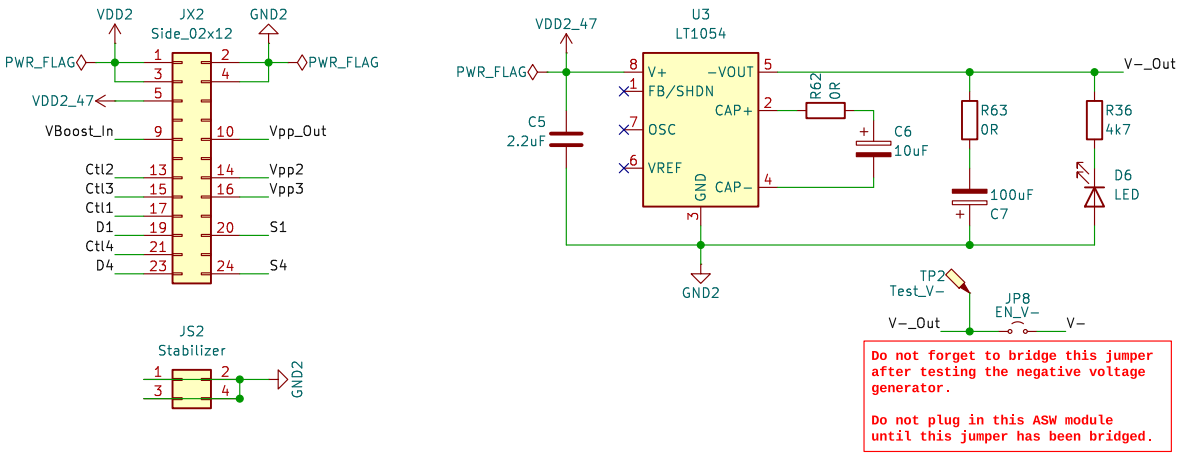


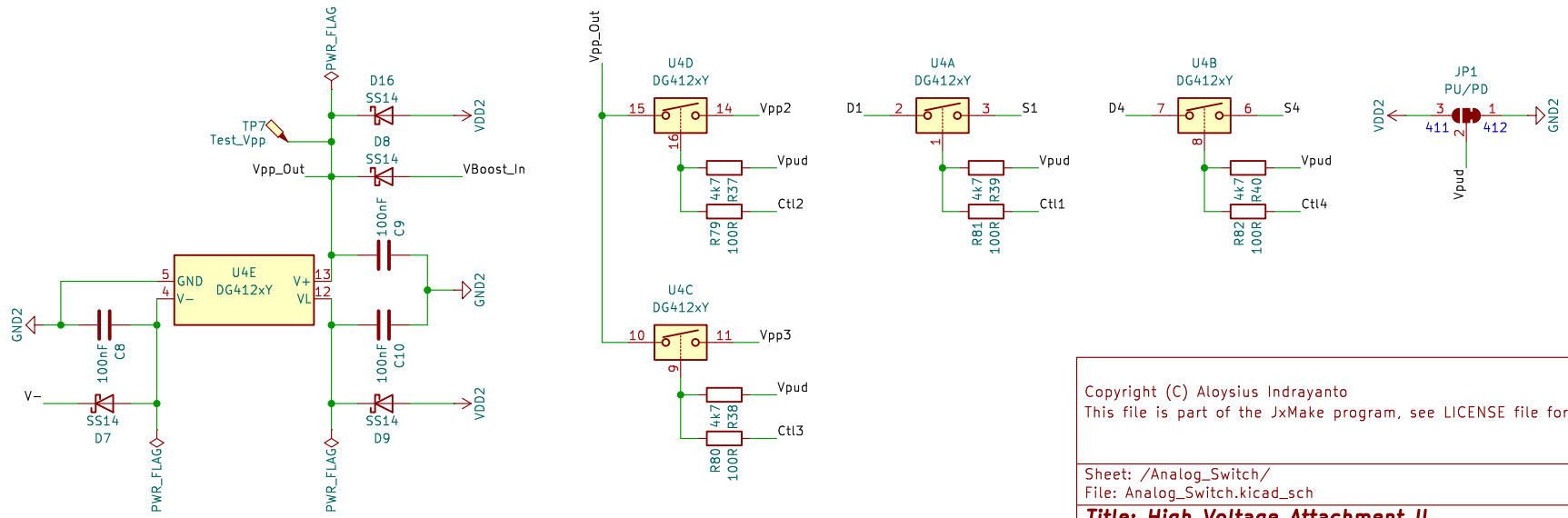


Copyright (C) Aloysius Indrayanto
This file is part of the JxMake program, see LICENSE file for the license details

Sheet: /Analog_Switch/
File: Analog_Switch.kicad_sch

**Title: High Voltage Attachment II**

| | | |
|---|---|---|
| Size: A4 | Date: 2025-07-22 | Rev: 1.1.7 |
| KiCad E.D.A. 8.0.5 | | Id: 3/5 |

**!!! CAUTION !!!**

**VDD3 must remain between 3.3V and 5.5V.**

**Only one power source should be connected at a time:**

1. **From the upstream board sockets via the mainboard.**
2. **From the ISP socket.**
3. **From the USB-to-serial converter socket.**

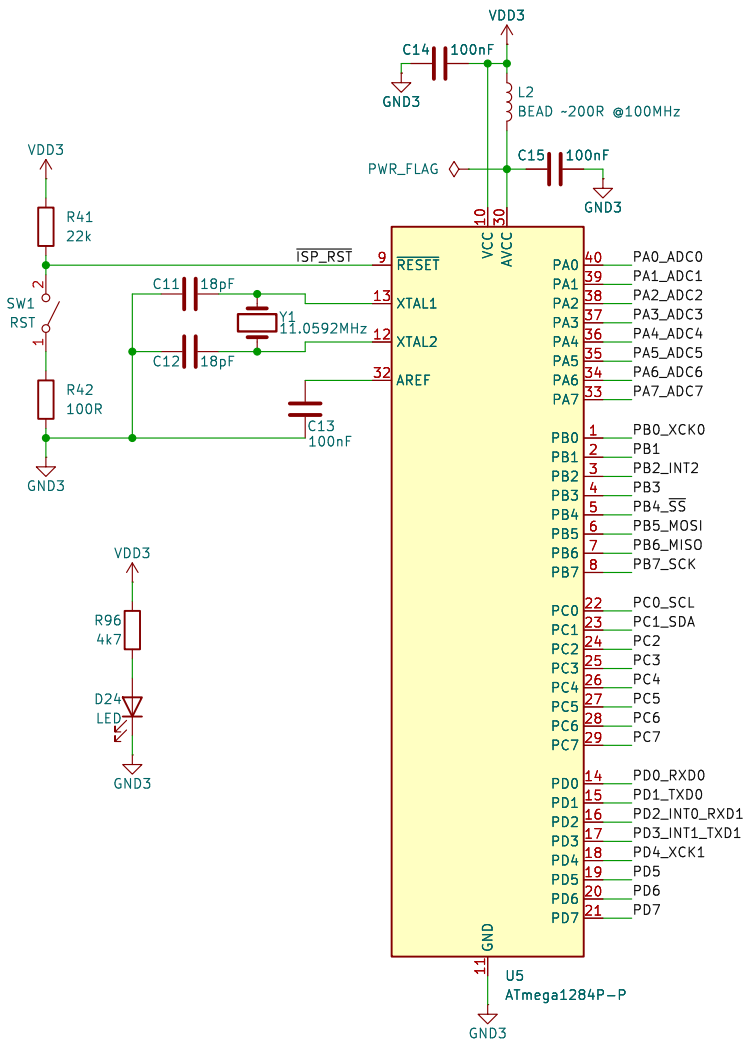


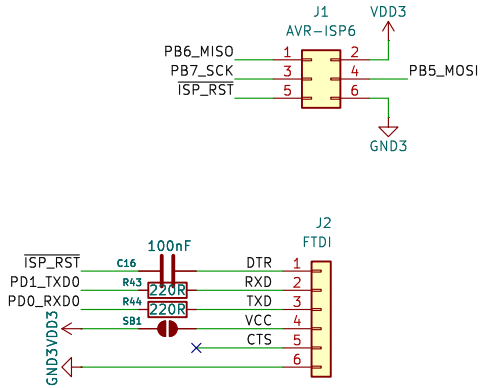


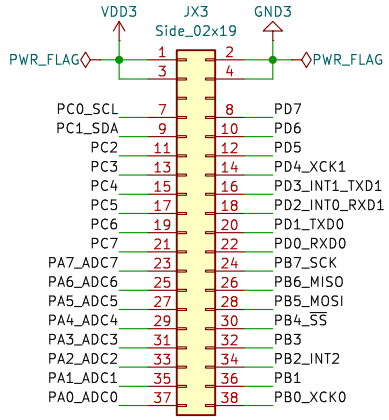


Copyright (C) Aloysius Indrayanto
This file is part of the JxMake program, see LICENSE file for the license details

Sheet: /Controller/
File: Controller.kicad_sch

**Title: High Voltage Attachment II**

| | | |
|---|---|---|
| Size: A4 | Date: 2025-07-22 | **Rev: 1.1.7** |
| KiCad E.D.A. 8.0.5 | | Id: 4/5 |

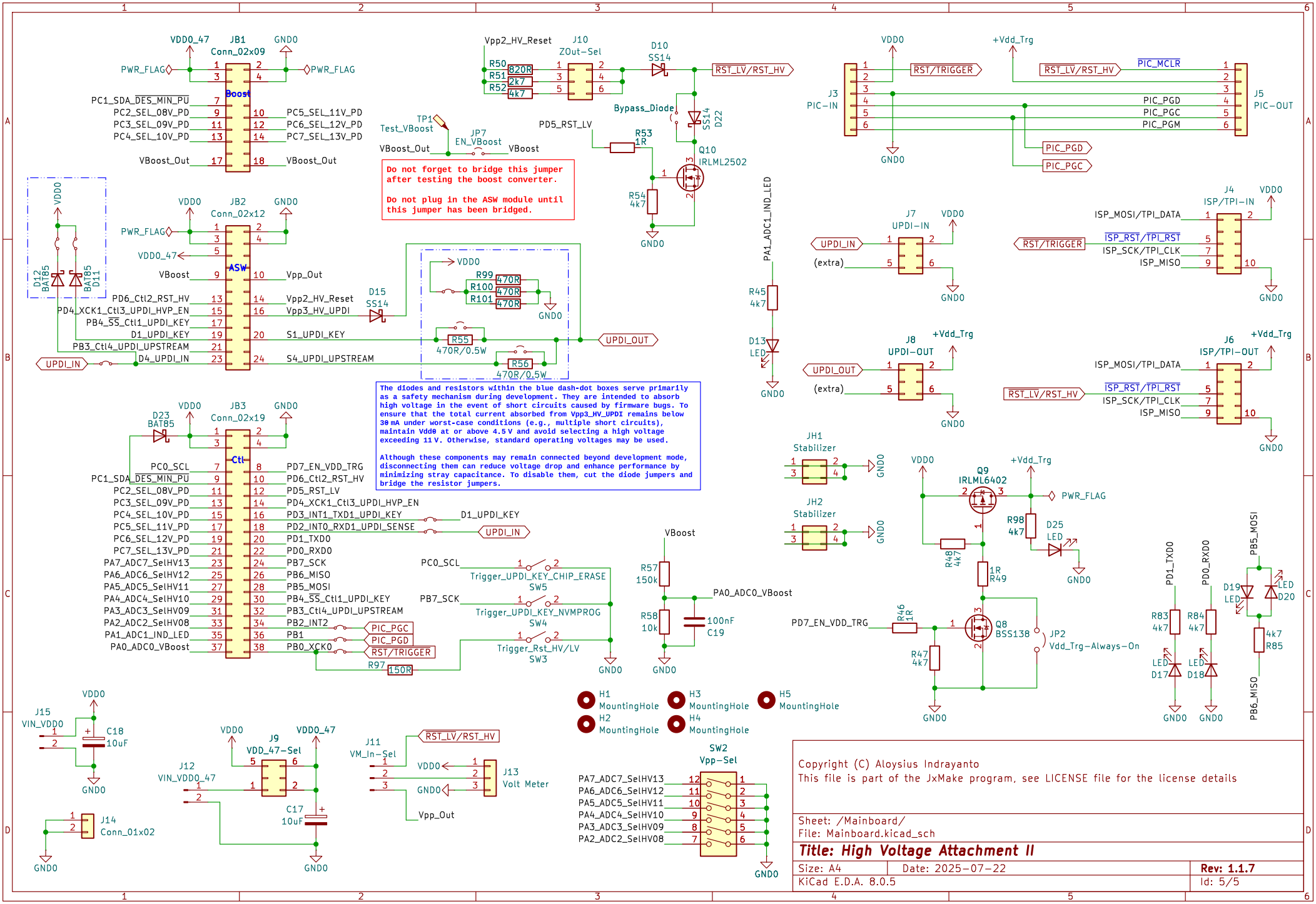


Copyright (C) Aloysius Indrayanto
This file is part of the JxMake program, see LICENSE file for the license details

Sheet: /Mainboard/
File: Mainboard.kicad_sch

**Title: High Voltage Attachment II**

| | | |
|---|---|---|
| Size: A4 | Date: 2025-07-22 | Rev: 1.1.7 |
| KiCad E.D.A. 8.0.5 | | Id: 5/5 |