GPIO Number	PWM Channel	ADC Channel	ATxmega128A4U Pin
0	0	0	PA.0 (ADC0) PC.0 (OC0A)
1	1	1	PA.1 (ADC1) PC.1 (OC0B)
2	2	2	PA.2 (ADC2) PC.2 (OC0C)
3	3	3	PA.3 (ADC3) PC.3 (OC0D)
4	N/A	4	PA.4 (ADC4)
5	N/A	5	PA.5 (ADC5)
6	N/A	6	PA.6 (ADC6)
7	N/A	7	PA.7 (ADC7)

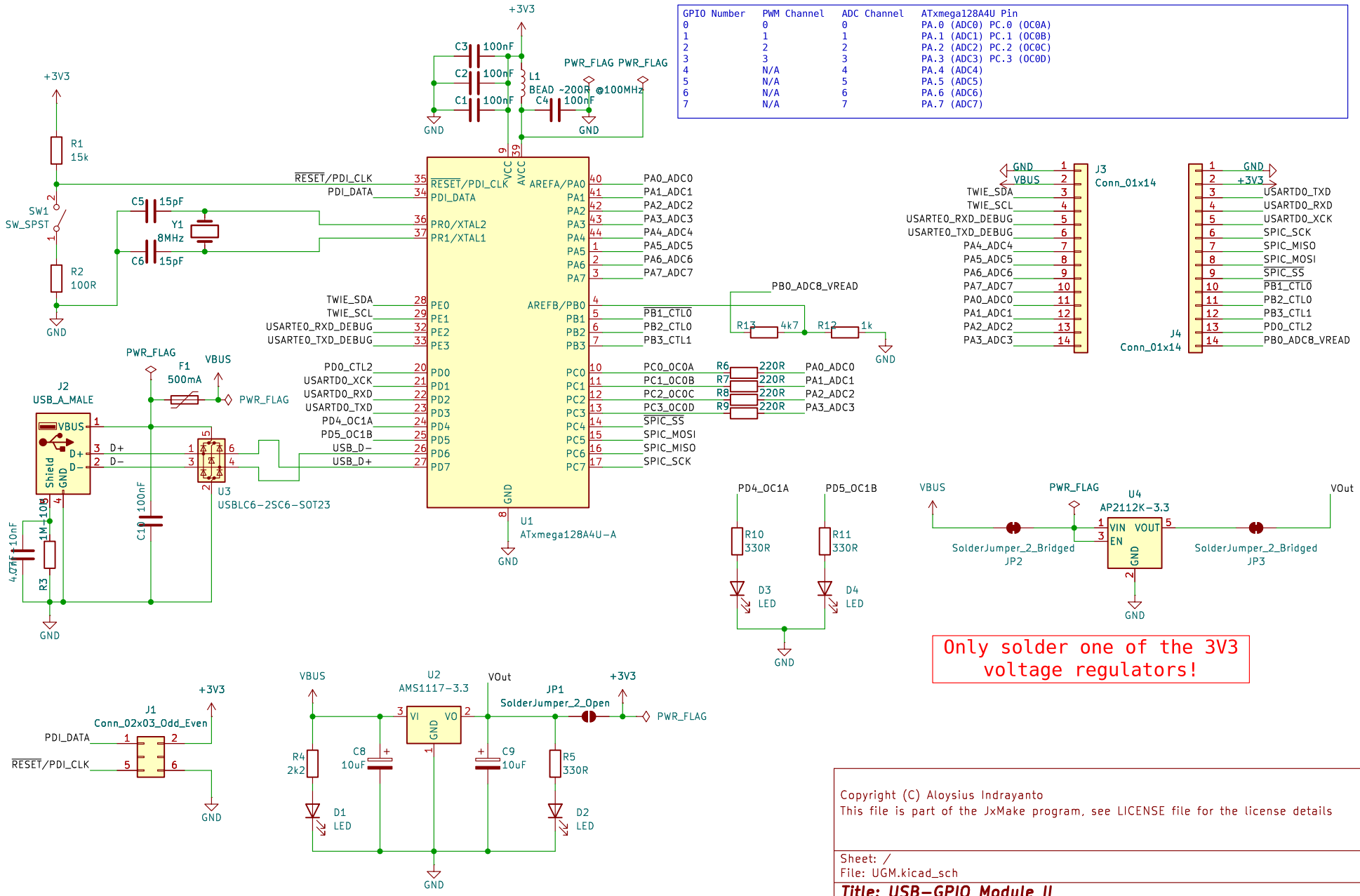

Copyright (C) Aloysius Indrayanto
This file is part of the JxMake program, see LICENSE file for the license details

Sheet: /
File: UGM.kicad_sch

Title: USB−GPIO Module II

Size: A4	Date: 2025−08−04	**Rev: 1.0.8**
KiCad E.D.A. 8.0.5		Id: 1/1