Main
File: Main.kicad_sch

AVR_Programmer
File: AVR_Programmer.kicad_sch

SWD_SWIM_PIC_Programmer
File: SS_PIC_Programmer.kicad_sch

H1
MountingHole
H2
MountingHole
H3
MountingHole
H4
MountingHole
H5
MountingHole
H6
MountingHole
H7
MountingHole

Copyright (C) Aloysius Indrayanto
This file is part of the JxMake program, see LICENSE file for the license details

Sheet: /
File: VMP.kicad_sch

Title: Versatile MCU Programmer

Size: A4	Date: 2025-04-30	**Rev: 1.2.0a**
KiCad E.D.A. 8.0.5		Id: 1/4

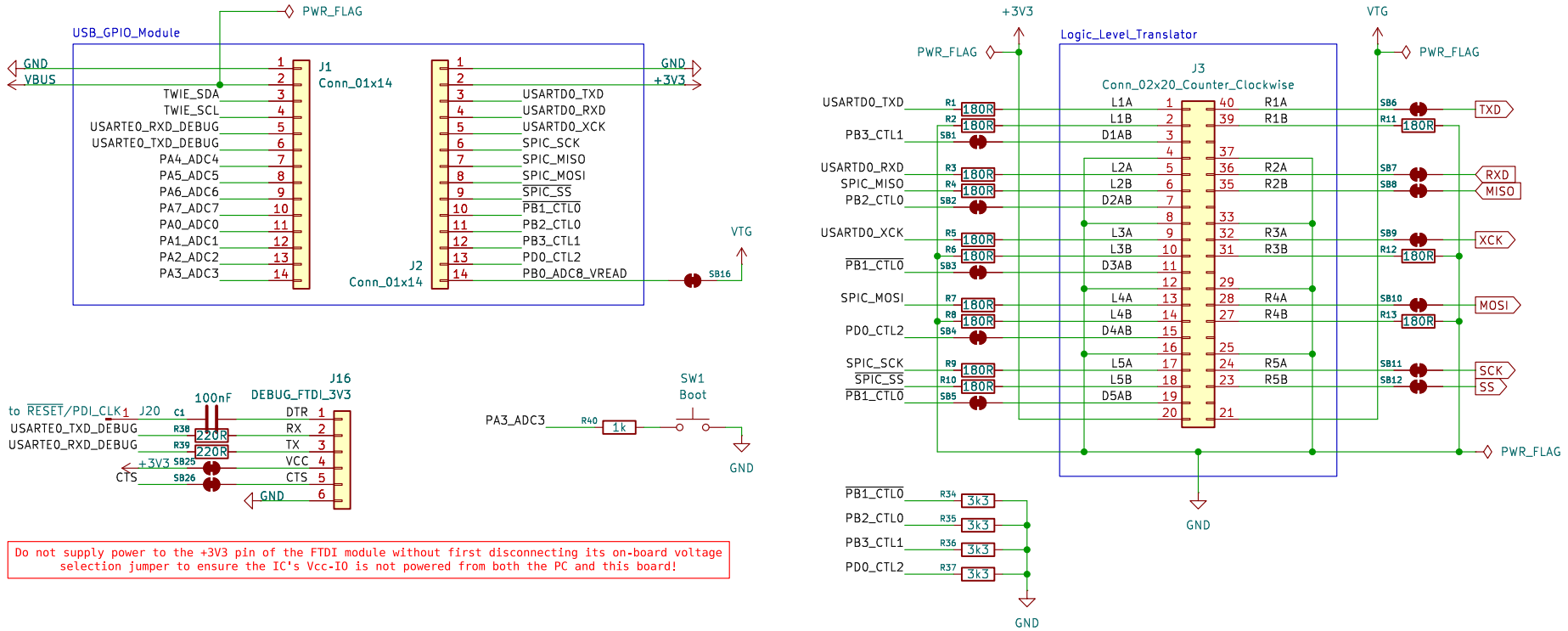

Do not supply power to the +3V3 pin of the FTDI module without first disconnecting its on-board voltage selection jumper to ensure the IC's Vcc-IO is not powered from both the PC and this board!

Copyright (C) Aloysius Indrayanto
This file is part of the JxMake program, see LICENSE file for the license details

Sheet: /Main/
File: Main.kicad_sch

Title: Versatile MCU Programmer

Size: A4	Date: 2025-04-30	Rev: 1.2.0a
KiCad E.D.A. 8.0.5		Id: 2/4

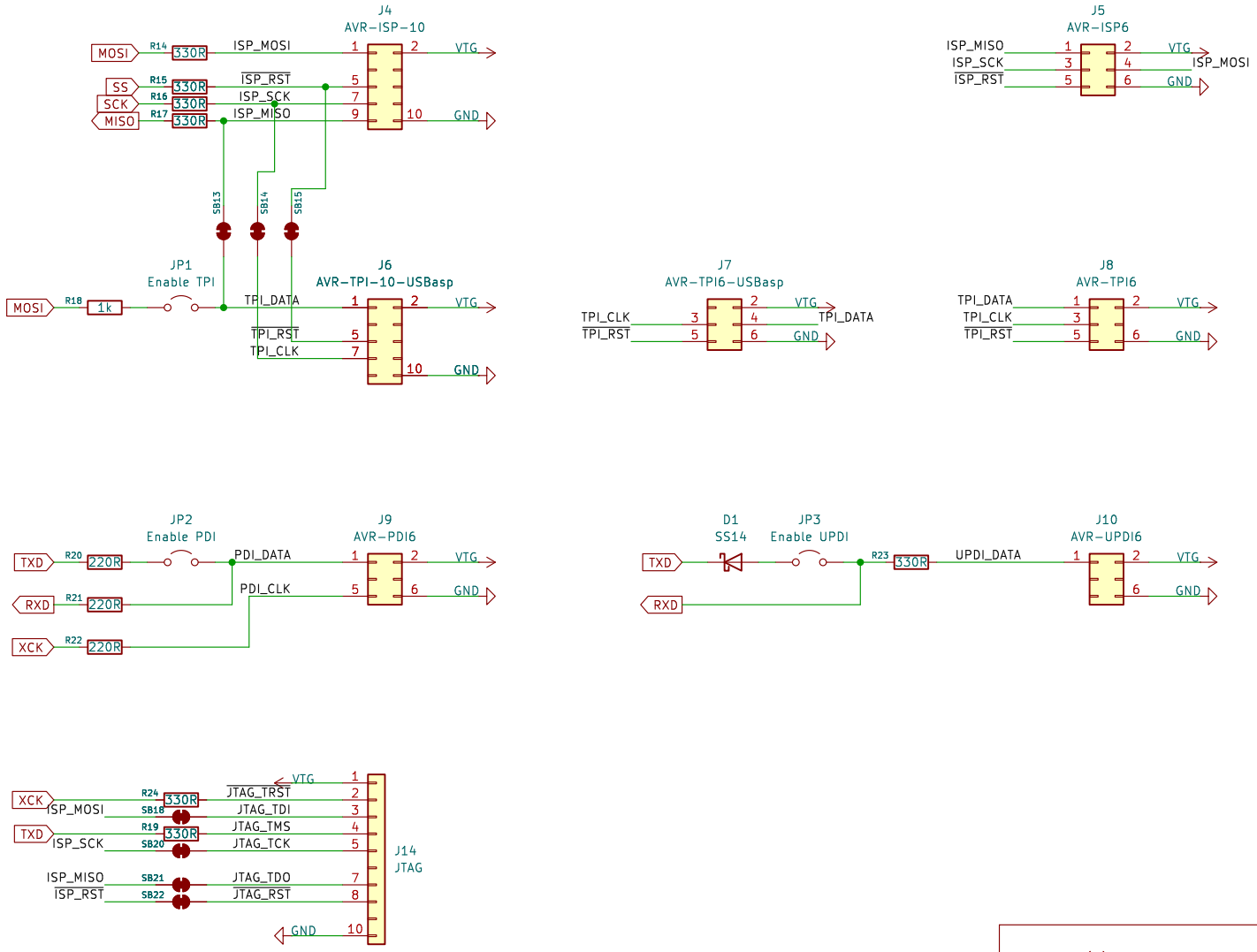

Copyright (C) Aloysius Indrayanto
This file is part of the JxMake program, see LICENSE file for the license details

Sheet: /AVR_Programmer/
File: AVR_Programmer.kicad_sch

Title: Versatile MCU Programmer

Size: A4	Date: 2025-04-30	**Rev: 1.2.0a**
KiCad E.D.A. 8.0.5		Id: 3/4

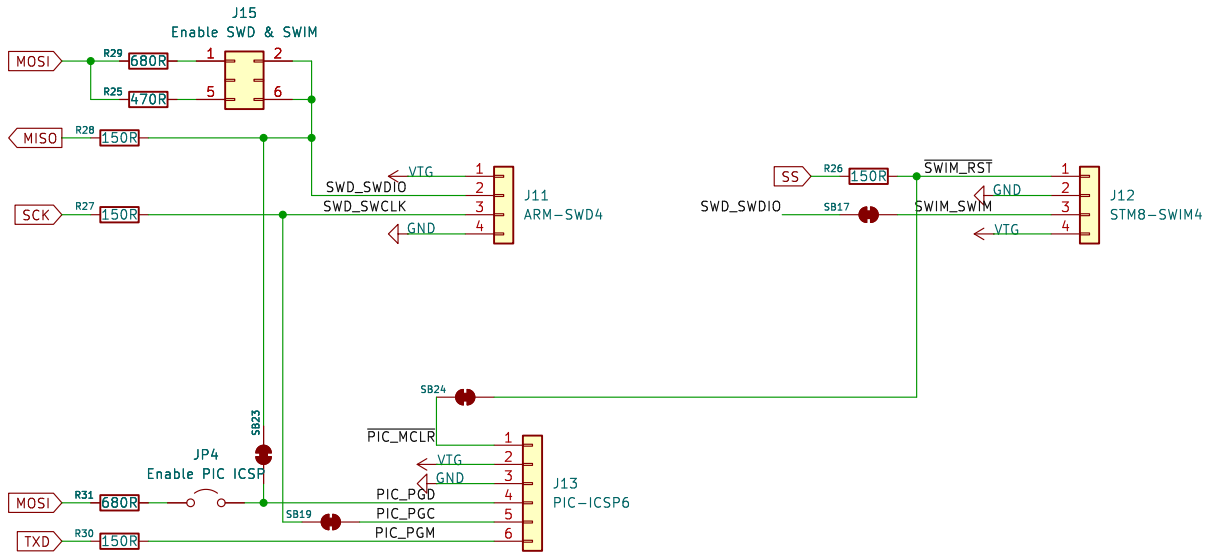

Copyright (C) Aloysius Indrayanto
This file is part of the JxMake program, see LICENSE file for the license details

Sheet: /SWD_SWIM_PIC_Programmer/
File: SS_PIC_Programmer.kicad_sch

Title: Versatile MCU Programmer

Size: A4	Date: 2025-04-30	**Rev: 1.2.0a**
KiCad E.D.A. 8.0.5		Id: 4/4