Main
File: Main.kicad_sch

AVR_Programmer
File: AVR_Programmer.kicad_sch

SWD_SWIM_PIC_Programmer
File: SS_PIC_Programmer.kicad_sch

Copyright (C) Aloysius Indrayanto
This file is part of the JxMake program, see LICENSE file for the license details

Sheet: /
File: VMP.kicad_sch

Title: Versatile MCU Programmer (Prototype PCB Matrix)

Size: A4	Date: 2025-01-26	**Rev: 1.0.7c**
KiCad E.D.A. 8.0.5		Id: 1/4

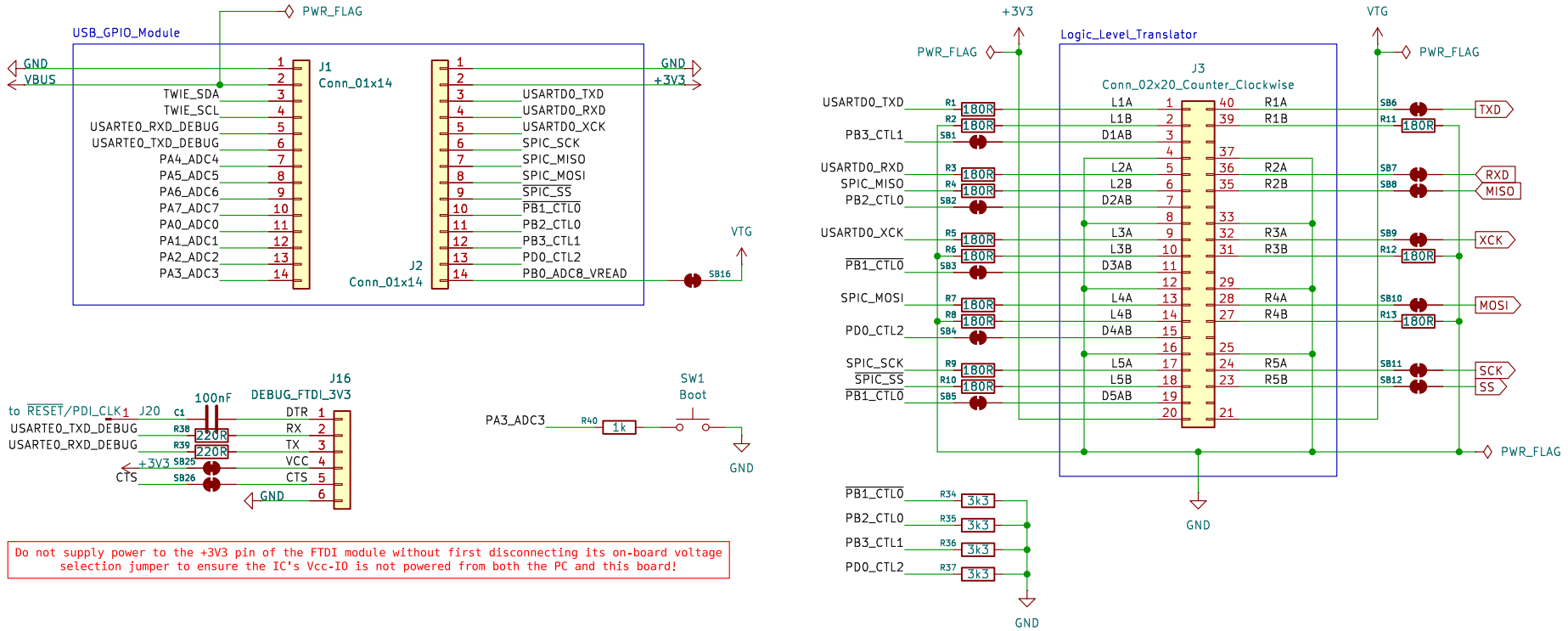

Copyright (C) Aloysius Indrayanto
This file is part of the JxMake program, see LICENSE file for the license details

Sheet: /Main/
File: Main.kicad_sch

Title: Versatile MCU Programmer (Prototype PCB Matrix)

Size: A4	Date: 2025-01-26	Rev: 1.0.7c
KiCad E.D.A. 8.0.5		Id: 2/4

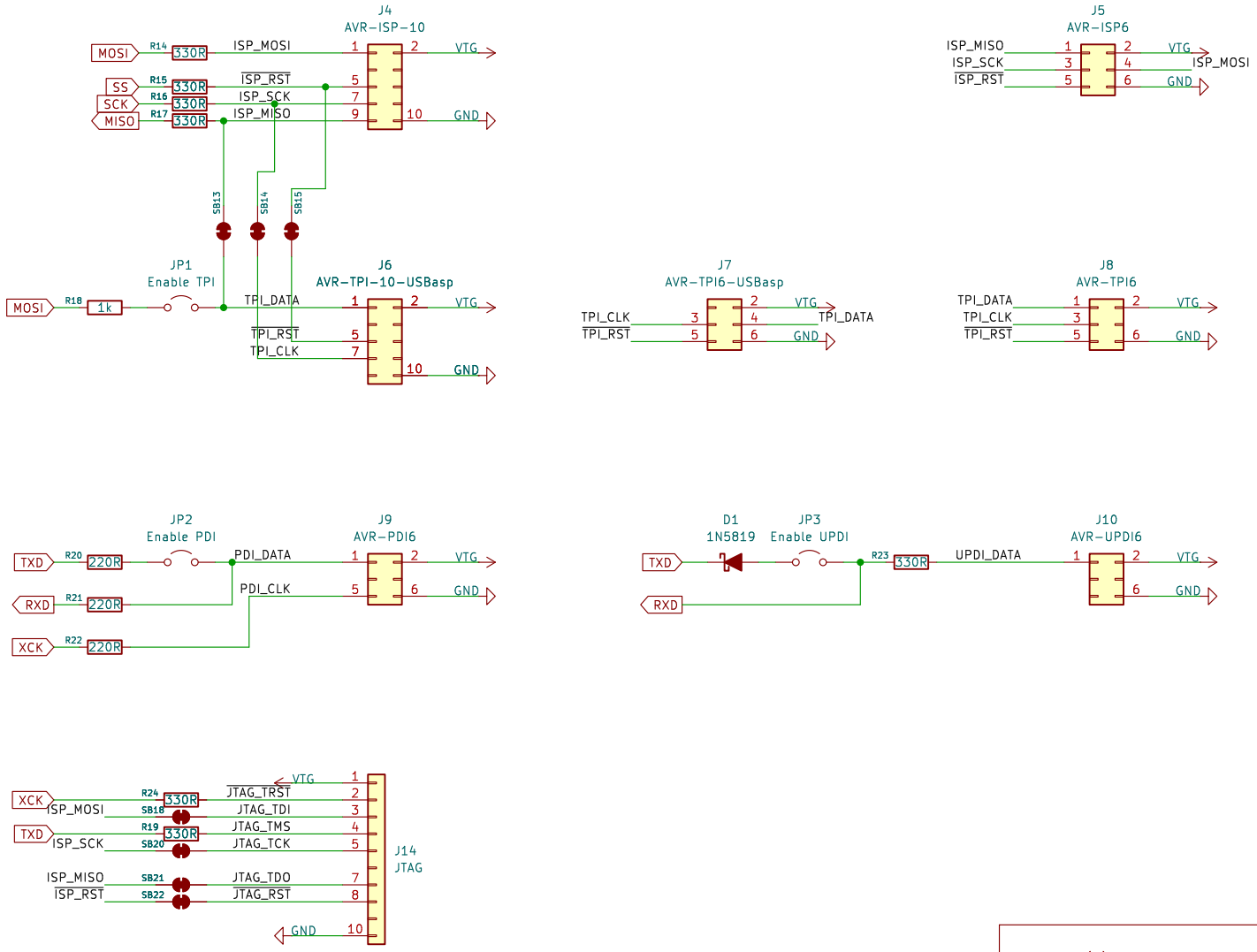

Copyright (C) Aloysius Indrayanto
This file is part of the JxMake program, see LICENSE file for the license details

Sheet: /AVR_Programmer/
File: AVR_Programmer.kicad_sch

Title: Versatile MCU Programmer (Prototype PCB Matrix)

Size: A4	Date: 2025-01-26	Rev: 1.0.7c
KiCad E.D.A. 8.0.5		Id: 3/4

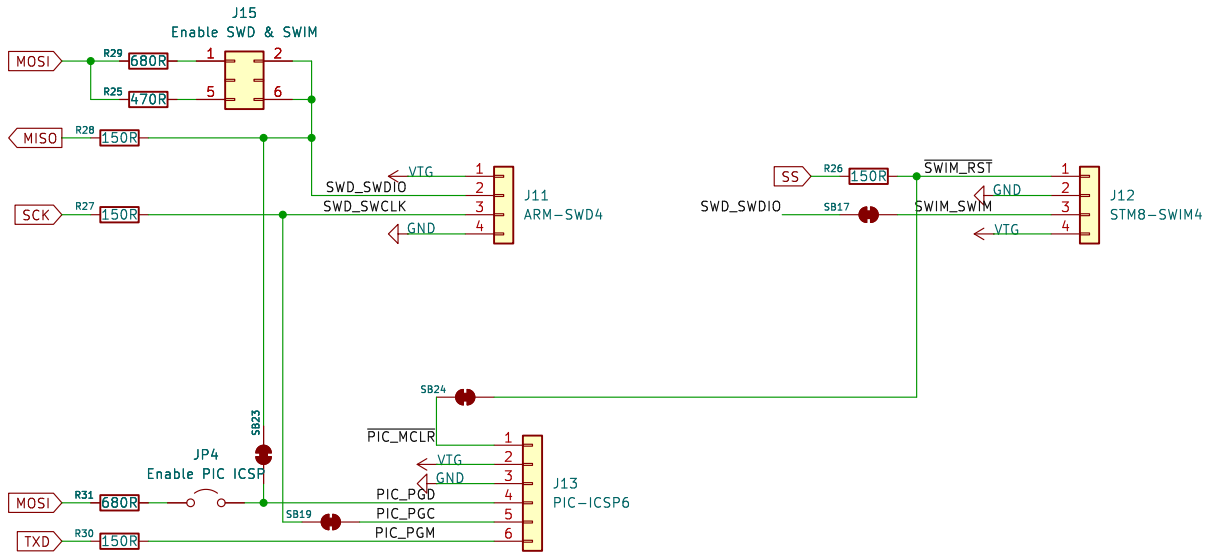

Copyright (C) Aloysius Indrayanto
This file is part of the JxMake program, see LICENSE file for the license details

Sheet: /SWD_SWIM_PIC_Programmer/
File: SS_PIC_Programmer.kicad_sch

Title: Versatile MCU Programmer (Prototype PCB Matrix)

Size: A4	Date: 2025-01-26	**Rev: 1.0.7c**
KiCad E.D.A. 8.0.5		Id: 4/4