Main
File: Main.kicad_sch

AVR_Programmer
File: AVR_Programmer.kicad_sch

RC_Oscillator
File: RC_Oscillator.kicad_sch

AnalogSwitch
File: AnalogSwitch.kicad_sch

SWD_SWIM_PIC_Programmer
File: SS_PIC_Programmer.kicad_sch

H1
MountingHole
H2
MountingHole
H3
MountingHole
H4
MountingHole
H5
MountingHole
H6
MountingHole
H7
MountingHole
H8
MountingHole
H9
MountingHole
H10
MountingHole
H11
MountingHole
H12
MountingHole

Copyright (C) Aloysius Indrayanto
This file is part of the JxMake program, see LICENSE file for the license details

Sheet: /
File: VMP.kicad_sch

Title: Versatile MCU Programmer II

Size: A4	Date: 2025-08-20	**Rev: 1.0.9c**
KiCad E.D.A. 8.0.5		Id: 1/6

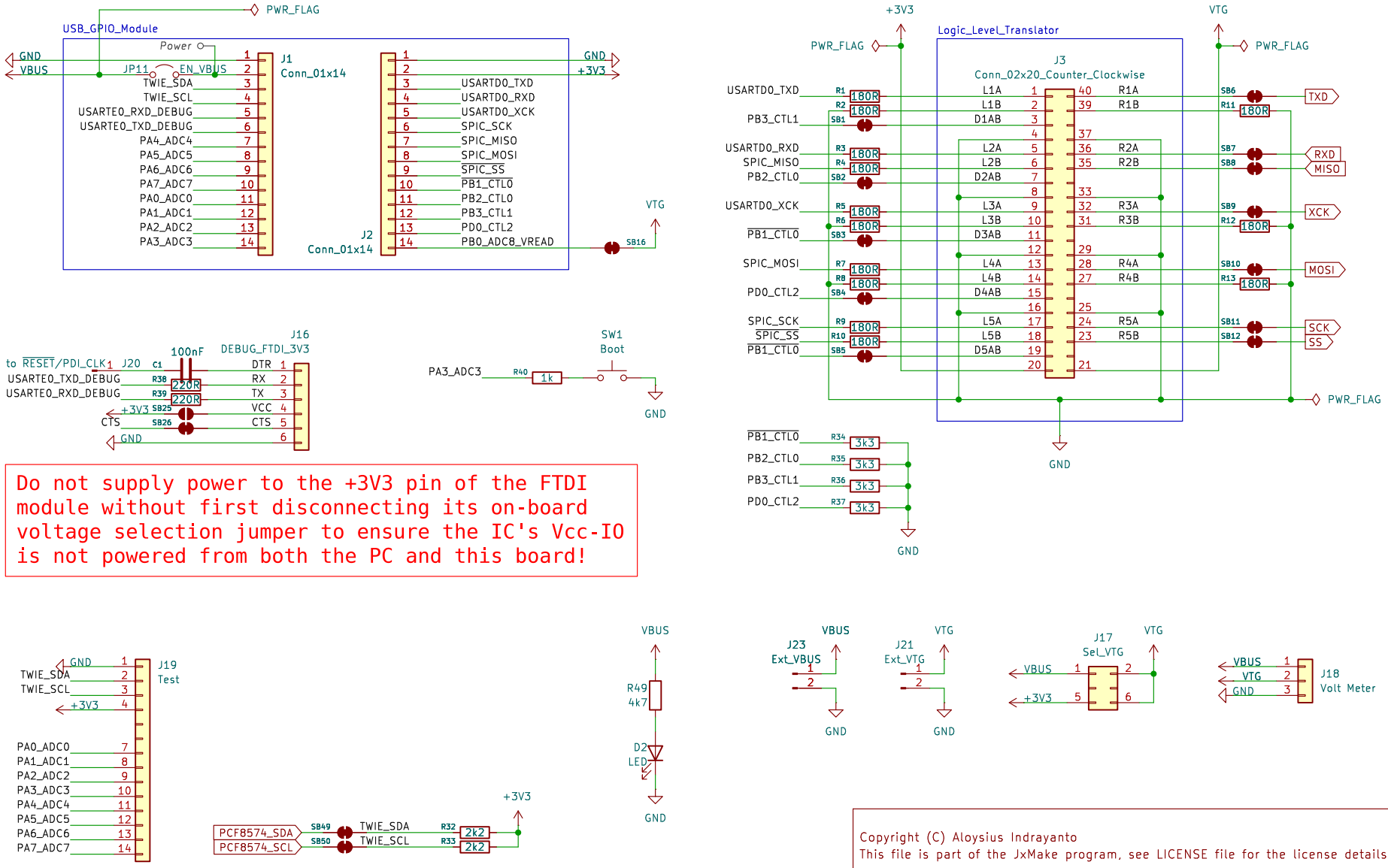

Copyright (C) Aloysius Indrayanto
This file is part of the JxMake program, see LICENSE file for the license details

Sheet: /Main/
File: Main.kicad_sch

Title: Versatile MCU Programmer II

Size: A4	Date: 2025-08-20	Rev: 1.0.9c
KiCad E.D.A. 8.0.5		Id: 2/6

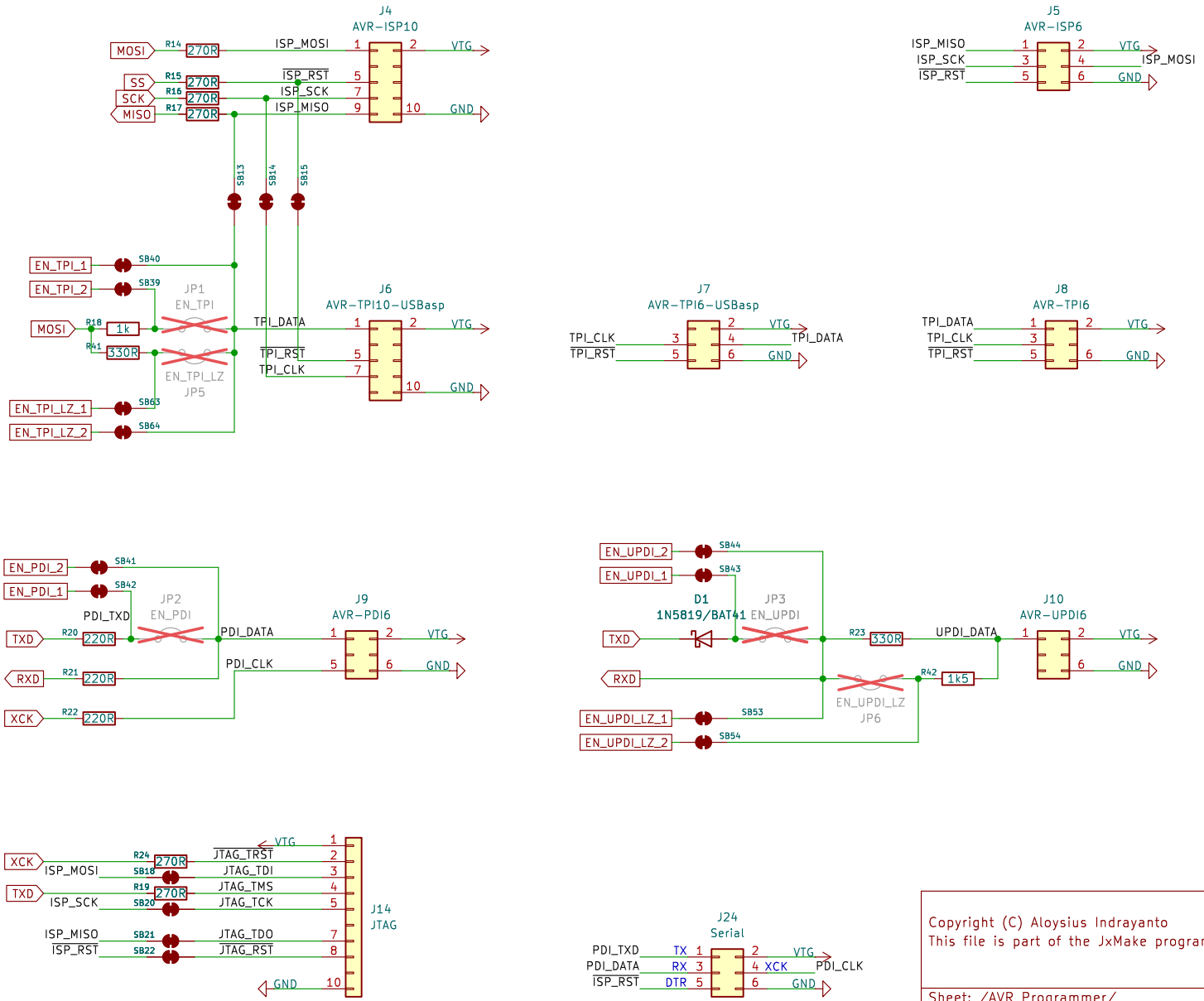

Copyright (C) Aloysius Indrayanto
This file is part of the JxMake program, see LICENSE file for the license details

Sheet: /AVR_Programmer/
File: AVR_Programmer.kicad_sch

Title: Versatile MCU Programmer II

Size: A4	Date: 2025-08-20	Rev: 1.0.9c
KiCad E.D.A. 8.0.5		Id: 3/6

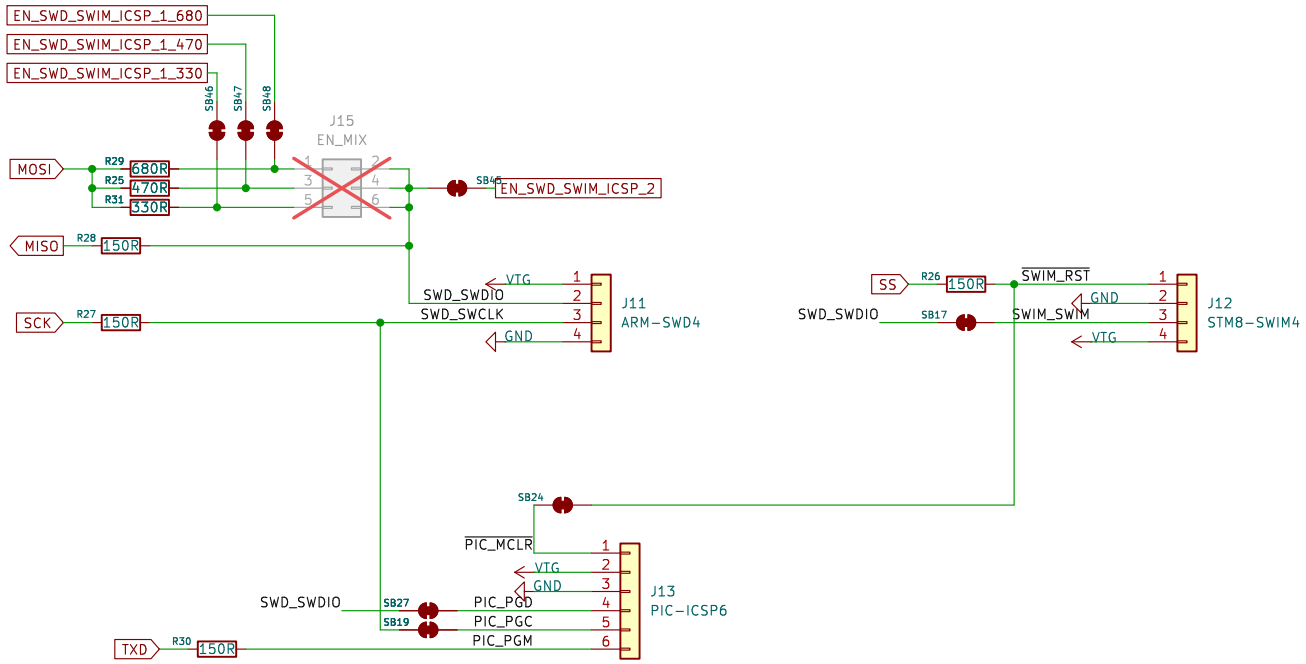

Copyright (C) Aloysius Indrayanto
This file is part of the JxMake program, see LICENSE file for the license details

Sheet: /SWD_SWIM_PIC_Programmer/
File: SS_PIC_Programmer.kicad_sch

Title: Versatile MCU Programmer II

Size: A4	Date: 2025-08-20	**Rev: 1.0.9c**
KiCad E.D.A. 8.0.5		Id: 4/6

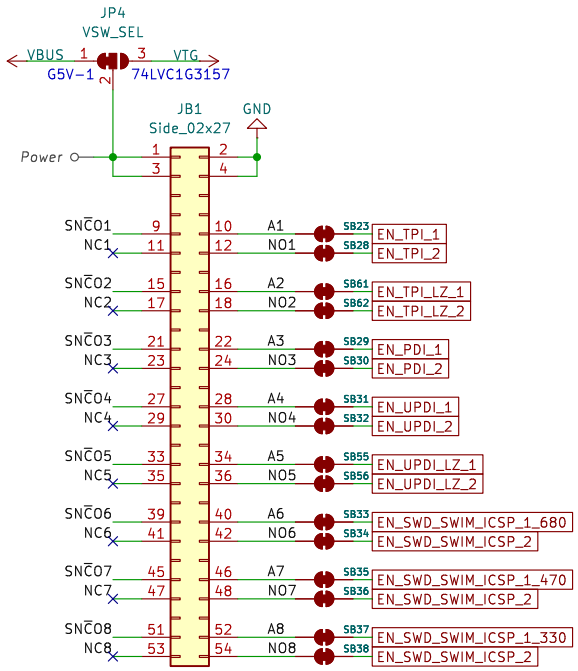

The 'G5V-1' module requires a 4.5V to 5.5V supply and can switch a wide range of positive and negative voltages.

The '74LVC1G3157' module requires a 2.5 V to 5.5 V supply and can switch voltages from 0 V to +Vsupply.

VBUS (+5V) is selected by default, as this programmer should work better with the 'G5V-1' module. If you prefer to use the '74LVC1G3157' module and VBUS never drops below VTG, then the default setting can remain unchanged. Otherwise, please reposition the jumper to select VTG.

Refer to 'hardware/Tools/KiCad8/Analog_Switch_Variant' for the schematic and PCB layout of the analog switch modules.

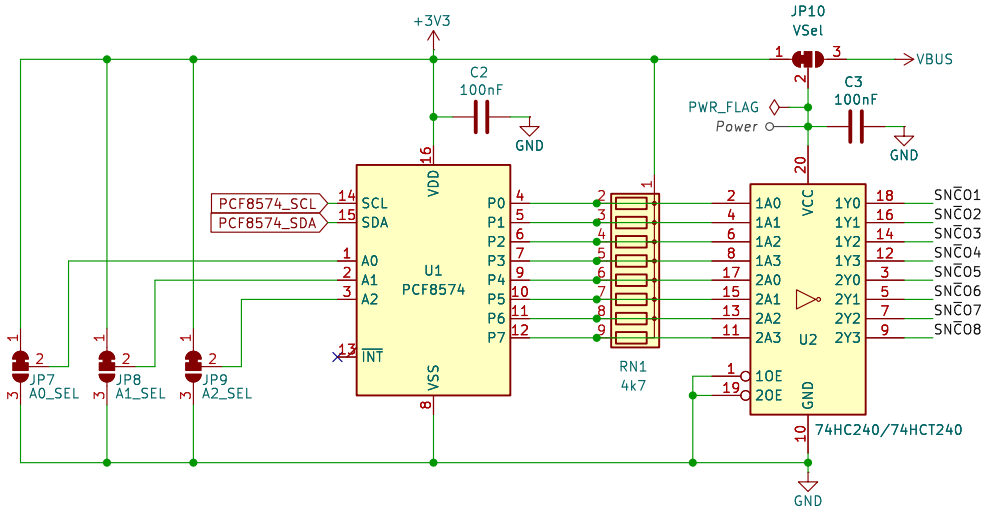

Copyright (C) Aloysius Indrayanto
This file is part of the JxMake program, see LICENSE file for the license details

Sheet: /AnalogSwitch/
File: AnalogSwitch.kicad_sch

Title: Versatile MCU Programmer II

Size: A4	Date: 2025-08-20	Rev: 1.0.9c
KiCad E.D.A. 8.0.5		Id: 5/6

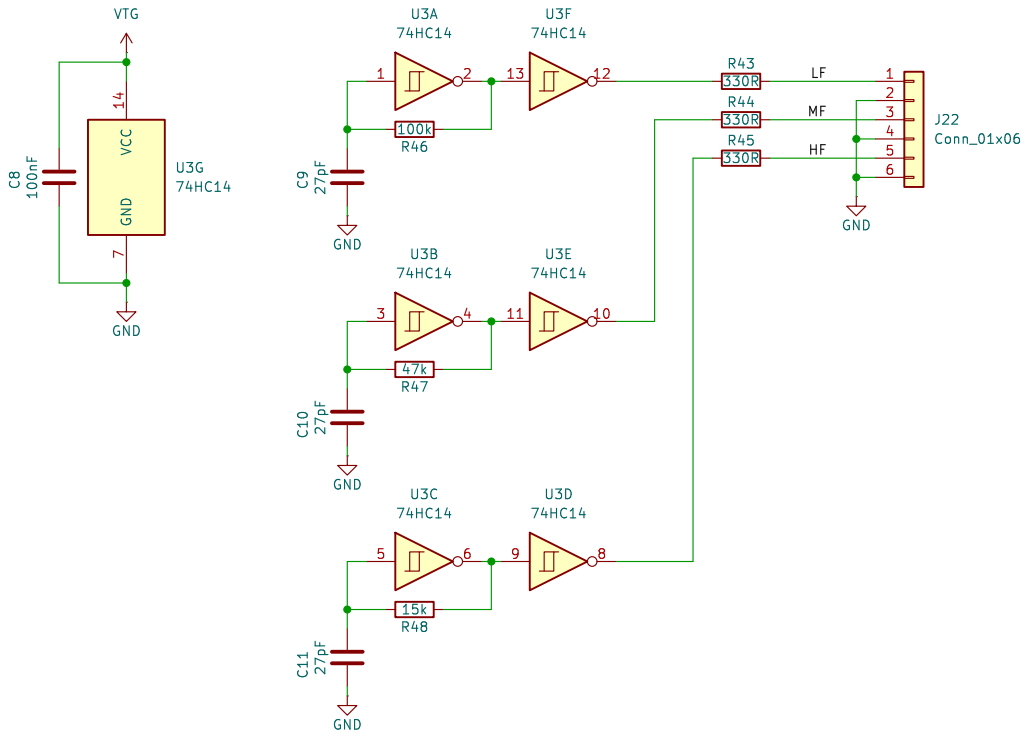

Copyright (C) Aloysius Indrayanto
This file is part of the JxMake program, see LICENSE file for the license details

Sheet: /RC_Oscillator/
File: RC_Oscillator.kicad_sch

Title: Versatile MCU Programmer II

Size: A4	Date: 2025-08-20	**Rev: 1.0.9c**
KiCad E.D.A. 8.0.5		Id: 6/6