DG41xDY_with_Converter
File: DG41xDY.kicad_sch

74LVC1G3157
File: 74LVC1G3157.kicad_sch

G5V-1
File: G5V-1.kicad_sch

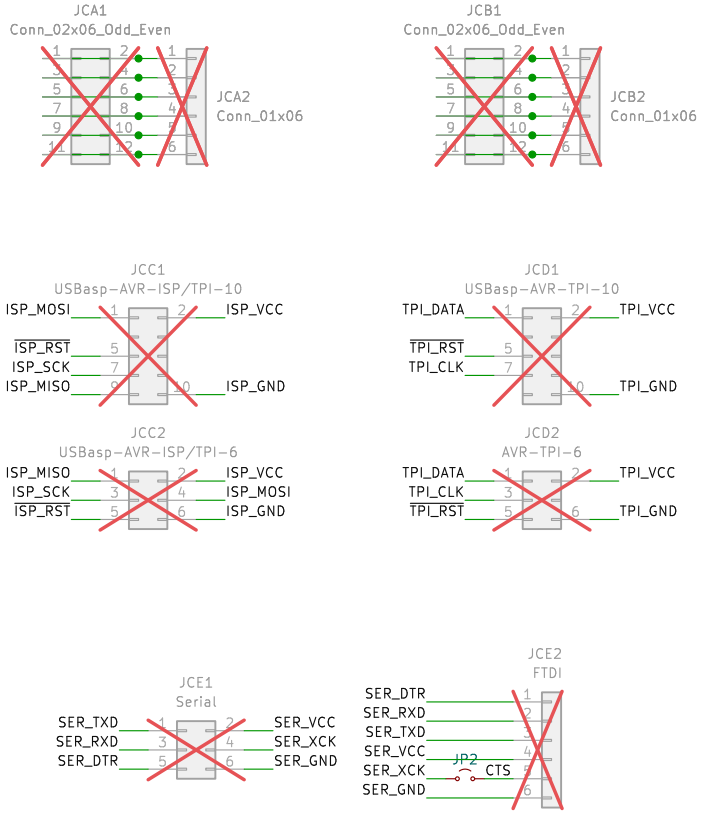

Copyright (C) Aloysius Indrayanto
This file is part of the JxMake program, see LICENSE file for the license details

Sheet: /
File: ASV.kicad_sch

Title: Analog Switch Variant

Size: A4	Date: 2025-08-25	**Rev: 1.0.6**
KiCad E.D.A. 8.0.5		Id: 1/4

!!! CAUTION !!!

VDD2 must remain between 3.3V and 5.5V.
VDD2_47 must remain between 4.0V and 7.0V.
V+_In must remain between 4.5V and 20.0V.

The switchable analog voltage range is from -(VDD2_47 - 1.5V) to {max(V+_In, VDD2) - 0.5V}. The maximum switchable current is 30mA, and the on-resistance (Ron) varies between 65Ω at lower supply voltages and 25Ω at higher supply voltages.

The DG411DY has active-low control pins (IN1, IN2, IN3, IN4).

The DG412DY has active-high control pins (IN1, IN2, IN3, IN4).

This module uses the DG412DY by default. You can replace it with the DG411DY and modify JP1 accordingly. The firmware will automatically detect the selected configuration.

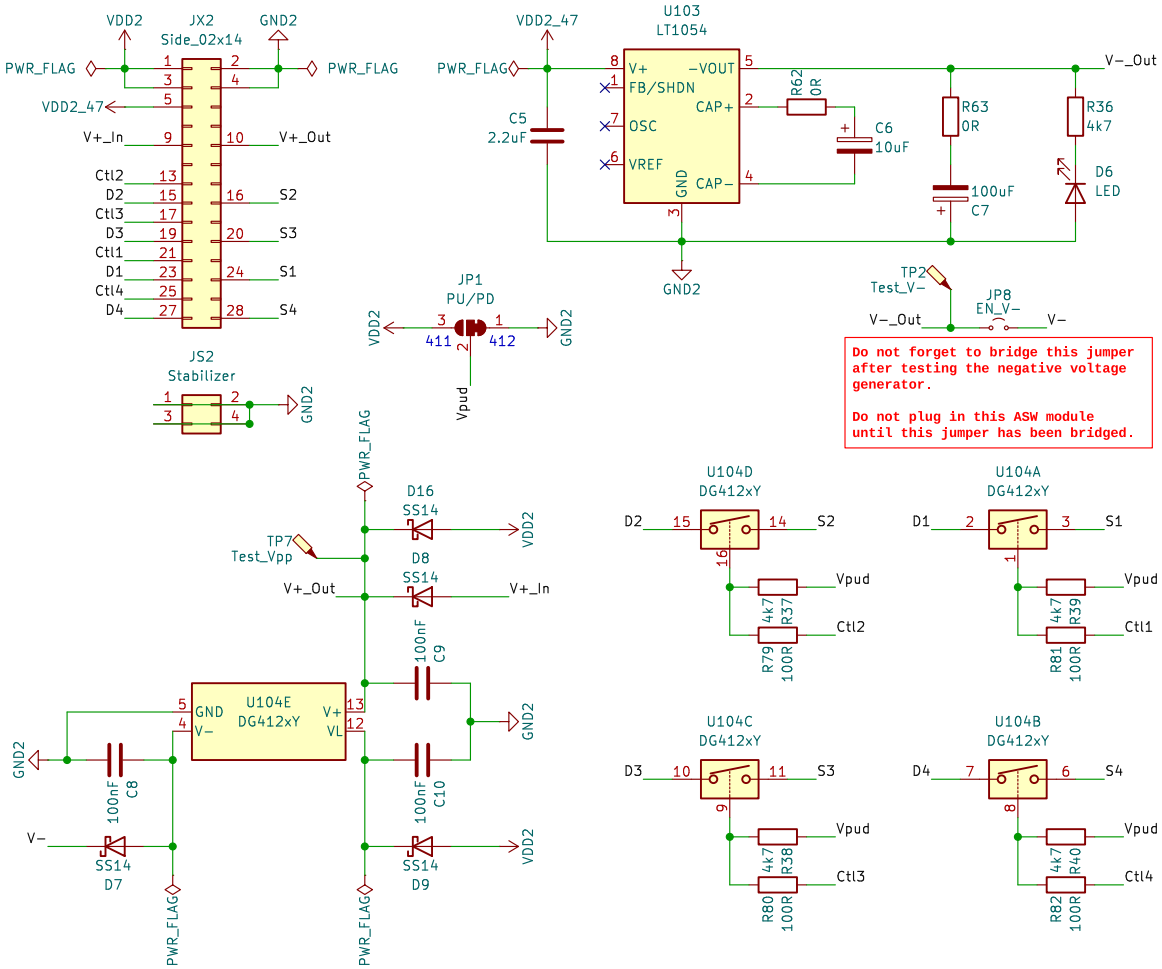

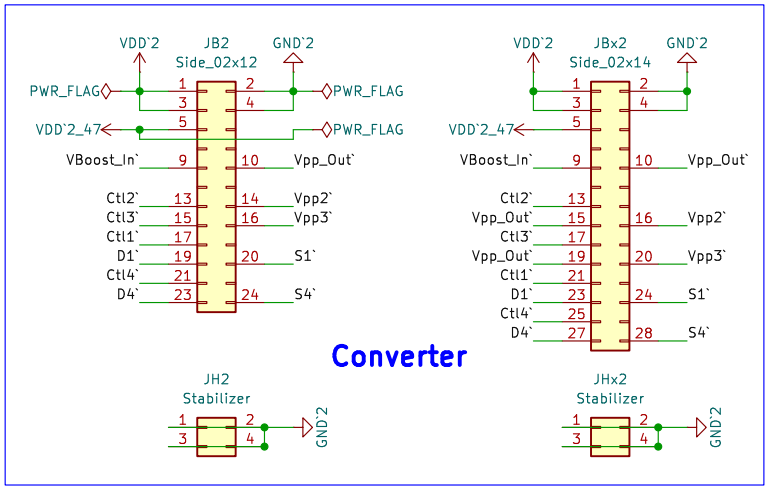

Copyright (C) Aloysius Indrayanto
This file is part of the JxMake program, see LICENSE file for the license details

Sheet: /DG41xDY_with_Converter/
File: DG41xDY.kicad_sch

Title: Analog Switch Variant

Size: A4	Date: 2025-08-25	Rev: 1.0.6
KiCad E.D.A. 8.0.5		Id: 2/4

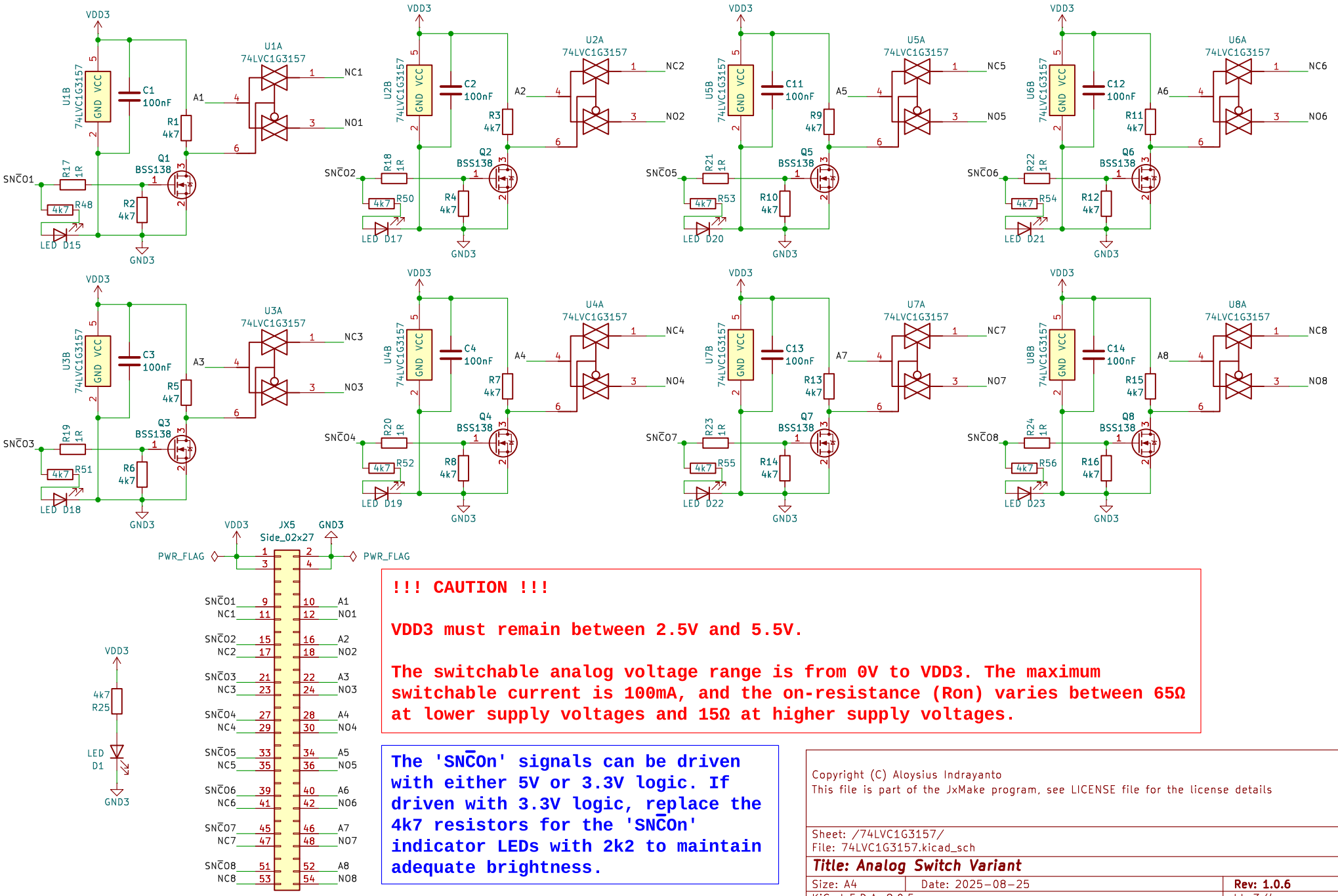

!!! CAUTION !!!

VDD3 must remain between 2.5V and 5.5V.

The switchable analog voltage range is from 0V to VDD3. The maximum switchable current is 100mA, and the on-resistance (Ron) varies between 65Ω at lower supply voltages and 15Ω at higher supply voltages.

The 'SNC̄On' signals can be driven with either 5V or 3.3V logic. If driven with 3.3V logic, replace the 4k7 resistors for the 'SNC̄On' indicator LEDs with 2k2 to maintain adequate brightness.

Copyright (C) Aloysius Indrayanto
This file is part of the JxMake program, see LICENSE file for the license details

Sheet: /74LVC1G3157/
File: 74LVC1G3157.kicad_sch

Title: Analog Switch Variant

Size: A4	Date: 2025-08-25	Rev: 1.0.6
KiCad E.D.A. 8.0.5		Id: 3/4

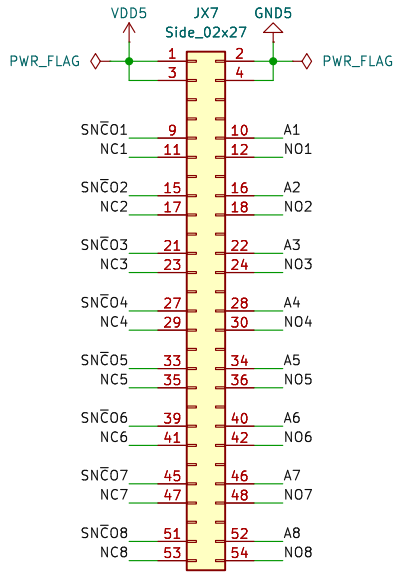

!!! CAUTION !!!

VDD5 must remain between 4.5V and 5.5V.

The switchable analog voltage range is from -20V to +20V. To achieve the maximum number of switching operations, the maximum switchable current is 200mA, at which point the on-resistance (Ron) may rise to as much as 100mΩ over time

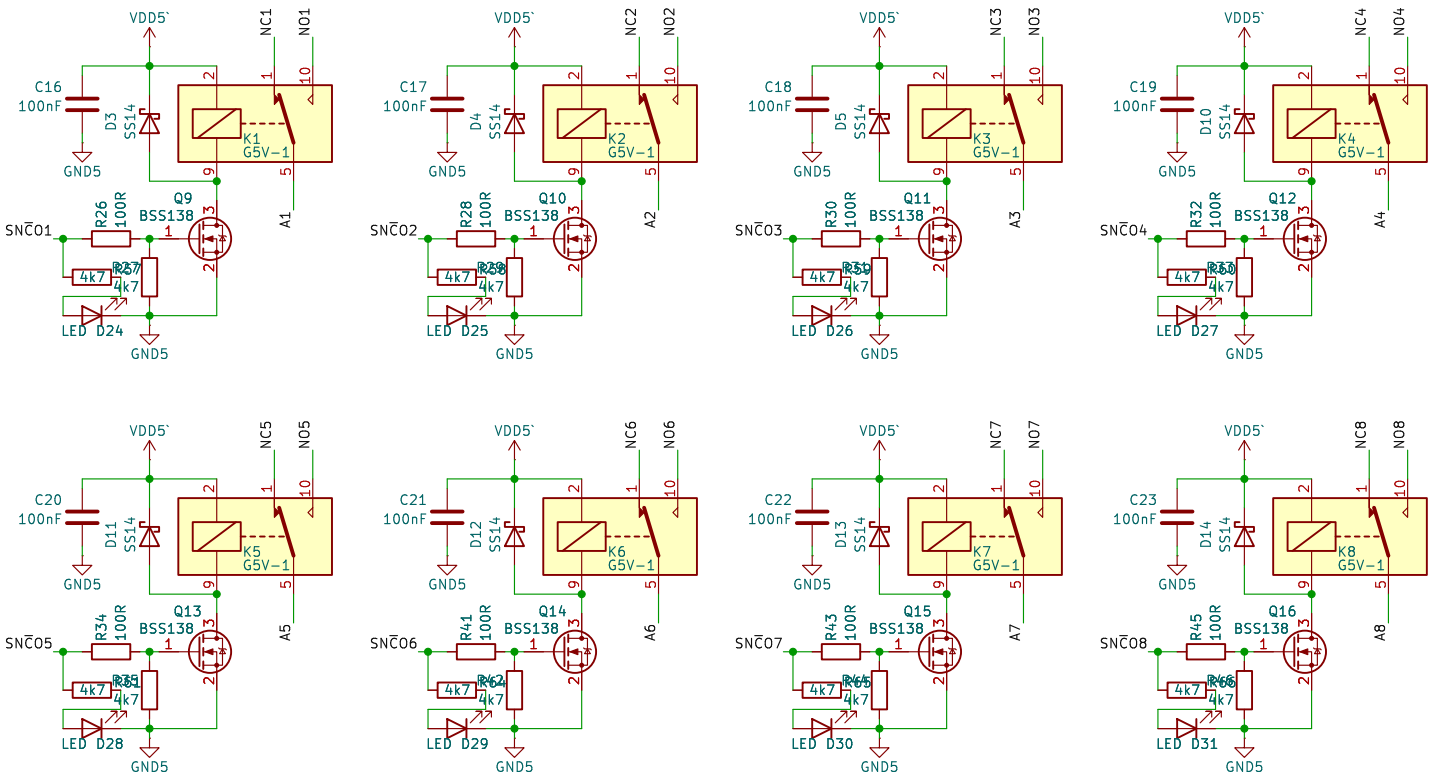

The 'SNC̄On' signals can be driven with either 5V or 3.3V logic. If driven with 3.3V logic, replace the 4k7 resistors for the 'SNC̄On' indicator LEDs with 2k2 to maintain adequate brightness.

Copyright (C) Aloysius Indrayanto
This file is part of the JxMake program, see LICENSE file for the license details

Sheet: /G5V-1/
File: G5V-1.kicad_sch

Title: Analog Switch Variant

Size: A4	Date: 2025-08-25	Rev: 1.0.6
KiCad E.D.A. 8.0.5		Id: 4/4