Selector
File: Selector.kicad_sch

Sequencer
File: Sequencer.kicad_sch

IRLML6401, AO3401(A), and other similar P-MOSFETs with the same footprint can also be used as substitutes for the IRLML6402.

Copyright (C) Aloysius Indrayanto
This file is part of the JxMake program, see LICENSE file for the license details

Sheet: /
File: PSC.kicad_sch

Title: Power Sopply Control

Size: A4	Date: 2025-10-15	**Rev: 1.0.5**
KiCad E.D.A. 8.0.5		Id: 1/3

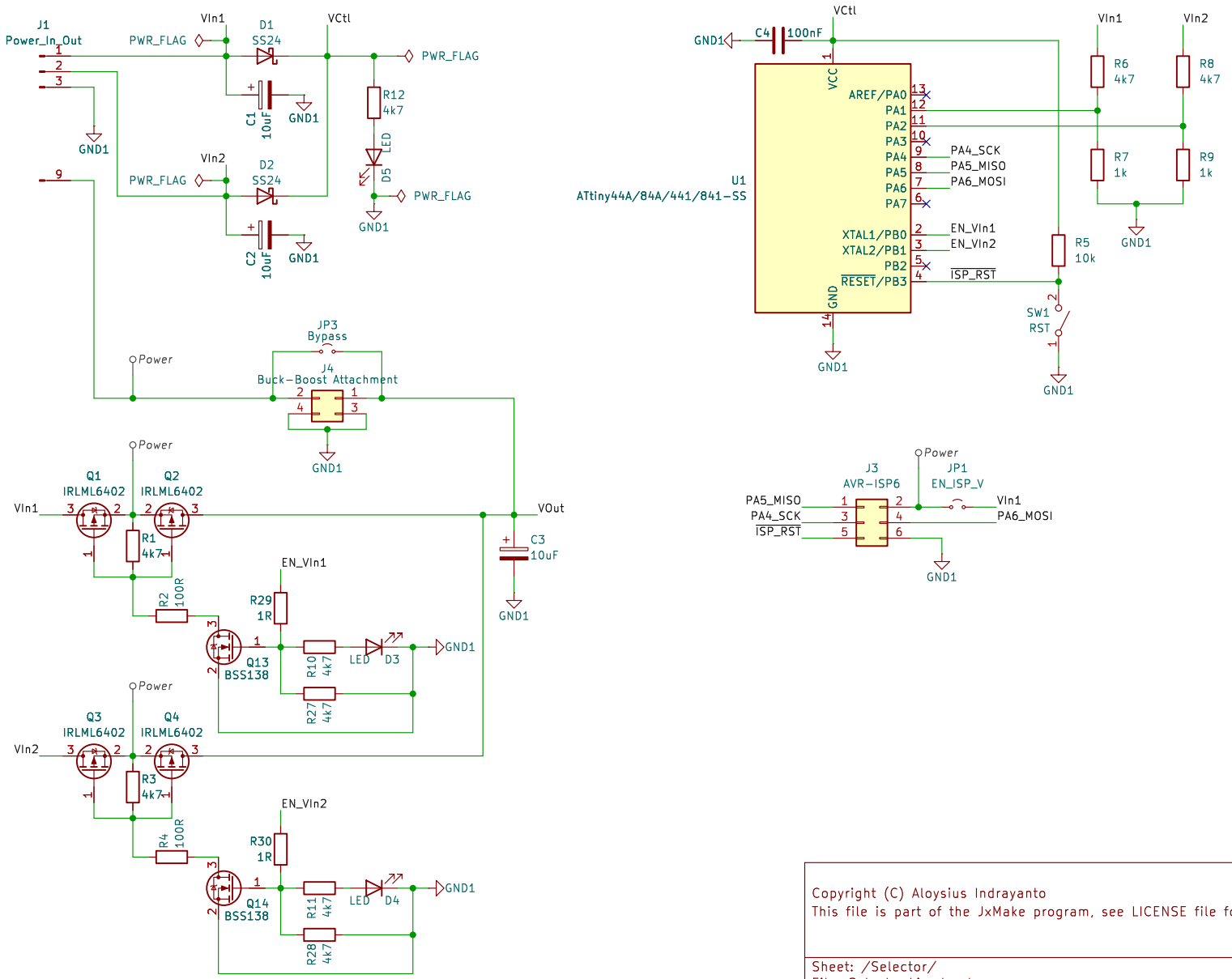

Copyright (C) Aloysius Indrayanto
This file is part of the JxMake program, see LICENSE file for the license details

Sheet: /Selector/
File: Selector.kicad_sch

Title: Power Sopply Control

Size: A4	Date: 2025-10-15	**Rev: 1.0.5**
KiCad E.D.A. 8.0.5		Id: 2/3

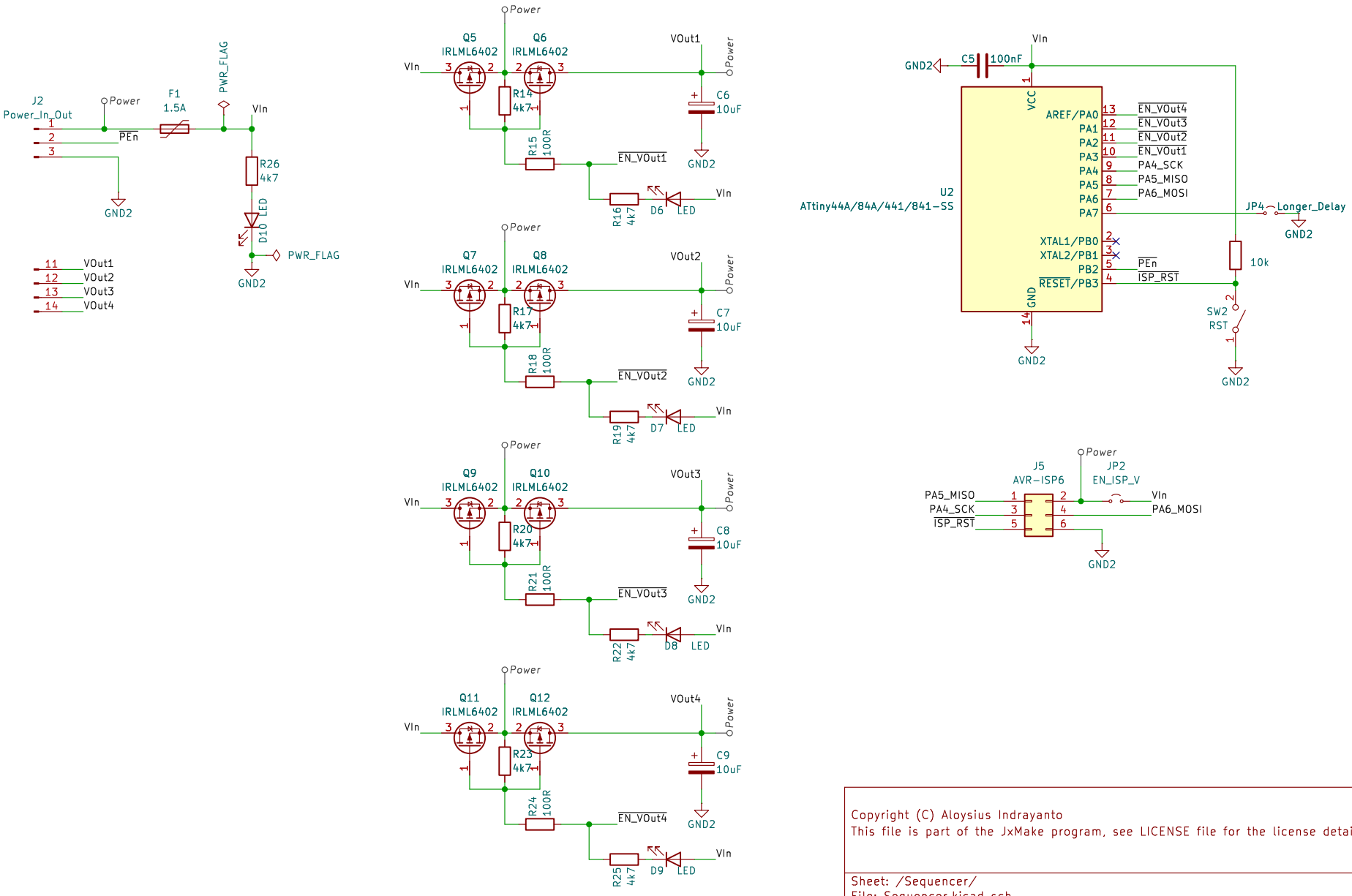

Copyright (C) Aloysius Indrayanto
This file is part of the JxMake program, see LICENSE file for the license details

Sheet: /Sequencer/
File: Sequencer.kicad_sch

Title: Power Sopply Control

Size: A4	Date: 2025-10-15	**Rev: 1.0.5**
KiCad E.D.A. 8.0.5		Id: 3/3