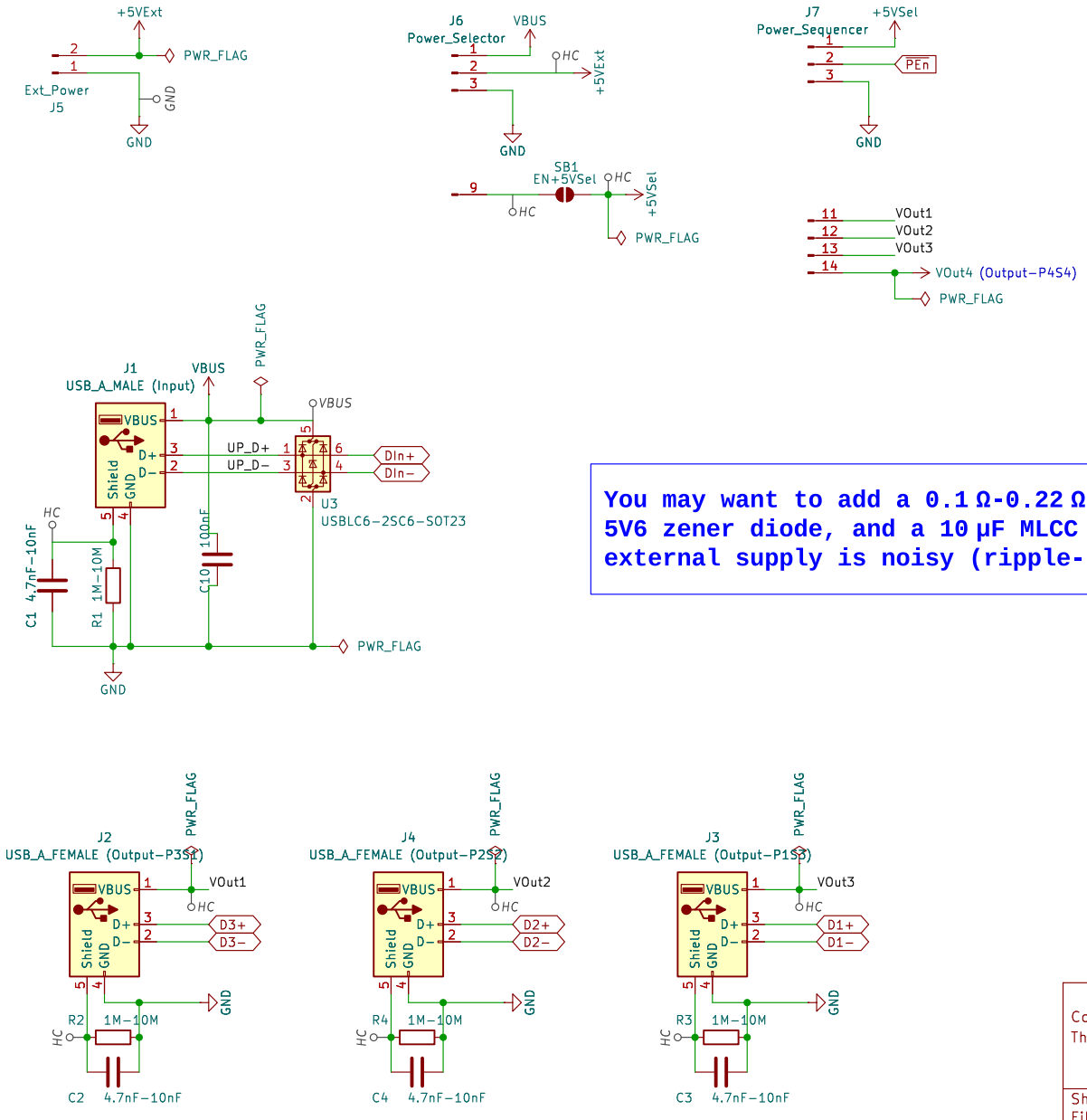

Hub
File: Hub.kicad_sch

Serial
File: Serial.kicad_sch

You may want to add a 0.1 Ω-0.22 Ω series resistor, a high-wattage (≥ 5 W) 5V6 zener diode, and a 10 µF MLCC to the external power connector if your external supply is noisy (ripple-prone or transient-rich).

H1 MountingHole
H2 MountingHole
H3 MountingHole
H4 MountingHole
H5 MountingHole

Copyright (C) Aloysius Indrayanto
This file is part of the JxMake program, see LICENSE file for the license details

Sheet: /
File: USH.kicad_sch

Title: USB to Serial Converter with Hub – GLST

Size: A4	Date: 2026-02-22	Rev: 1.0.8
KiCad E.D.A. 8.0.5		Id: 1/3

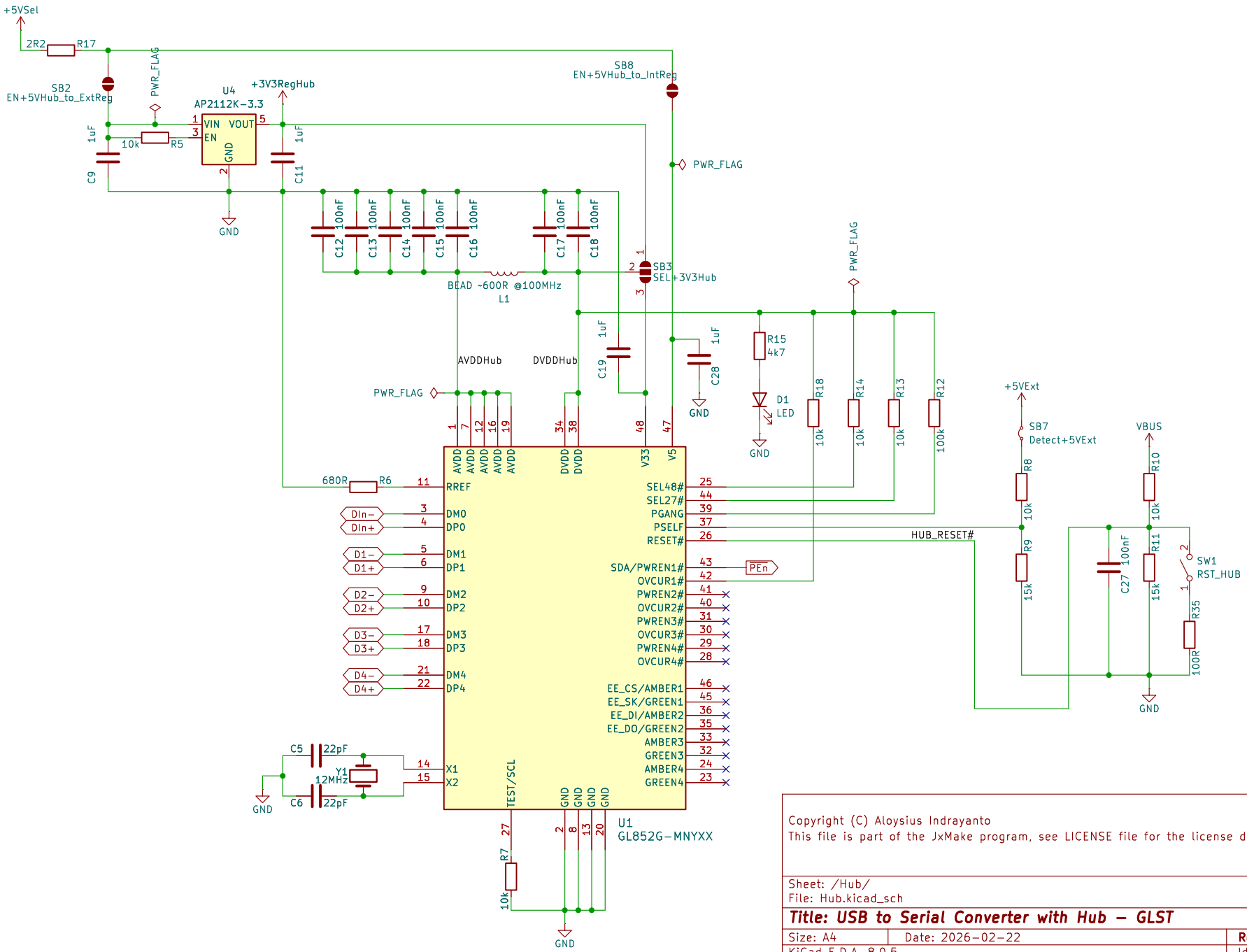

Copyright (C) Aloysius Indrayanto
This file is part of the JxMake program, see LICENSE file for the license details

Sheet: /Hub/
File: Hub.kicad_sch

Title: USB to Serial Converter with Hub – GLST

Size: A4	Date: 2026-02-22	Rev: 1.0.8
KiCad E.D.A. 8.0.5		Id: 2/3

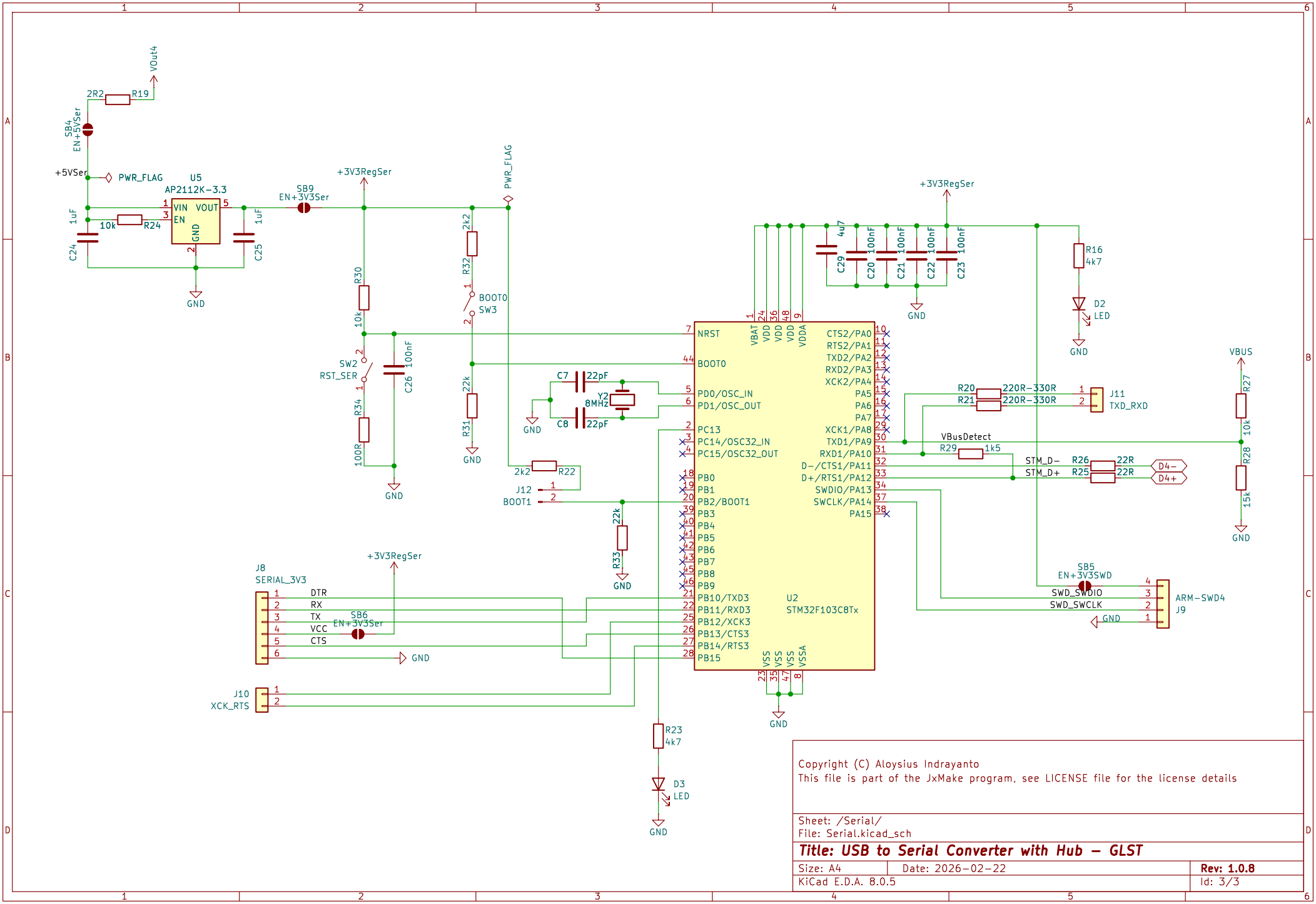

Copyright (C) Aloysius Indrayanto
This file is part of the JxMake program, see LICENSE file for the license details

Sheet: /Serial/
File: Serial.kicad_sch

Title: USB to Serial Converter with Hub – GLST

Size: A4	Date: 2026-02-22	Rev: 1.0.8
KiCad E.D.A. 8.0.5		Id: 3/3