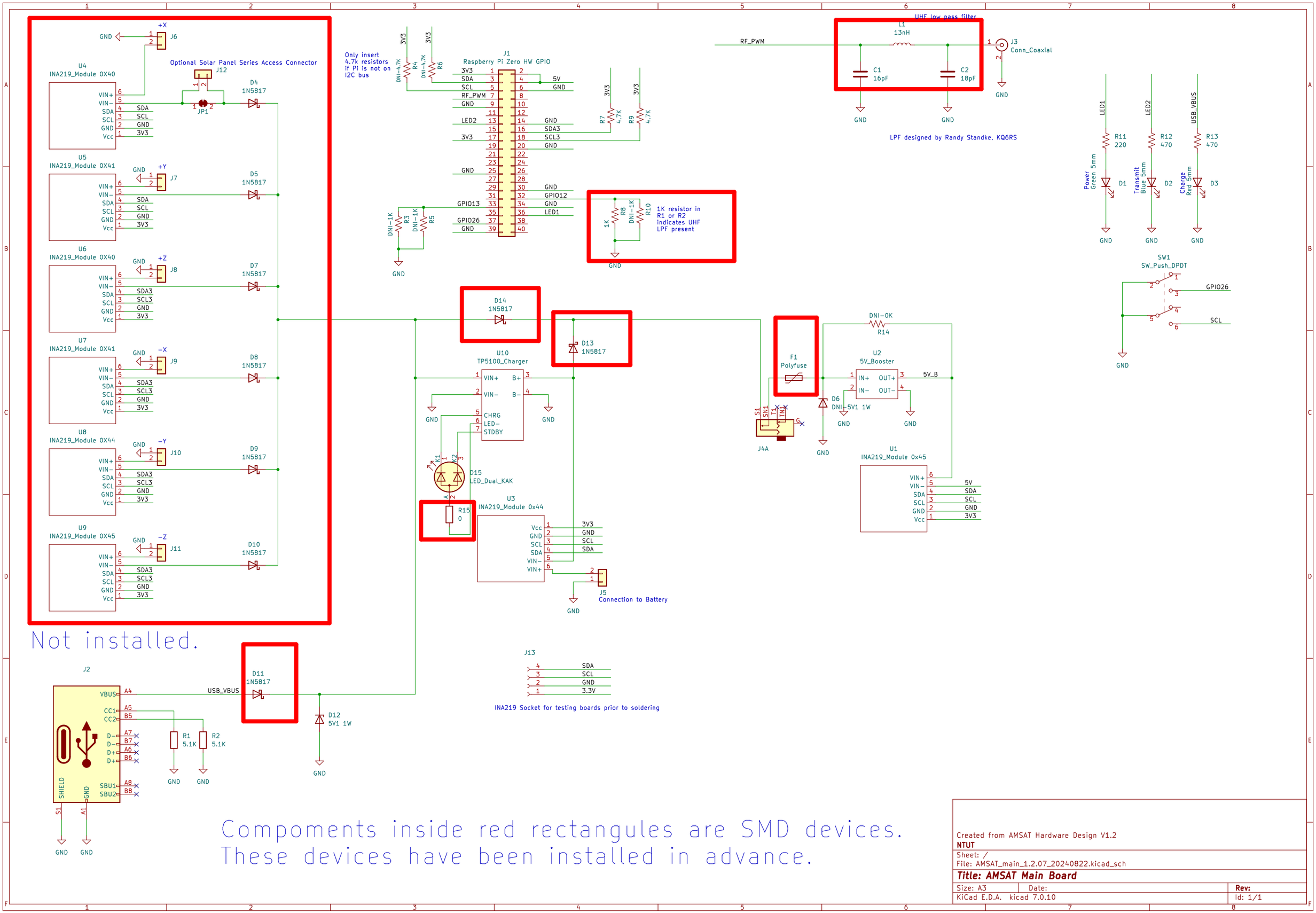
Optional Solar Panel Series Access Connector
Only insert 4.7k resistors if Pi is not on I2C bus
Raspberry Pi Zero HW GPIO
UHF low pass filter
LPF designed by Randy Standke, KQ6RS
1K resistor in R1 or R2 indicates UHF LPF present
TP5100_Charger
5V_Booster
INA219_Module 0x44
INA219_Module 0x45
Connection to Battery
INA219 Socket for testing boards prior to soldering
Not installed.
Compoments inside red rectangules are SMD devices.
These devices have been installed in advance.
Created from AMSAT Hardware Design V1.2
NTUT
Sheet: /
File: AMSAT_main_1.2.07_20240822.kicad_sch
Title: AMSAT Main Board
Size: A3
Date:
Rev:
KiCad E.D.A. kicad 7.0.10
Id: 1/1