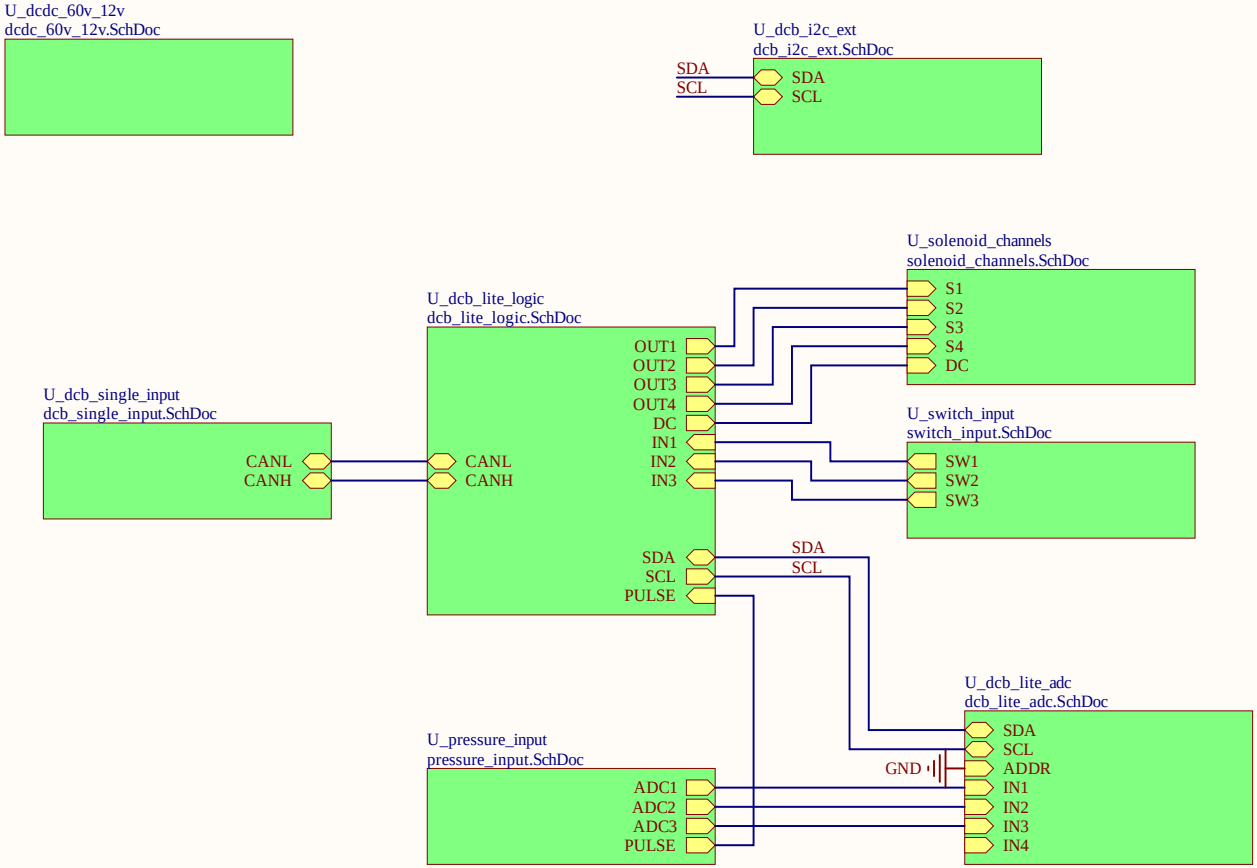

Title		
Size A	Number	Revision
Date: 4/17/2026		Sheet of
File: C:\Users\..\osmobuddy_top.SchDoc		Drawn By:

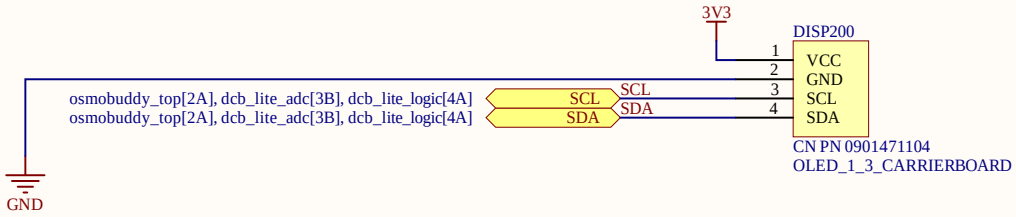

Title		
Size A	Number	Revision
Date: 4/17/2026		Sheet of
File: C:\Users\..\dcb_i2c_ext.SchDoc		Drawn By:

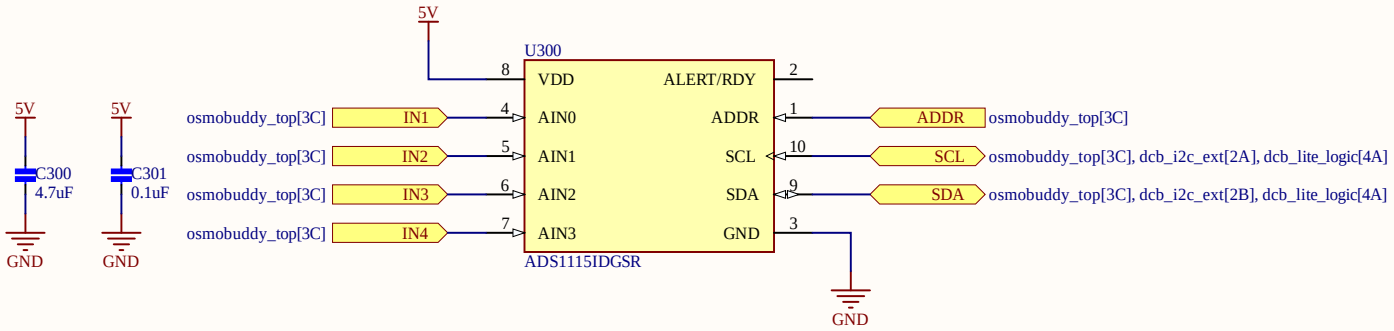

Title *			Made available under the CERN OHL v2.0
Size: A4	Number: *	Revision: *	blueacro.com
Date: 4/17/2026	Time: 5:12:03 PM	Sheet 3 of 10	github.com/blueacro
File: dcb_lite_adc.SchDoc			

© 2024 StackFoundry LLC. All Rights Reserved.

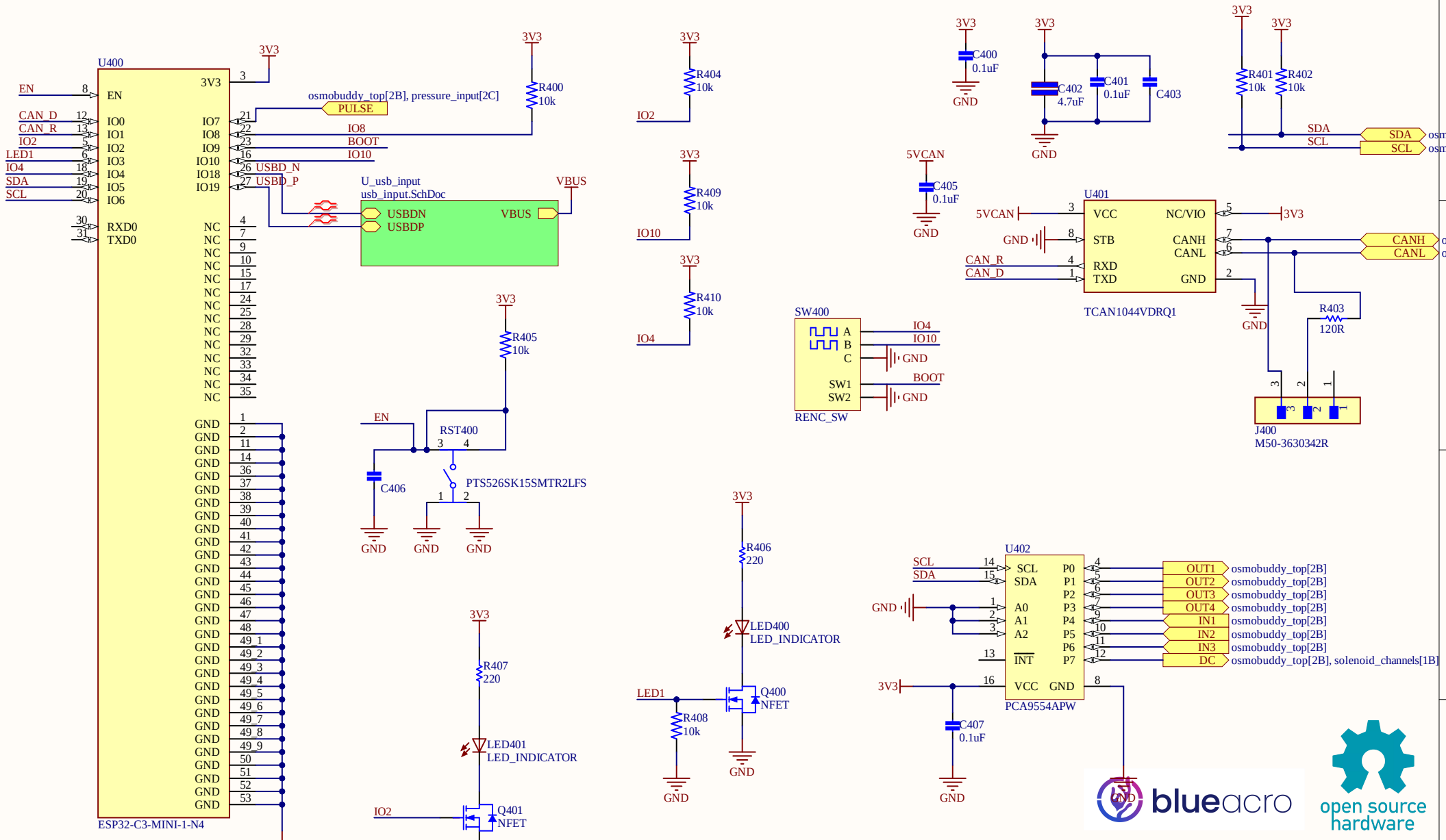

Title *			Made available under the CERN OHL v2.0
Size: A4	Number: *	Revision: *	blueacro.com
Date: 4/17/2026	Time: 5:12:03 PM	Sheet 4 of 10	github.com/blueacro
File: dcb_lite_logic.SchDoc			

© 2024 StackFoundry LLC. All Rights Reserved.

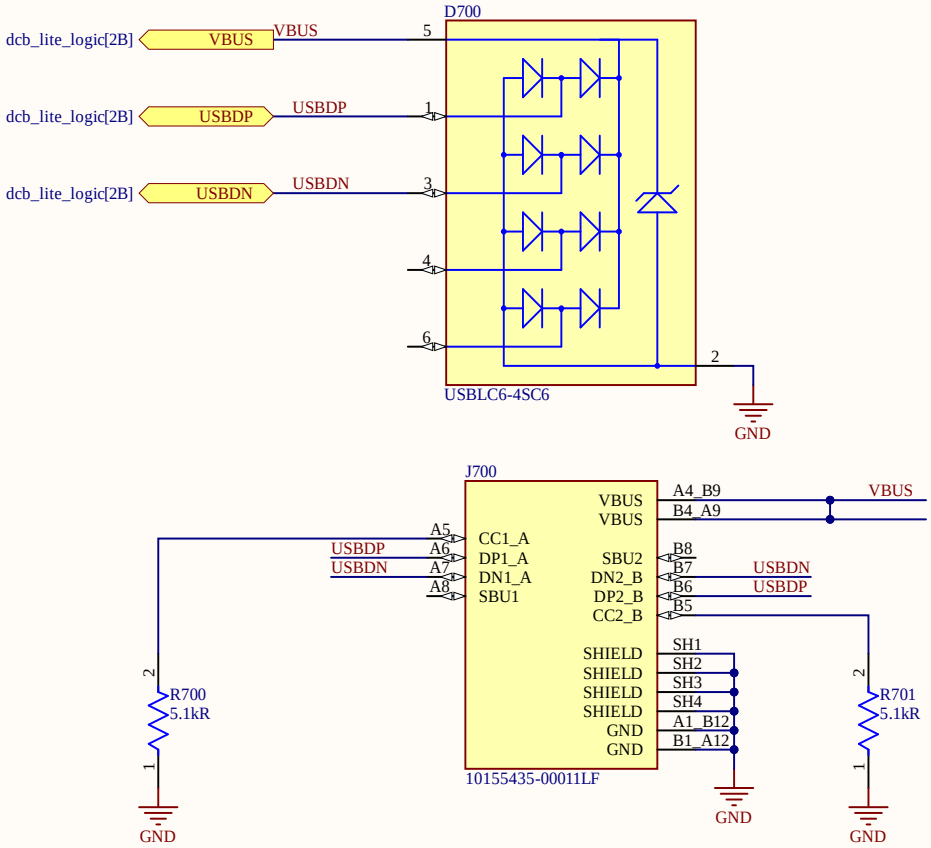

Title *			Made available under the CERN OHL v2.0
Size: A4	Number: *	Revision: *	blueacro.com
Date: 4/17/2026	Time: 5:12:03 PM	Sheet 5 of 10	github.com/blueacro
File: usb_input.SchDoc			

© 2024 StackFoundry LLC. All Rights Reserved.

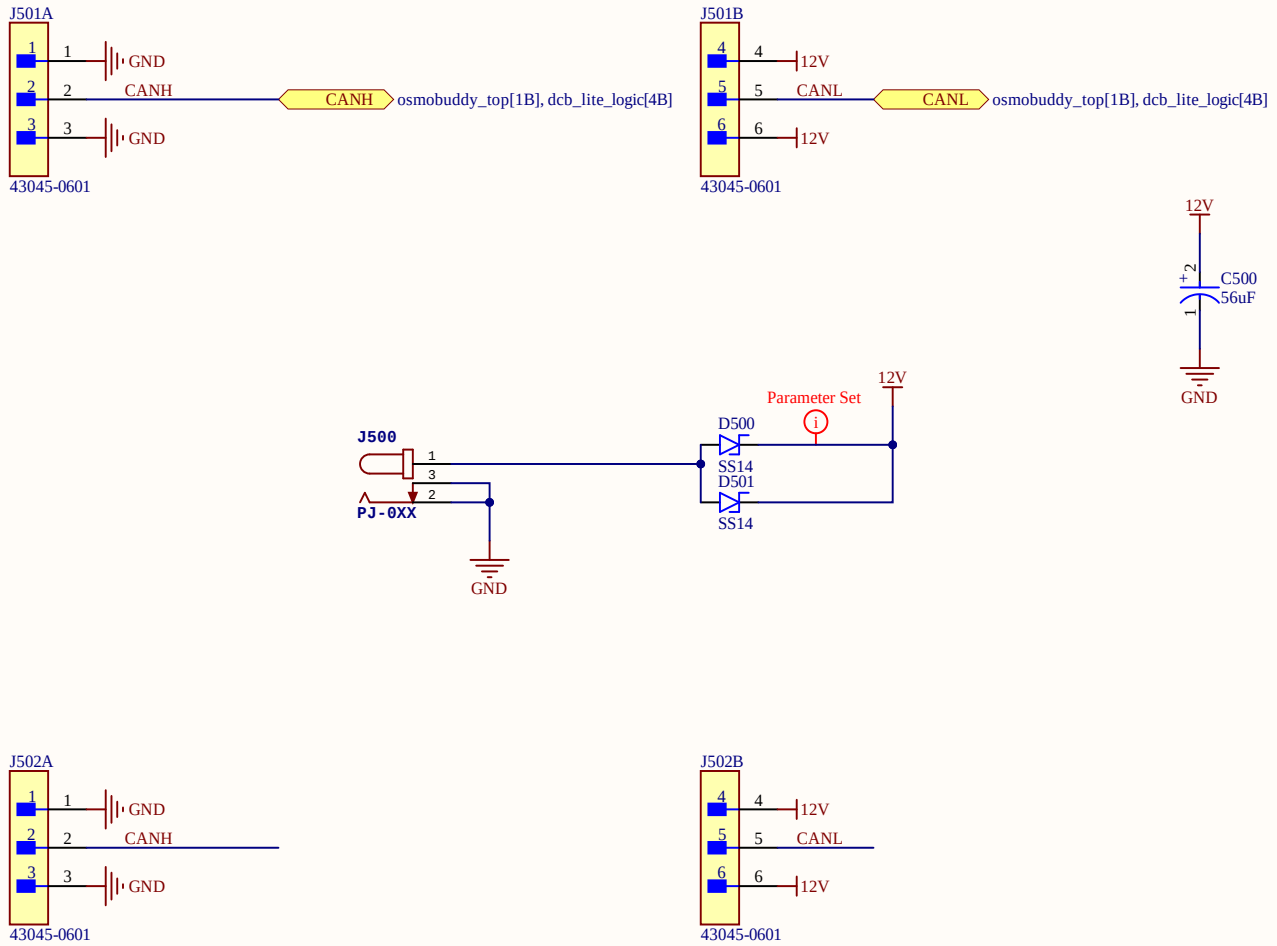

Title *			Made available under the CERN OHL v2.0
Size: A4	Number: *	Revision: *	blueacro.com
Date: 4/17/2026	Time: 5:12:03 PM	Sheet 6 of 10	github.com/blueacro
File: dcb_single_input.SchDoc			

© 2024 StackFoundry LLC. All Rights Reserved.

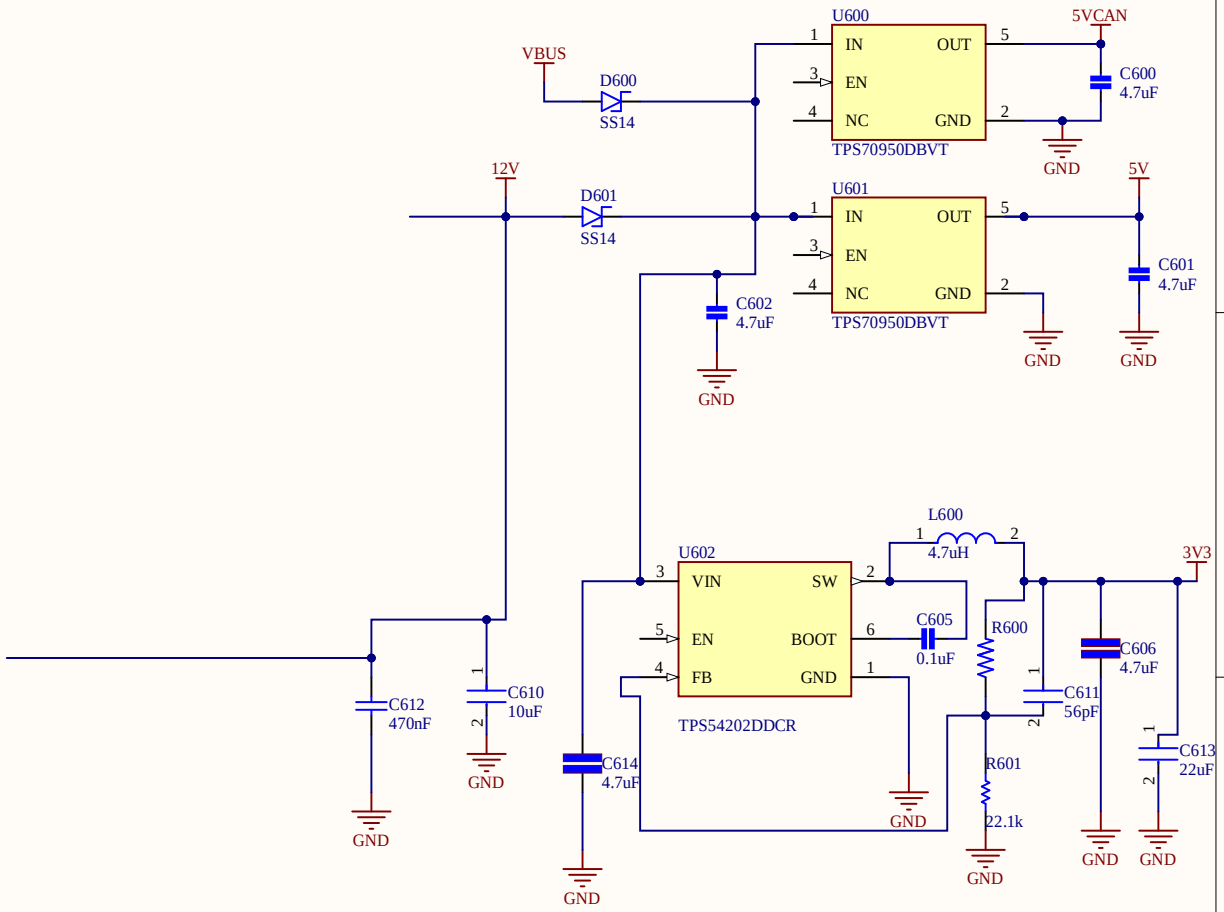

Title *			Made available under the CERN OHL v2.0
Size: A4	Number: *	Revision: *	blueacro.com
Date: 4/17/2026	Time: 5:12:03 PM	Sheet 7 of 10	github.com/blueacro
File: dcdc_60v_12v.SchDoc			

© 2024 StackFoundry LLC. All Rights Reserved.

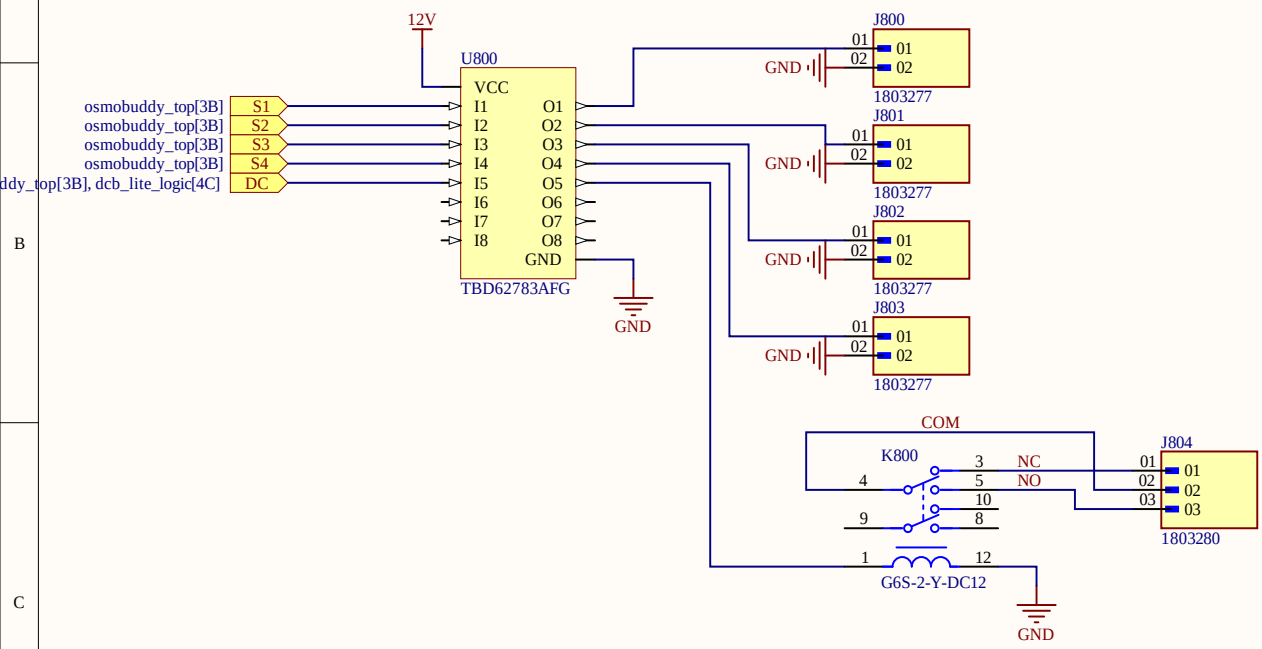

Title		
Size A	Number	Revision
Date: 4/17/2026		Sheet of
File: C:\Users\..\solenoid_channels.SchDoc		Drawn By:

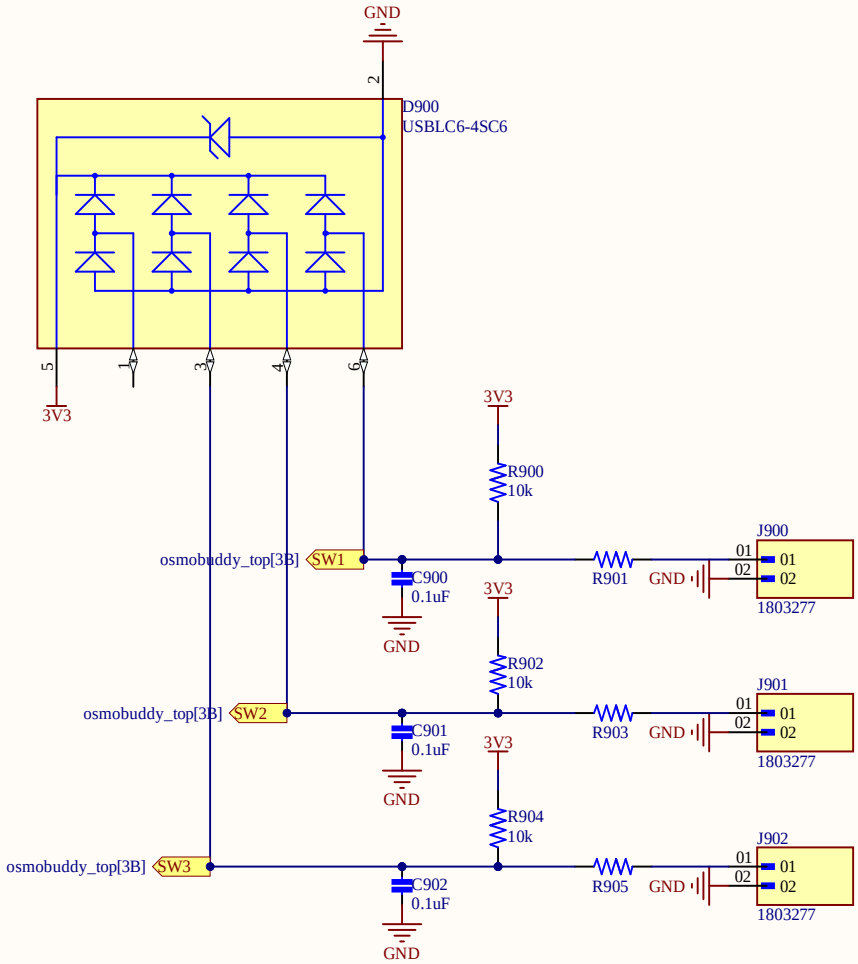

Title		
Size A	Number	Revision
Date: 4/17/2026		Sheet of
File: C:\Users\..\switch_input.SchDoc		Drawn By:

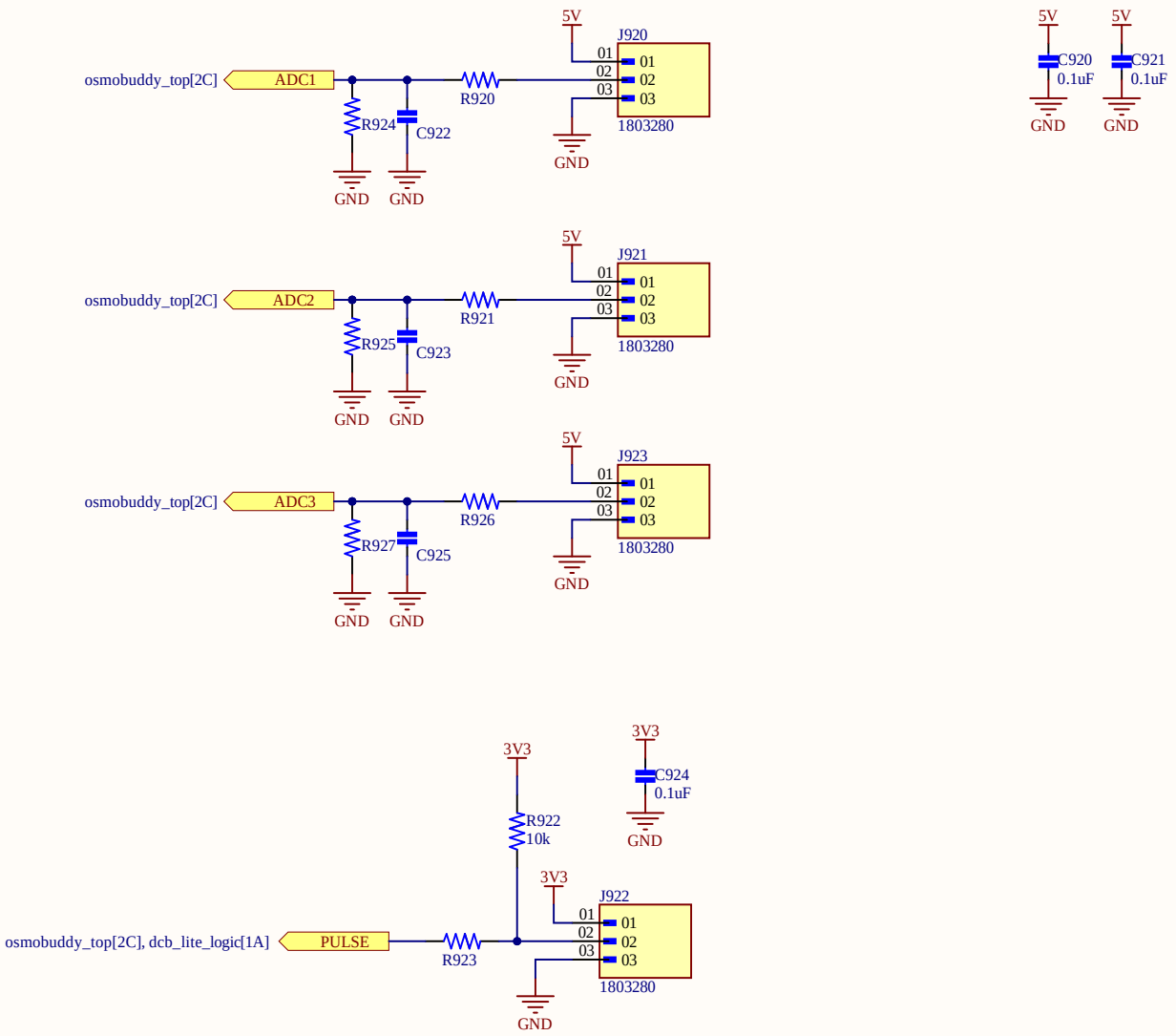

Title		
Size A	Number	Revision
Date: 4/17/2026		Sheet of
File: C:\Users\..\pressure_input.SchDoc		Drawn By: