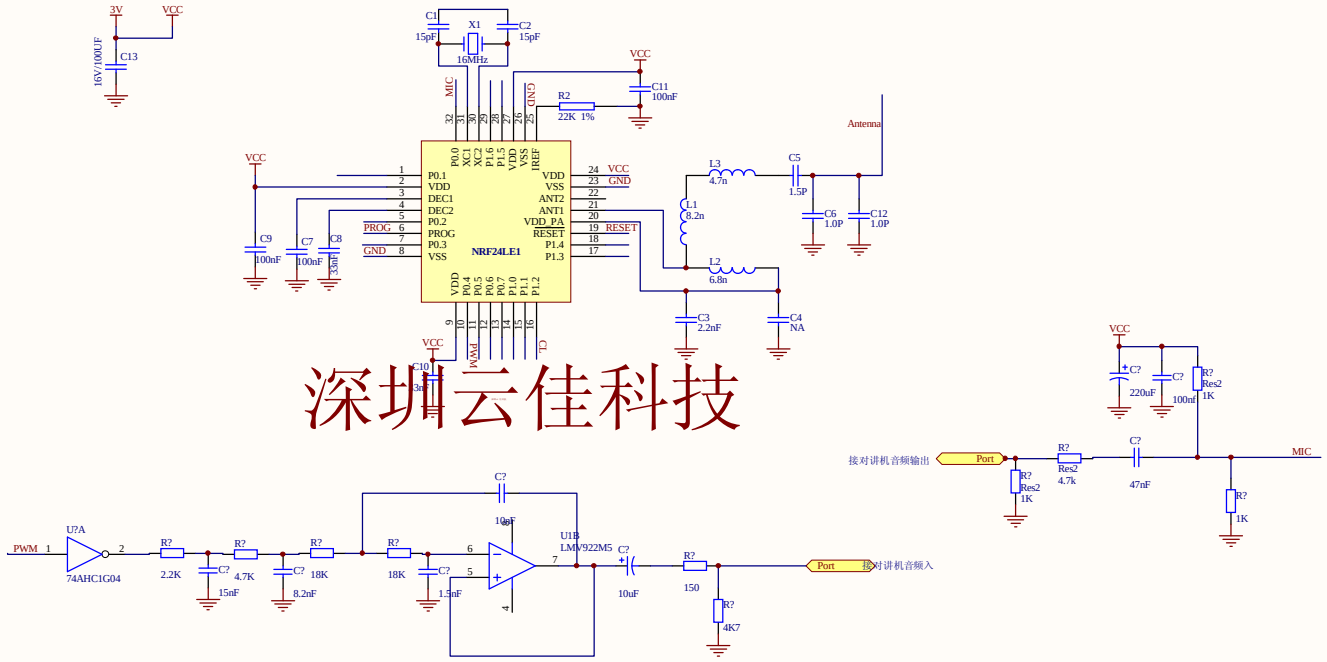

Title	深圳云佳科技	
Size B	Number	Revision
Date: 9-Nov-2011	Sheet of	
File: C:\Documents and Settings\Administrator\桌面\NRF24LE1.DDB	Drawn By:	