SH 1 DWG NO. 000-019-693

REVISIONS				
REV	DESCRIPTION	CHANGED BY	APPROVED BY	DATE
1	PRELIMINARY	CEO	JB	2015-12-14

NOTES:

1. THE PURPOSE OF THIS DRAWING IS TO SUPPLY REFERENCE DIMENSIONS OF THE VEHICLE'S PAYLOAD INTERFACE AND JOINING ORTMAN GROOVE.

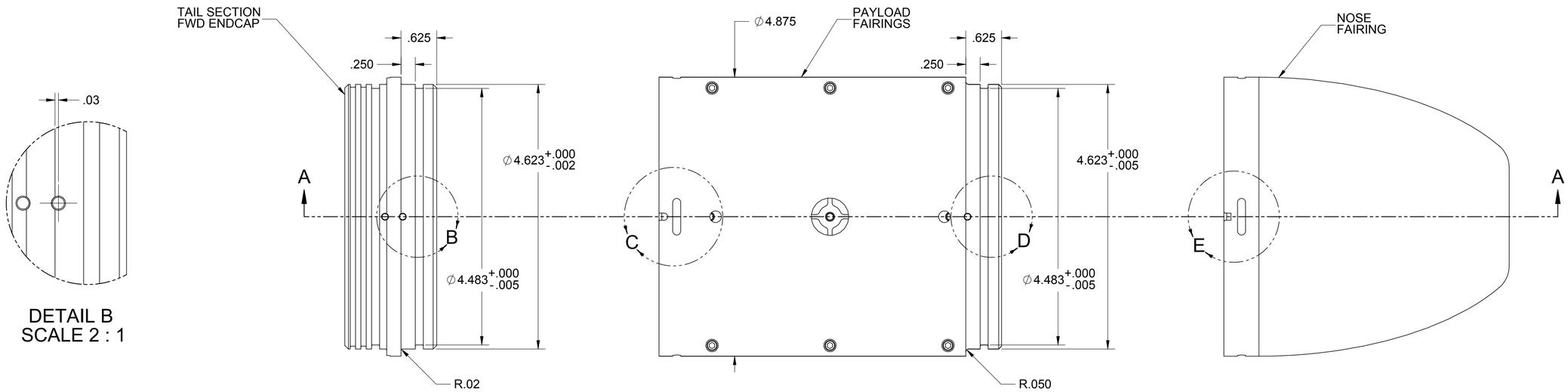

DETAIL B
SCALE 2 : 1

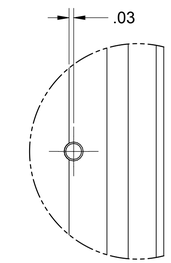

DETAIL D
SCALE 2 : 1

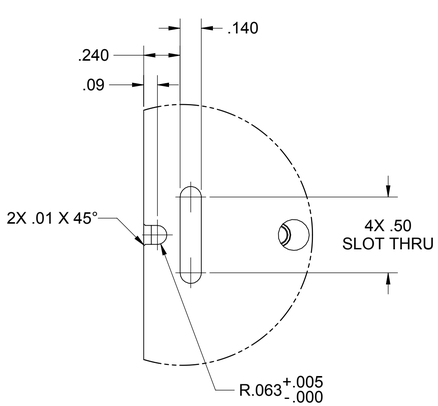

DETAIL C
SCALE 2 : 1

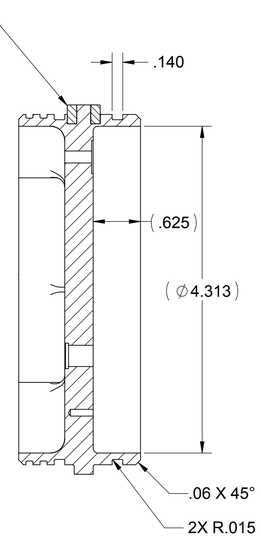

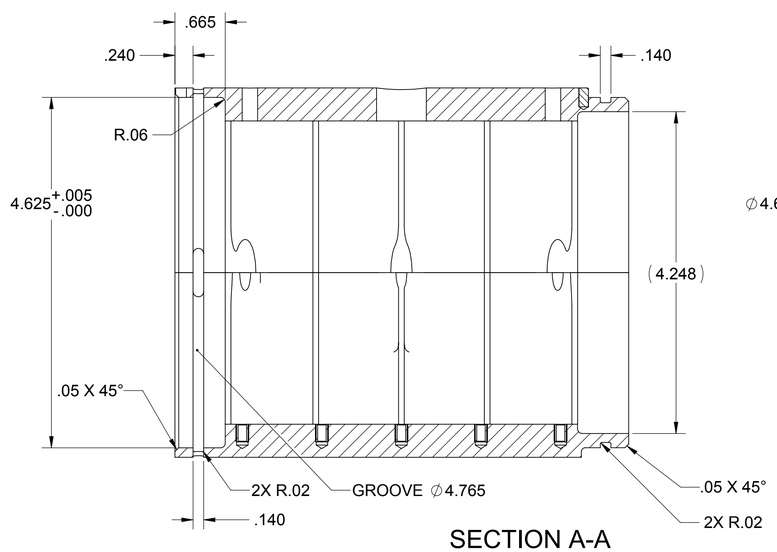

SECTION A-A

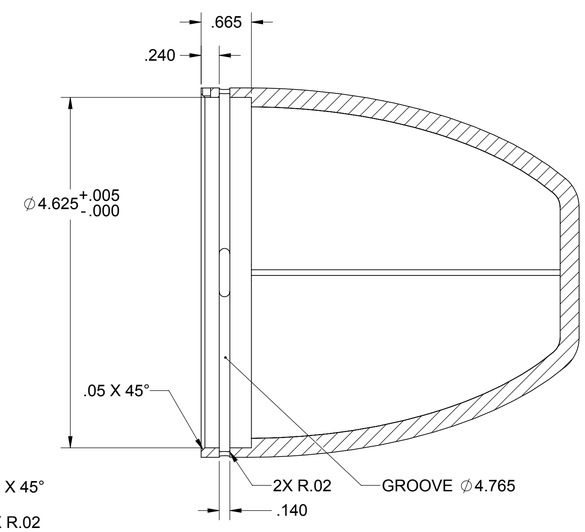

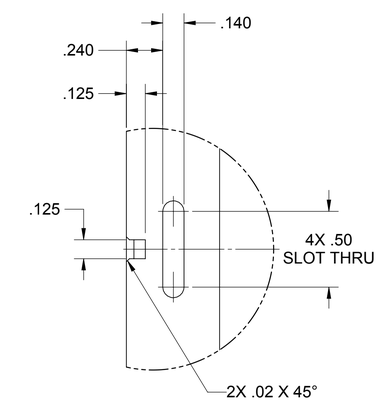

DETAIL E
SCALE 2 : 1

THIRD ANGLE PROJECTION

INTERPRET DIMENSIONS AND TOLERANCES PER ASME Y14.5 - 1994

PART NO. 000-019-693

UNLESS OTHERWISE SPECIFIED DIMENSIONS ARE IN INCHES [MM]

TOLERANCES

.X = ± .1 [3]
.XX = ± .01 [0.25]
.XXX = ± .005 [0.1]
ANGLES = ± 1/2°

DO NOT SCALE DRAWING

CHECKED BY: JB	DATE: 15-12-14	
DRAWN BY: CEO	DATE: 15-12-14	
DESIGNED BY: CEO	DATE: 15-12-14	
MATERIAL: N/A		
FINISH: N/A		
APPLICATION: SOLIDWORKS		

BLUEFIN ROBOTICS

DWG TITLE
PAYLOAD INTERFACE, ORTMAN GROOVE

SIZE	CAGE CODE	DWG NO.	REV
D	1LXF2	000-019-693	1

SCALE: 1:1 WEIGHT: N/A SHEET 1 OF 1

NOTICE: PROPRIETARY INFORMATION
© 2014 THIS DOCUMENT CONTAINS INFORMATION PROPRIETARY TO BLUEFIN ROBOTICS CORPORATION AND SHALL NOT BE REPRODUCED OR TRANSFERED TO OTHER DOCUMENTS OR DISCLOSED TO OTHERS OR USED FOR ANY PURPOSE OTHER THAN FOR WHICH IT IS FURNISHED WITHOUT THE PRIOR WRITTEN PERMISSION OF BLUEFIN ROBOTICS CORPORATION.