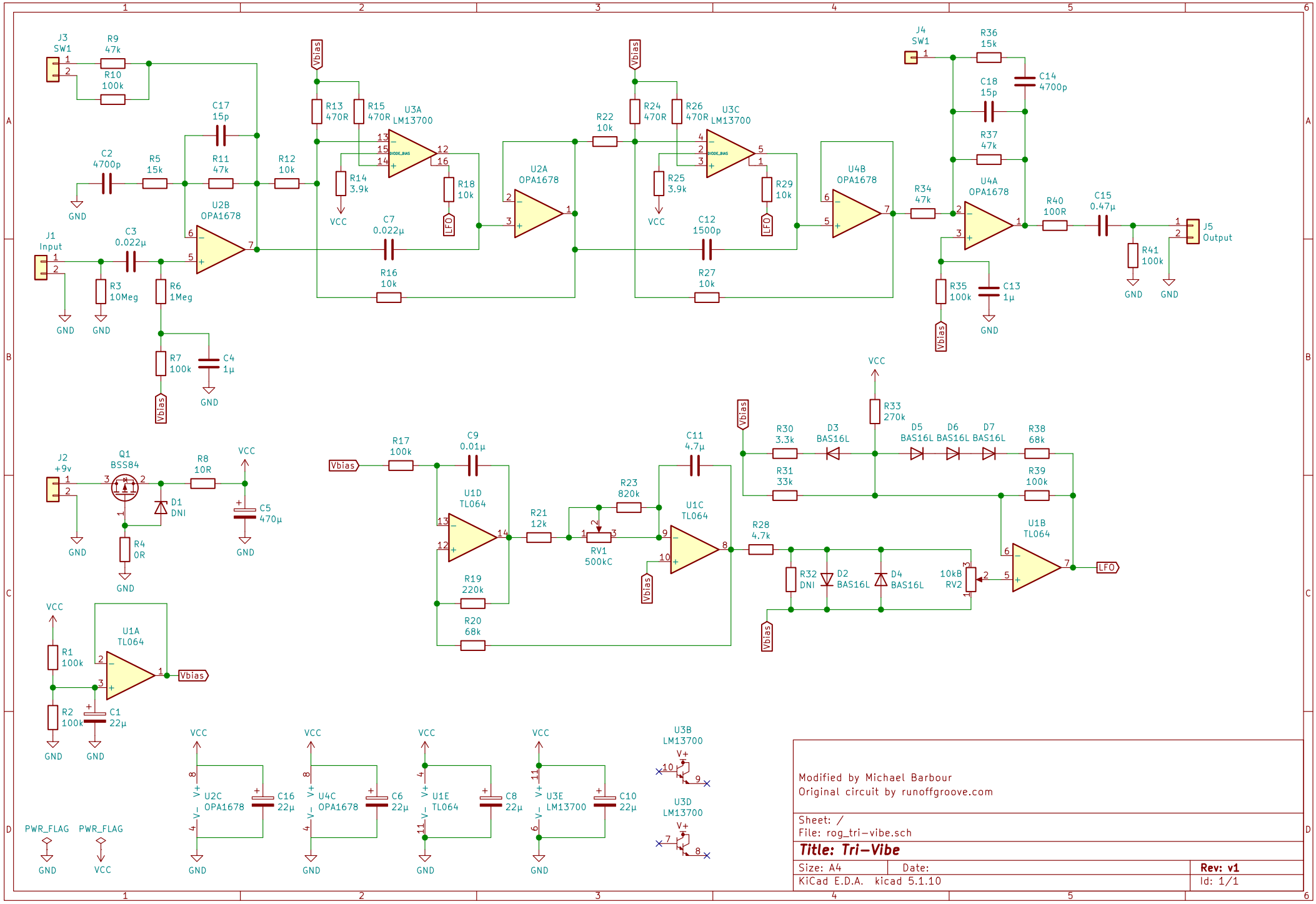

Modified by Michael Barbour
Original circuit by runoffgroove.com

Sheet: /
File: rog_tri-vibe.sch

Title: Tri-Vibe

Size: A4	Date:	Rev: v1
KiCad E.D.A. kicad 5.1.10		Id: 1/1