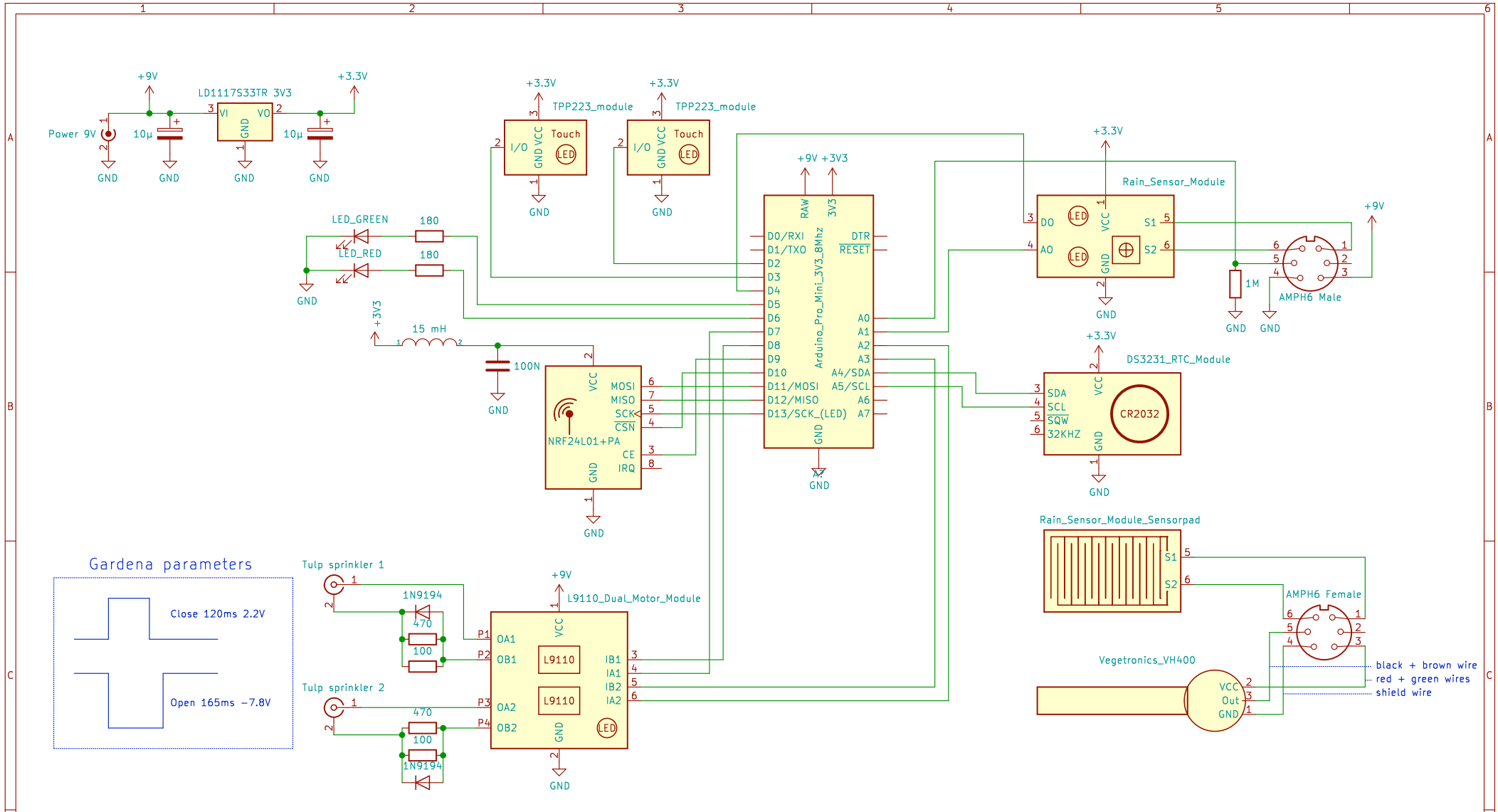

Sheet: /
File: sprinkler.sch

Title: MySensors Sprinkler

Size: A4	Date: 20180808	**Rev: 1**
KiCad E.D.A. eeschema (5.1.5-0)		Id: 1/1