Wavence UBT-S / UBT-T Quick Start Guide

3DB 28458 AAAA TNZZA 08

Documentation Center

UBT-T

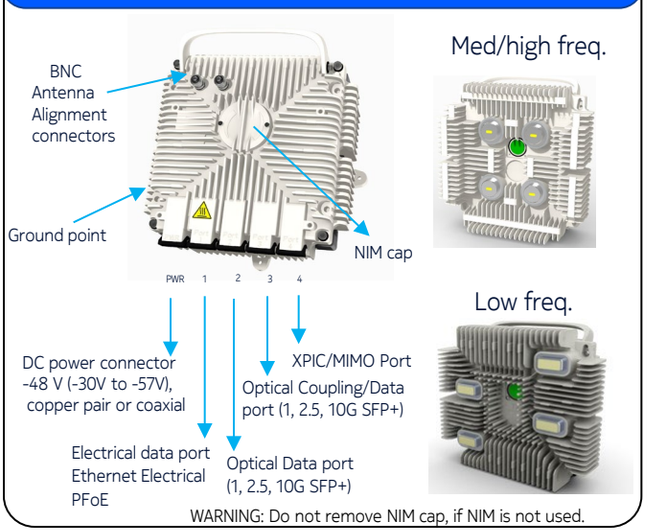

WARNING: Do not remove NIM cap, if NIM is not used.

AIM-T

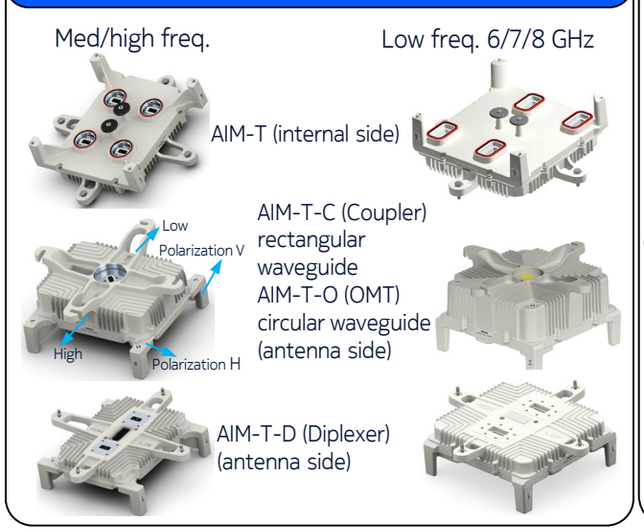

UBT-S

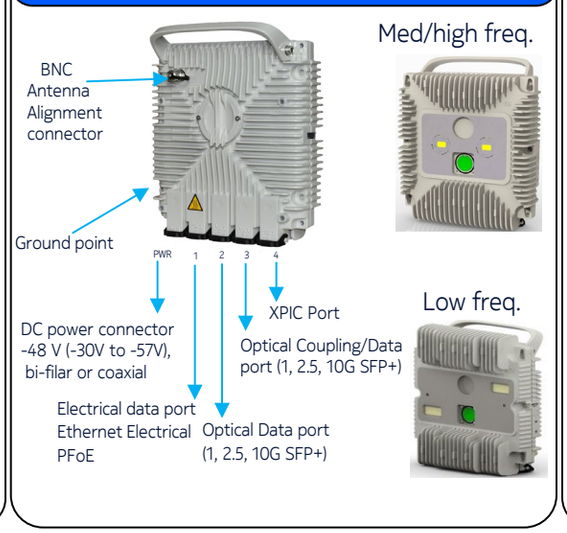

AIM-S

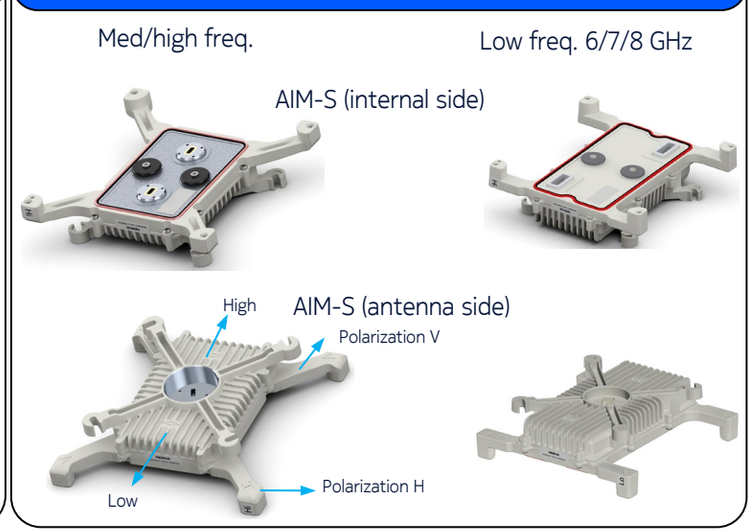

Direct UBT mount on integrated antenna

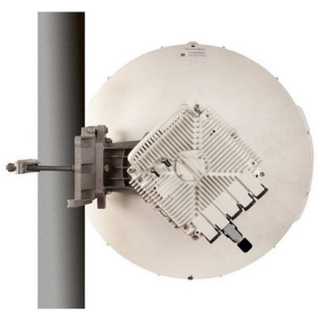

UBT on not integrated antenna

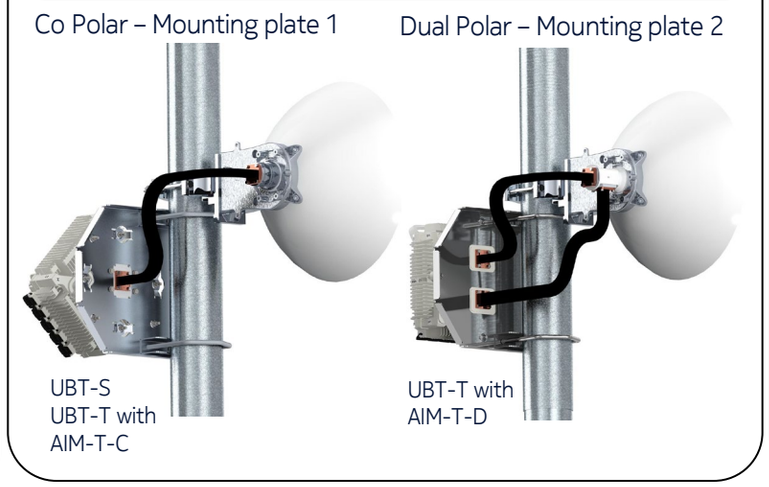

Connection to indoor units

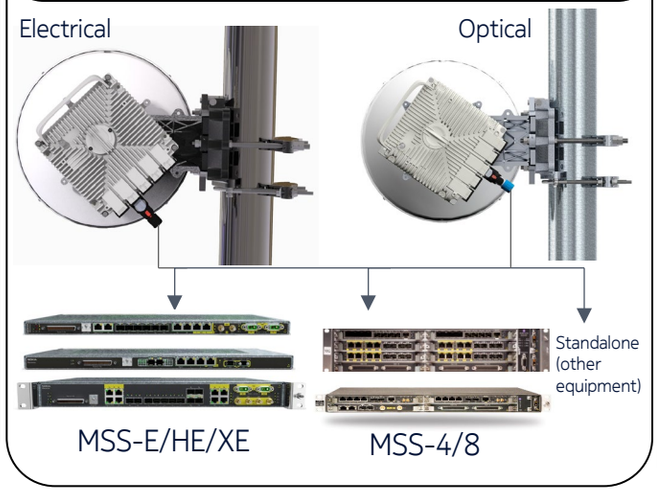

Wavence powering

From Flexi Outdoor Power Distribution Unit

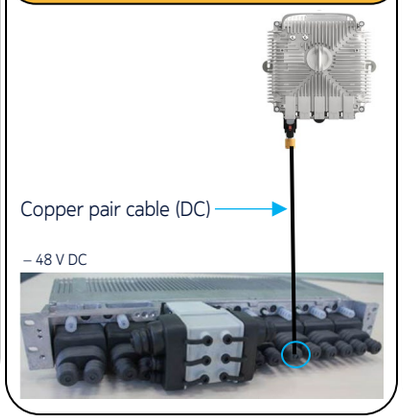

From MSS QMA port (EAC/MSS-HE)

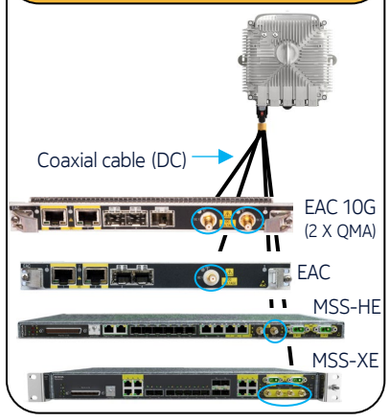

Example of UBT installation with MSS

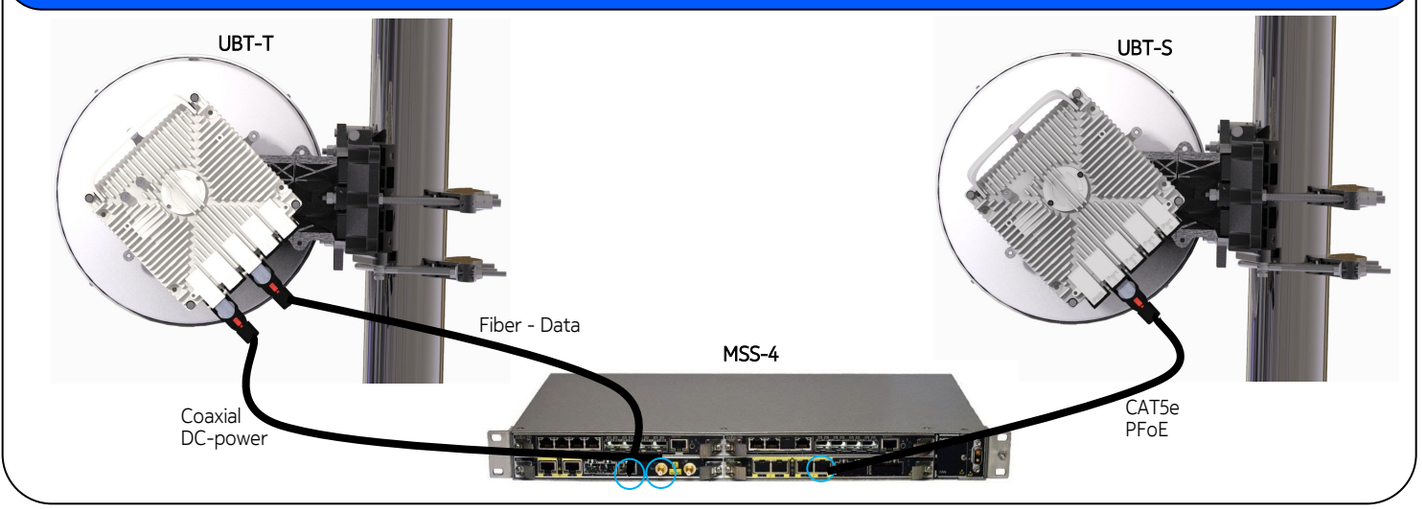

From Outdoor AC Power Supply (OACPS)

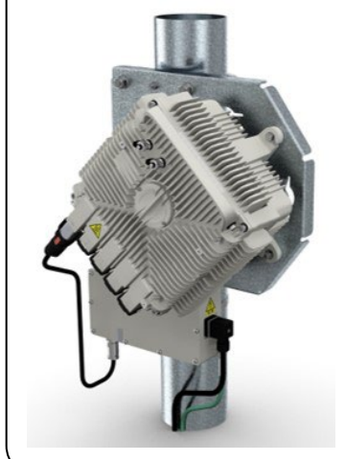

From Outdoor Power Injector (OPI)

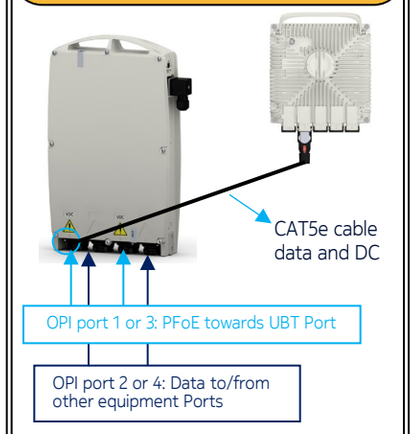

Up to 2 UBT can be powered by a common OPI.

Power Feed over Ethernet (PFoE)

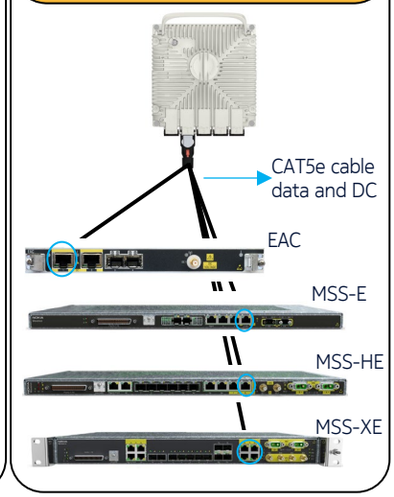

Installing Wavence UBT-S / UBT-T

3DB 28458 AAAA TNZZA 08
Manufacturing

1 Assemble AIM with radio

AIM-S and UBT-S

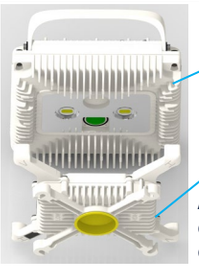

Pay attention to the High/Low indication matching.

Apply grease all over the thread of the fixing screws and only on those screws. A grease tube is supplied with the Grounding and Mounting Kit of UBT.

AIM-T and UBT-T

2 Install UBT on integrated antenna

2.1 Apply grease all over the thread of the screws. The grease is supplied with the antenna.

Tongyu/Commscope mounting plate

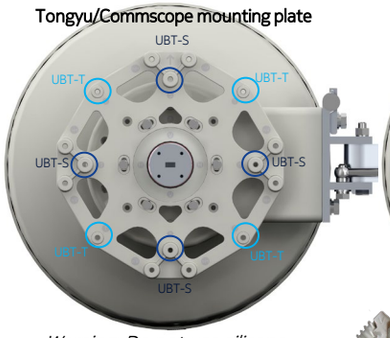

RFS mounting plate

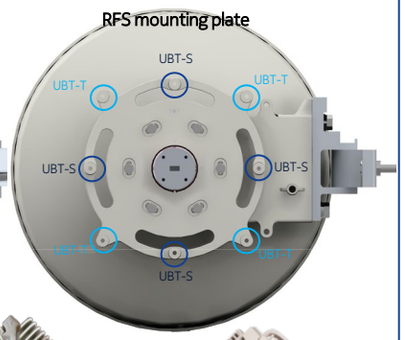

Warning: Do not use silicone grease on the O-ring nose.

2.2 Place the screws in the fixing points depending on the UBT type.

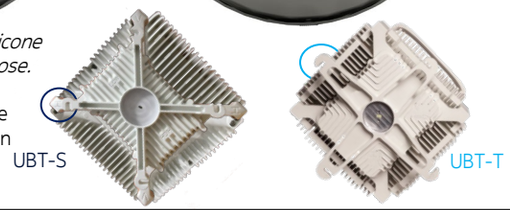

2.3 Place the UBT in the correct orientation depending on the required polarization (H or V).

Vertical Polarization

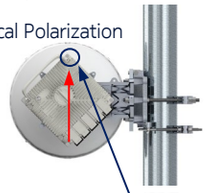

Horizontal Polarization

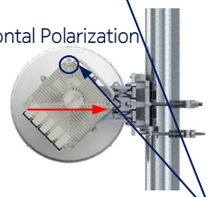

Polarization is indicated by the diagonal from the power port. In case of AIM-T-O, this is valid for Carrier B.

2.4 Push and rotate the UBT as in the indicated curved motion.

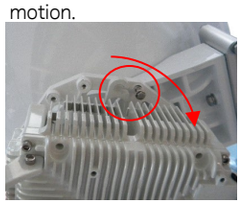

2.5 In this hanging position, tighten the screws.

A mark on the rear side of the UBT indicates the polarization.

3 Prepare the external coupler

3.1 Set the coupler according to the antenna's polarization.

V Pol

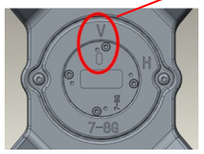

Polarization V: indicator is pointing on the V mark. Coupler can also be set in Polarization H by rotating the central plate so the indicator is pointing on the H mark.

3.2 Apply grease all over the thread of the fixing screws and only on those screws. A grease tube is supplied with the external coupler.

3.3 Attach the coupler to the antenna using the same fixing points as the UBT-T

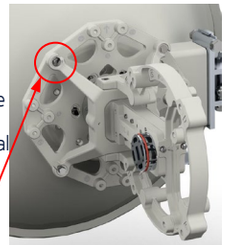

4 Install UBT on external coupler

4.1 Rotate so the mark is aligned to T or S depending on the UBT to be attached.

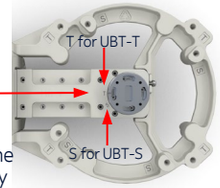

4.2 Apply grease all over the thread of the fixing screws and only on those screws. A grease tube is supplied with the external coupler.

4.3 Mount the UBTs only as shown in the picture:

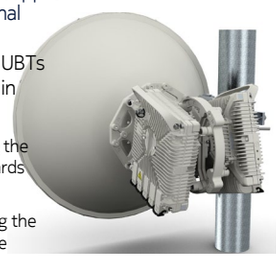

Left UBT: having the connectors towards the antenna.

Right UBT: having the connectors in the opposite way.

For other install configurations, see Hardware Installation Manual.

5 Install UBT on external OMT

External OMT

Apply grease all over the thread of the fixing screws and only on those screws. A grease tube is supplied with the external OMT.

Install UBT on the external OMT as shown:

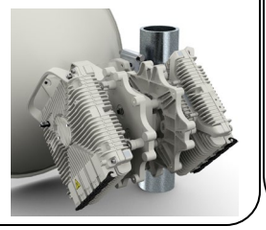

6 Install UBT-T on OMT-C

OMT-C

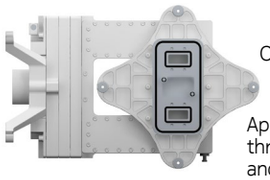

OMT-C (side view)

Apply grease all over the thread of the fixing screws and only on those screws. A grease tube is supplied with the OMT-C.

Attach the OMT-C to the antenna using the same fixing points as the UBT-T.

Install UBT-T on the OMT-C as shown:

Note: The additional sway bar is mandatory.

7 Install UBT on a non-integrated antenna

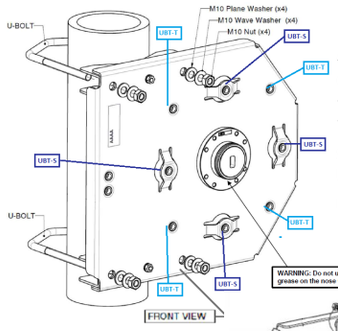

Apply grease all over the thread of the fixing screws. The grease is supplied with the UBT pole mounting kit.

Follow the instructions of *Instruction assembly UBT Pole Mounting and Noses from 6GHz to 42GHz for Non-Integrated Configuration (3CC503190000RJZZA).*

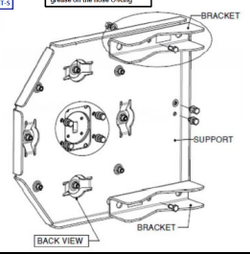

8 Ground the UBT

Connect the UBT ground point to the nearest grounding plate using the ground cable 16mm² 1AC001060084. Washer, screw and lug are provided with the UBT.

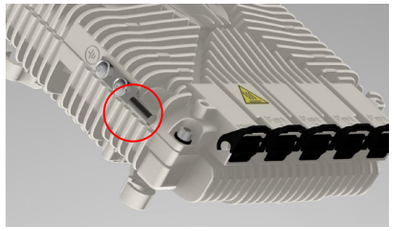

Apply grease around the grounding clamp assembly. A grease tube is supplied with the Grounding and Mounting kit of UBT.

9 Assemble and connect DC connector

9.1 Assemble the OCTIS DC connector and connect the DC cable following the instructions' leaflet.

9.2 Plug in to PWR port.

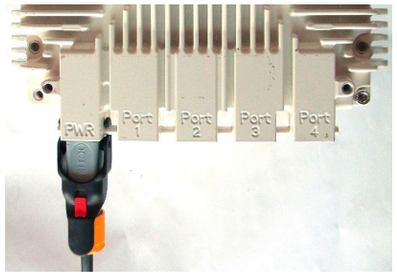

10 Assemble and connect RJ45 connector

10.1 Assemble the RJ45 on the ethernet cable using the RJ45 tool.

10.2 Assemble the OCTIS RJ45 connector following the instructions' leaflet.

10.3 Plug in to port 1.

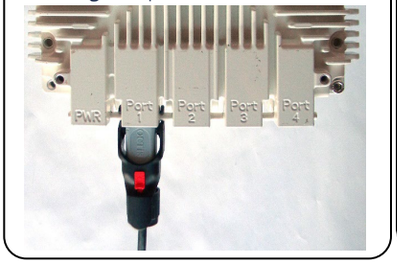

11 Assemble and connect SFP connector

11.1 Assemble the OCTIS SFP connector following the instructions' leaflet.

11.2 Plug in to port 2 or 3.

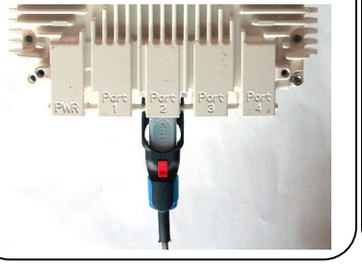

12 UBT and OCTIS caps

12.1 Plug cap of UBT port inside corresponding OCTIS cap.

12.2 Attach OCTIS cap with tie-rap to UBT lever (photo below) or to tower.

Note: In this way, we avoid losing any caps during maintenance activity.

Note: After installation of the UBT, protection caps on unused ports should be inspected for damage.

13 Ground the indoor-outdoor cables

13.1 Put one grounding kit :

- On top, when it comes on the tower
- On bottom, when it leaves the tower
- At the entrance of the building

Maximum distance between 2 Grounding Kits: 50m

Self-amalgamating tape is recommended.

13.2 Connect the grounding kit to the ground plate.

– Grounding kit for Ethernet cable or coaxial cable (Ø 6.85) 1AD040130004
– Grounding kit for coaxial cable (Ø 10.3) 1AB128500002

14 Perform alignment

14.1 Align the antenna.

14.1.1. Plug the BNC-to-banana adapter or cord on the UBT.

(Either the left or the right BNC may be used.)

14.1.2 Plug the banana plugs into the multi-meter.

14.1.3 Adjust the elevation and azimuth to the maximum RSL [lobe number 2 (Main lobe)].

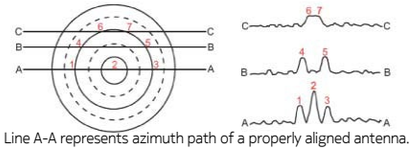

Line A-A represents azimuth path of a properly aligned antenna.

14.2 For XPIC maximize the XPD value shown in the craft terminal by polarization alignment:

1) For UBT-T with AIM-T-O: rotate the antenna axis acting on the antenna interface (+/-5° rotation range).

2) For systems with external OMT: rotate the OMT on its rotation range.

Convert UBT SA to Split-mount

This operation is mandatory only if the UBT has been used in Standalone prior to any re-usage in Split-mount. This step is not needed in case the UBT has not been connected to SA WebCT before.

1. Open the UBT SA WebCT. From Monitoring & Maintenance run the Scratch DB command.
2. Power off the radio.
3. Connect the radio in split-mount.
4. Power on the radio.

Contact support

- **To access Nokia Support Portal, go to:** https://customer.nokia.com/support/s
- **Product documentation:** https://documentation.nokia.com/aces/cgi-bin/au_doc_list.pl and select 9500 MPR (Microwave Packet Radio).
- **Technical support:** On the Emergency Contact area (top right side of Support Portal page), select your country from the drop down list and click SUBMIT. The contact information is displayed.