Wavence UBT-m 80GHz Quick Start Guide

applies to UBT-m, UBT-mX, UBT-mU, UBT-m2, UBT-mX2, UBT-mU2, UBT-mXP

3DB 28459 ABAA TNZZA 08

Documentation Center

UBT-m

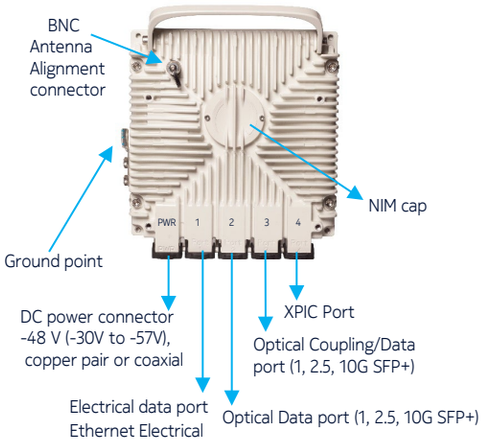

UBT-mU (antenna side)

WARNING: Do not remove NIM cap, if NIM is not used.

[1+0]

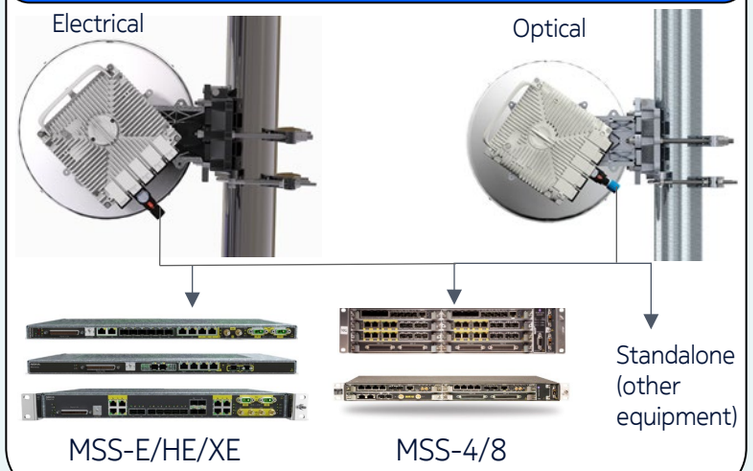

[1+0] 10Gbps Optical

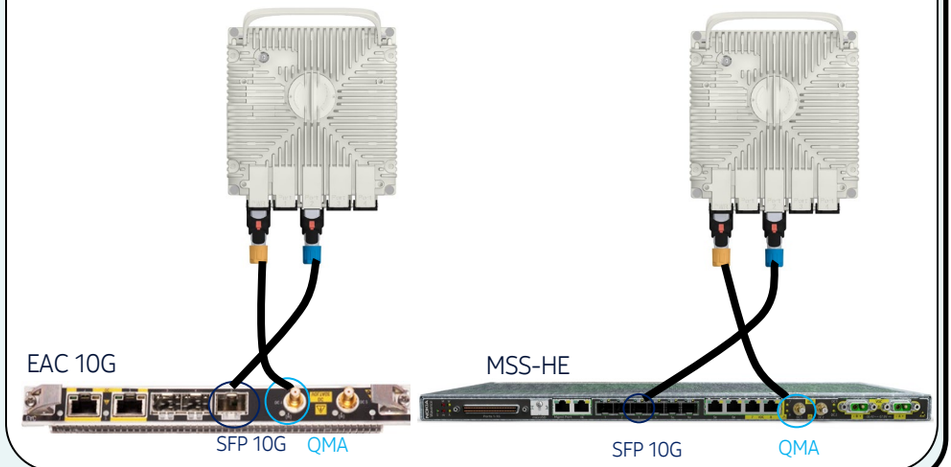

Antenna Dual Polar

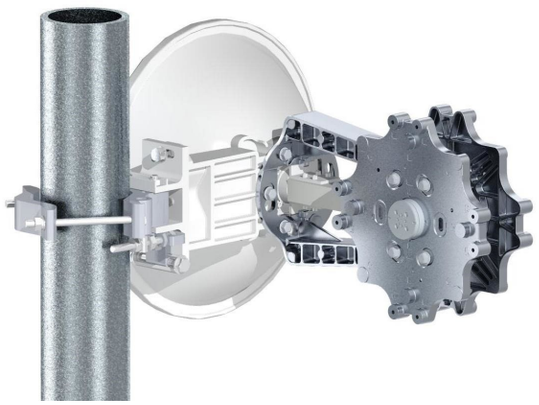

[2+0] XPIC

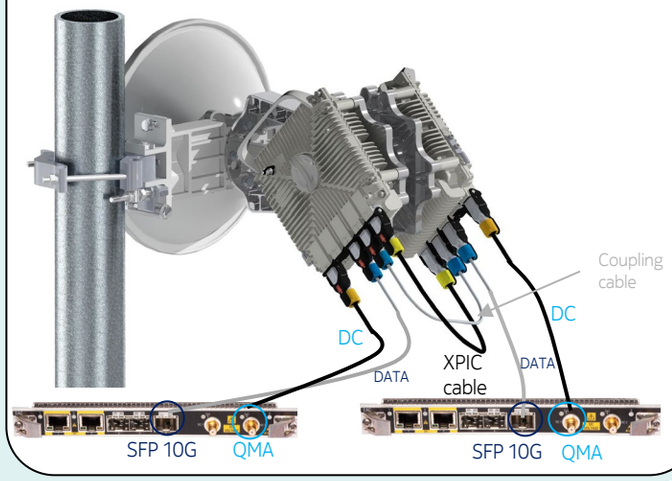

Carrier Aggregation (Dual Band Antenna)

Carrier Aggregation (Dual Band Antenna + UBT-m + UBT-T)

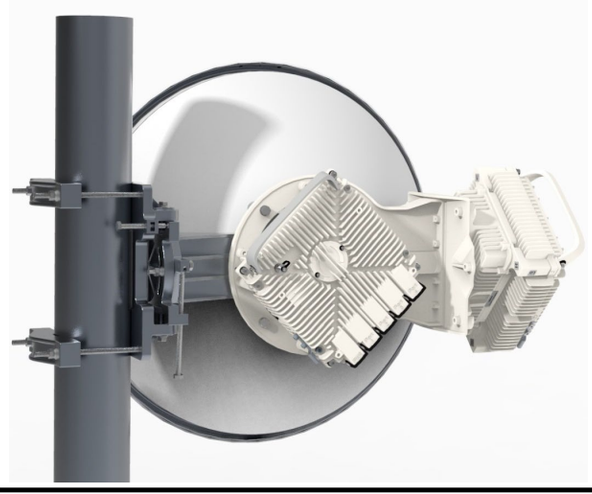

Wavence powering

From Outdoor AC Power Supply (OACPS)

From Flexi Outdoor Power Distribution Unit

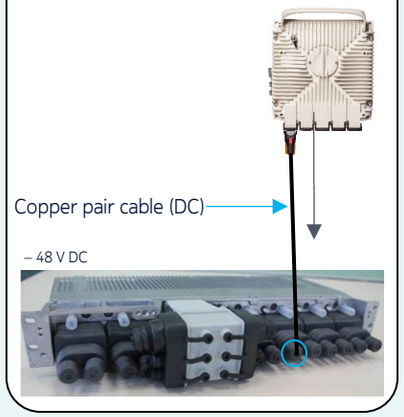

[1+0] 1 - 2.5Gbps Optical

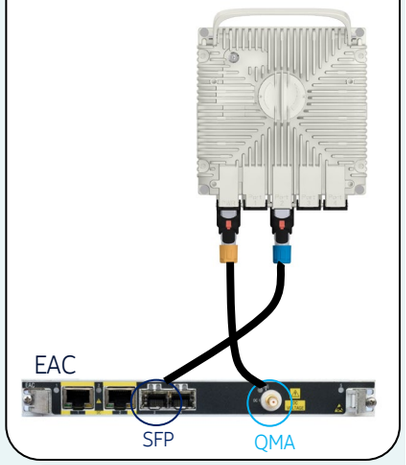

From MSS QMA port (EAC/MSS-HE)

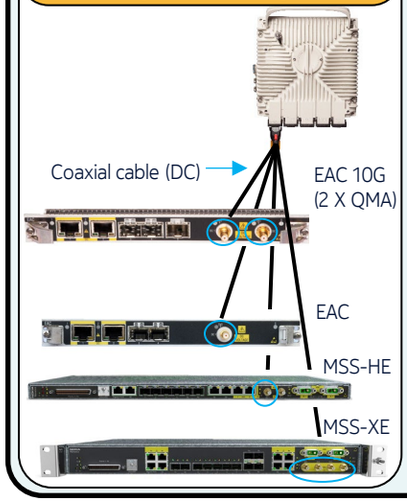

From Outdoor Power Injector (OPI)

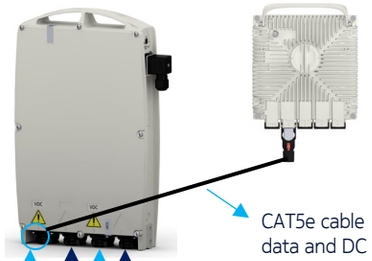

Up to 2 UBT-m 80GHz can be powered by a common OPI.

Power Feed over Ethernet (PFoE) Max 1Gbps

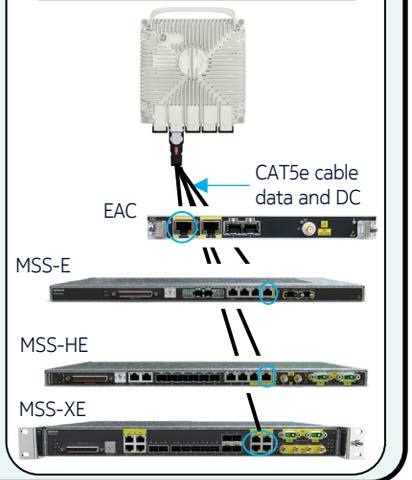

Installing Wavence UBT-m 80GHz

3DB 28459 ABAA TNZZA 08
Manufacturing

1 Install UBT-m 80GHz on integrated antenna

1.1 Apply grease all over the thread of the screws. The grease is supplied with the antenna.

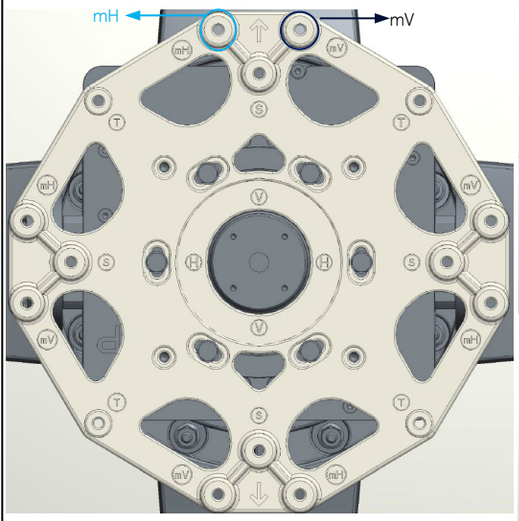

Tongyu and Commscope mounting plate

mH: UBT-m on H polarization

mV: UBT-m on V polarization

1.2 Place the screws in the fixing points depending on the antenna's polarization.

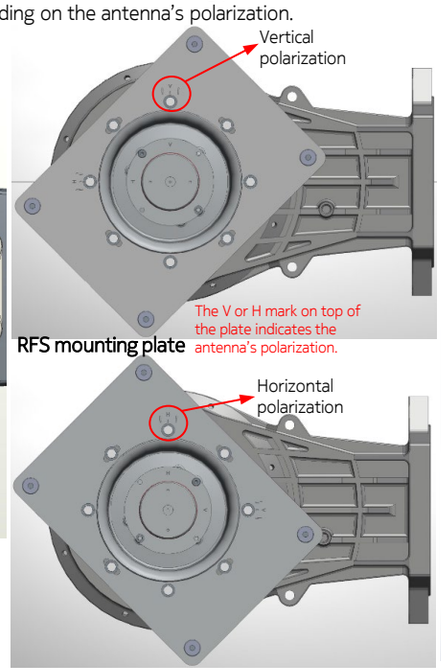

1.3 Place the UBT.

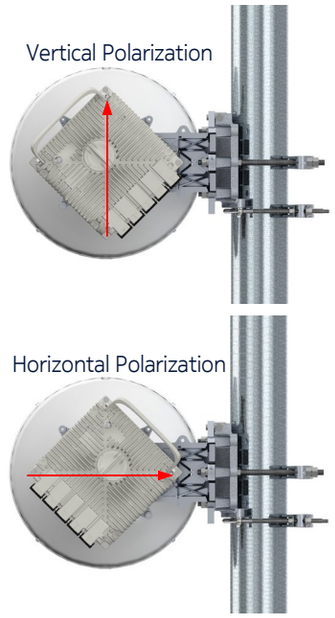

Hint: Polarization is indicated by the diagonal from the power port.

1.4 Insert the long screws on the UBT and tighten.

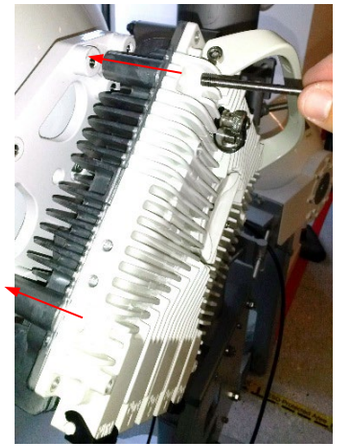

WARNING: The alignment pins in the nose receptable are delicate, therefore the positioning of the ODU must be performed carefully to avoid any damage.

Apply grease all over the thread of the fixing screws and only on those screws. A grease tube is supplied with the Grounding and Mounting Kit of UBT.

2 Install UBT-m 80GHz on Dual Polar Antenna

Mount the UBT-m 80Ghz on Dual Polar Antenna only as shown in the picture (ports pointing in the same direction).

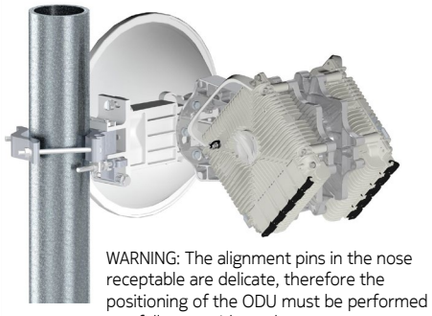

WARNING: The alignment pins in the nose receptable are delicate, therefore the positioning of the ODU must be performed carefully to avoid any damage.

Apply grease all over the thread of the fixing screws and only on those screws. A grease tube is supplied with the Grounding and Mounting Kit of UBT.

3 Other cases of installations

UBT-mU pole mount :
Please refer to the notice delivered with the pole mount in order to perform the assembly.

Dual Band Antenna :
Please refer to the notice delivered with the Dual Band Antenna in order to perform the assembly.

4 Ground the UBT-m 80GHz

Connect the UBT ground point to the nearest grounding plate using the ground cable 16mm² 1AC001060084. Washer, screw and lug are provided with the UBT.

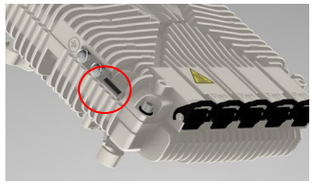

Apply grease around the grounding clamp assembly. A grease tube is supplied with the Grounding and Mounting kit of UBT.

Examples of UBT installation with MSS

UBT-m 80GHz

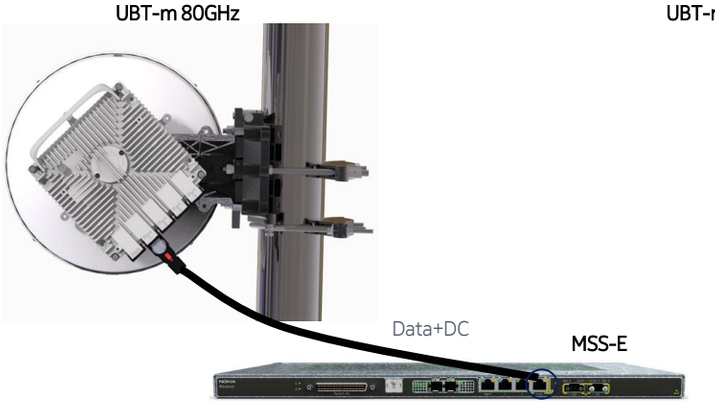

UBT-m 80GHz + UBT-T Carrier Aggregation 2+0

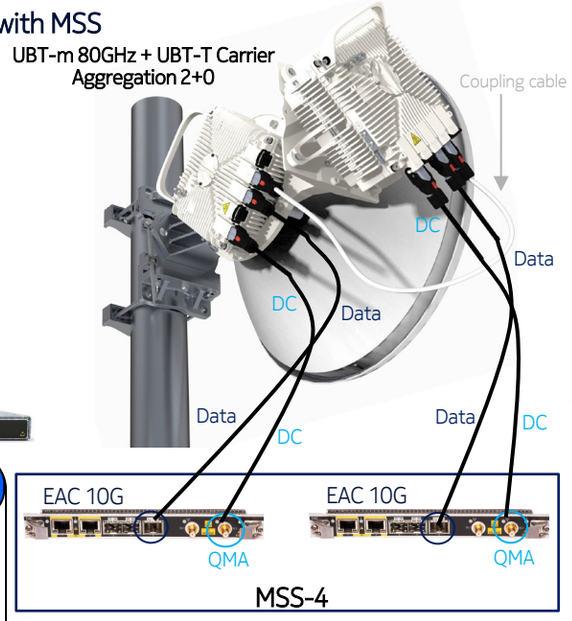

5 Assemble and connect DC connector

5.1 Assemble the OCTIS DC connector and connect the DC cable following the instructions' leaflet.

5.2 Plug in to PWR port.

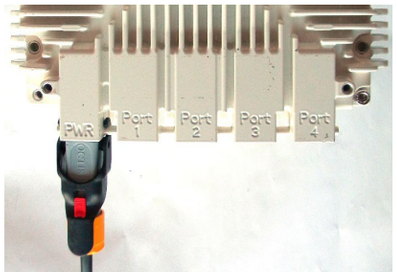

6 Assemble and connect RJ45 connector

6.1 Assemble the RJ45 on the ethernet cable using the RJ45 tool.

6.2 Assemble the OCTIS RJ45 connector following the instructions' leaflet.

6.3 Plug in to port 1.

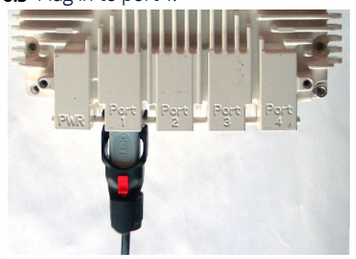

7 Assemble and connect SFP connector

7.1 Assemble the OCTIS SFP connector following the instructions' leaflet.

7.2 Plug in to port 2 or 3.

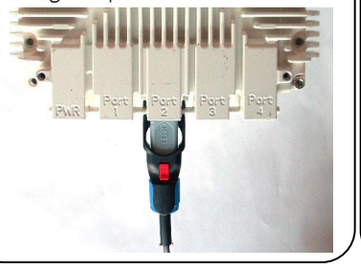

8 UBT-m 80GHz and OCTIS caps

8.1 Plug cap of UBT port inside corresponding OCTIS cap.

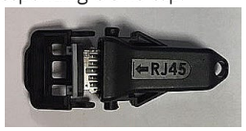

8. 2 Attach OCTIS cap with tie-rap to UBT lever (photo below) or to tower.

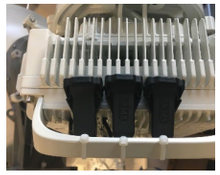

Note: In this way, we avoid losing any caps during maintenance activity.

Note: After installation of the UBT, protection caps on unused ports should be inspected for damage.

9 Ground the indoor-outdoor cables

9.1 Install one grounding kit :
- On top, when it comes on the tower
- On bottom, when it leaves the tower
- At the entrance of the building

Maximum distance between 2 Grounding Kits: 50m

Self-amalgamating tape must be used.

9.2 Connect the grounding kit to the ground plate.
- Grounding kit for Ethernet cable or coaxial cable (Ø 6,85) 1AD040130004
- Grounding kit for coaxial cable (Ø 10,3) 1AB128500002

Contact support

To access Nokia Support Portal, go to:
https://customer.nokia.com/support/s/

Product documentation:
https://documentation.nokia.com/aces/cgi-bin/au_doc_list.pl
and select 9500 MPR (Microwave Packet Radio).

Technical Support:
https://customer.nokia.com/s/product2/01t41000004g9E8AAI/9500-mpr-microwave-packet-radio

10 Perform alignment

10.1 Align the antenna.

10.1.1 Plug a BNC-to-banana adapter or cord on the UBT.

(Either the left or the right BNC may be used.)

10.1.2 Plug the banana plugs into the multi-meter.

10.1.3 Adjust the elevation and azimuth to the maximum RSL [lobe number 2 (Main lobe)].

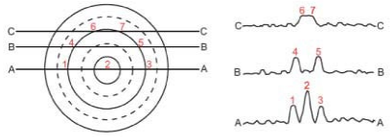

Line A-A represents azimuth path of a properly aligned antenna.

10.2 For XPIC maximize the XPD value shown in the craft terminal by polarization alignment.

For systems with external OMT: rotate the OMT on its rotation range.

11 Convert UBT Standalone (SA) to Split-mount

This operation is mandatory only if the UBT has been used in Standalone prior to any re-usage in Split-mount.

This step is not needed in case the UBT has not been connected to SA WebCT before.

11.1 Open the UBT SA WebCT. From Monitoring & Maintenance run the Scratch DB command.

11.2 Power off the radio.

11.3 Connect the radio in split-mount.

11.4 Power on the radio.