Experiments in Fluids 7, 344–354 (1989)

Experiments in Fluids

© Springer-Verlag 1989

# Isothermal flow in a gas turbine combustor – a benchmark experimental study

**P. Koutmos** and **J. J. McGuirk**

Imperial College of Science and Technology, Mechanical Engineering Dep., Fluids Section, Exhibition Road, London SW7 2BX, UK

**Abstract.** An experimental investigation of the three-dimensional flow field within a water model of a can-type gas turbine combustion chamber is presented. Flow visualisation demonstrated that internal flow patterns simulated closely those expected in real combustors. The combustor comprised a swirl driven primary zone, annulus fed primary and dilution jets and an exit contraction nozzle. LDA measurements of the three mean velocity components and corresponding turbulence intensities were obtained to map out the flow development throughout the combustor. Besides providing information to aid understanding of the complex flow events inside combustors, the data are believed to be of sufficient quantity and quality to act as a benchmark test case for the assessment of the predictive accuracy of computational models for gas-turbine combustors.

## 1 Introduction

New designs of gas turbine combustion systems are often aimed at simultaneous improvements in several, if not all, combustor performance parameters. High priority is usually given to expansion of the range of stable operating conditions, improvement of exit temperature traverses, and (more recently) reduced pollutant emissions. All of these features are crucially dependent on internal flow patterns and the associated rates of mixing. This fact alone has motivated the need for a better and more fundamental understanding of the processes taking place inside a combustion chamber. Further, no design techniques currently in general use can produce a combustor design that does not require subsequent development and the development process for a system which meets at least some of the above goals has also to date been largely experimental and empirical. Whilst this approach has been reasonably successful, increased use of computational procedures in parallel to experimentation would be expected to accelerate the development of improved combustor designs and reduce development costs. This is particularly evident in view of the number of interacting flow parameters within the combustor such as swirler flow, jet and cooling slot flows, influence of downstream exit contraction nozzle etc. Needless to say, the availability of suitable experimental data is also critical to the development and validation of mathematical models for combustor flows (Bruce et al. 1979; Coupland and Priddin 1986; Sturgess and Syed 1980). The motivation behind the investigation described herein was therefore twofold: (i) to provide comprehensive measurements which can be used with confidence to assess and further develop existing numerical models, and (ii) at the same time to provide data which allow better understanding of the parameters controlling the complex aerodynamics of combustor flows.

Because of the complexity of such flows the approach usually adopted for the validation of numerical models (and thus the acquisition of suitable data) is to divide the real flow into a number of well-controlled component flows that emphasise only one or two of the important physical processes at a time. Many of the experimental investigations which have provided detailed information on internal combustor flow fields have consequently employed axisymmetric geometries. This minimises the number of circumferential planes on which measurements must be made and allows attention to be focussed on, for example, the influence of swirl on simulated primary zone flow structure (Altgeld et al. 1983; Vu et al. 1983; Rhode et al. 1983; La Rue et al. 1984). Although undoubtedly important for the immediate swirler vicinity, the fact that in real combustors the axisymmetry is destroyed by the presence of radially inflowing jets weakens the general relevance of these measurements. Other studies have chosen to reverse the above roles, namely to neglect swirl and place all emphasis on the behaviour of rows of jets in a confined cross-flow (Khan et al. 1981); relevance here is clearly restricted to combustor dilution zones. Recently attempts have been made to provide measurements in flows which contain both swirl and normally discharged jets. So et al. (1985) and Ahmed and So (1987) have presented some useful data, but have unfortunately chosen to restrict attention to a single jet, which severely limits the practical relevance of their data. Their investigations did show however that jet mixing and penetration are significantly affected by the swirling motion. This implies that a strong interaction exists between swirler fluid and jet fluid and test data for model validation should contain both features. Only then

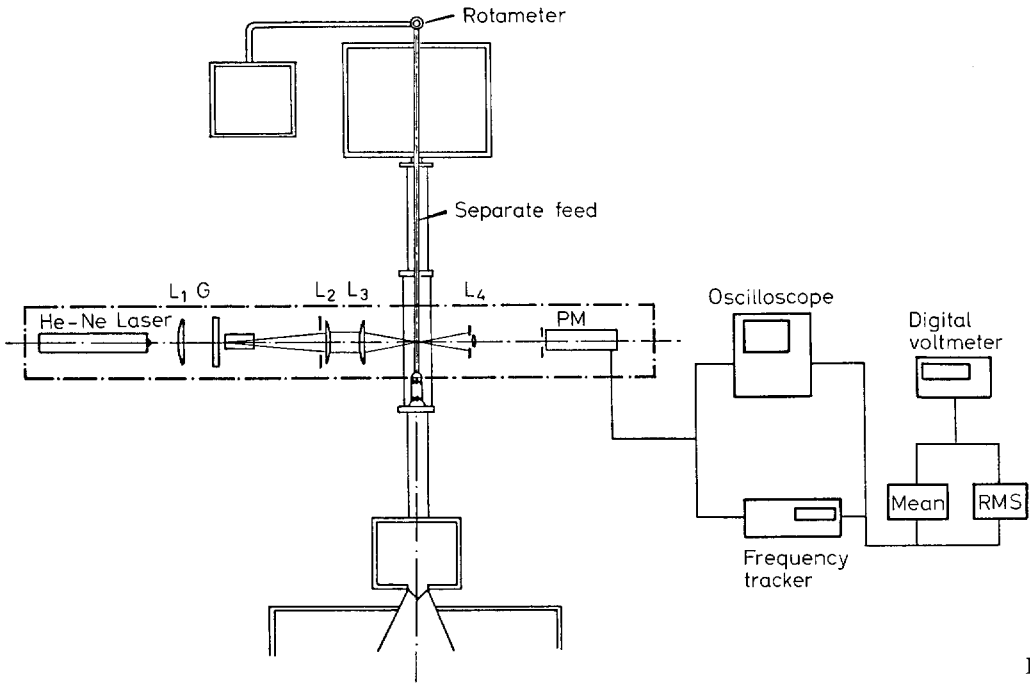


**Fig. 1.** Experimental arrangement

can the ability of the model to represent the feedback mechanisms between swirler, primary jet and dilution jet flows in a real combustor be properly tested. Detailed measurements which go some way to achieving this have been obtained by Jones and Toral (1983). The combustor was a realistic can-type geometry comprising a swirler, primary and dilution jets and an exit nozzle but only the temperature and gas composition fields were obtained. Some velocity information is available (Bicen and Jones 1986) but optical access problems restricted this to the immediate vicinity of the jet holes; important information on the internal flow structure is therefore missing.

The present investigation aims to provide a complete set of velocity information for a realistic combustor geometry containing both swirl and jet flow features. The model used is geometrically identical to that used in the experiments of Jones and Toral (1983) and Bicen and Jones (1986) with the only omission being the wall cooling arrangements. It is an unfortunate consequence of the desire to provide a comprehensive mapping of the internal volume that this can only be easily achieved under isothermal flow conditions using a perspex model. Water flow models are still used by industry during the empirical design process, and computational models also imply that the flow patterns can be similar in reacting and isothermal flow (Coupland and Priddin 1986). Nevertheless, the use of isothermal flow presents a need to ensure that the flow structure is similar to that expected in a burning combustor before detailed measurements are undertaken. Neither does the restriction to isothermal flow preclude the use of the data for computer model validation, since both numerical and turbulence modelling aspects will be severely tested by the complex flow under study here. The present data provide a suitable benchmark test case which any mathematical model should be capable of predicting adequately if it is to be considered for use as a design tool. In addition to providing the detailed information under one set of flow conditions, the current work also quantifies the changes brought about by modifying the swirler geometry, and demonstrates how the detailed measurements may be used to evaluate global design parameters of use to combustor designers such as the primary jet recirculation ratio.

## 2 Flow configuration

The experimental facility and a sketch of the model combustor geometry used are presented in Figs. 1 and 2 respectively. The main geometrical characteristics of the model combustor were intended to be similar to those found in can-type combustors [e.g. as in the Rolls-Royce Spey engine (Gradon and Miller 1968) and its later derivatives (Bhangu et al. 1983)]. The model was manufactured from perspex and consisted of a hemispherical "head" section attached to a cylindrical central barrel of 74 mm internal diameter which terminates in a circular to rectangular contraction nozzle.

The combustor was located concentrically in a larger diameter tube so that an evenly spaced surrounding annular passage was formed. The curved vane aerodynamic swirlers typical of production chambers (Bhangu et al. 1983) were attached to the head with their central hub blocked off (Fig. 3). No attempt was made to simulate any fuel injector flow, but this possesses such small momentum compared to other inflows that it has a negligible influence on setting the flow pattern. The swirl number (based on the usual defini-

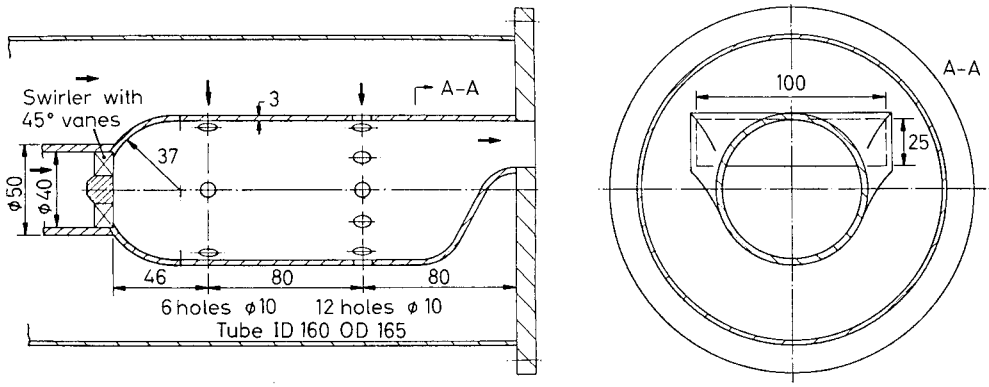


**Fig. 2.** Model combustor geometry

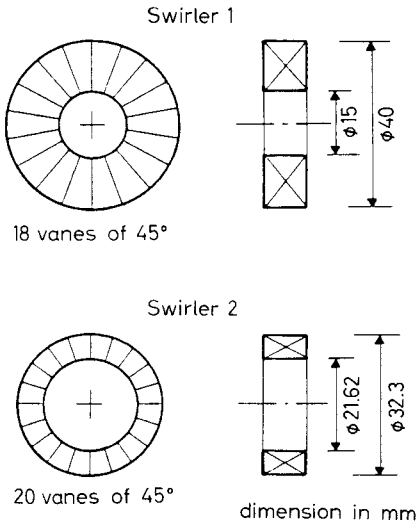


**Fig. 3.** Geometry of the two swirlers used in the investigation

tion and using the outer radius as the non-dimensionalising length) was 0.74 for swirler 1 while that of swirler 2 was 0.85. Primary holes (six in number) of 10 mm diameter equispaced around the combustor were located 46 mm downstream of the swirler. A second row of 12 equispaced 10 mm diameter holes (dilution holes) was arranged a further 80 mm downstream. Two constant head tanks supplied water to drive the combustor flow. The first provided a separate feed to the swirler only; the second was connected to the larger containing tube to provide an annular feed to both hole rows, this external annulus was blocked off by the retaining flange at the furthest downstream end. A large annulus height was chosen to ensure essentially plenum fed jets in both rows. The outflow from the combustor entered (via a free overflow) a large sump tank from where it was recycled to the two constant head tanks. For the present study the total mass flow through the combustor $\dot{m}_{\text{total}}$ corresponded to 3.27 kg/s, 15% of this flowed through the swirler and the remainder was split 33% and 52% through primary and dilution holes respectively. The swirler flow was metered with a rotameter while the flows through the ports were determined by integrating LDA measured axial velocity profiles in the annulus. The above division of the available head gave rise to a Reynolds number of $5.6 \times 10^4$ based on the bulk mean velocity inside the combustor ($U_b = 4 \times \dot{m}_{\text{tot}}/(\pi \times D_c^2) = 0.76$ m/s) and the internal combustor diameter ($D_c = 74$ mm).

In order to provide information on inlet conditions in as much detail as possible, profiles of the three normal stresses were obtained immediately upstream of the swirler inside the separate feed, an average value for the turbulence kinetic energy deduced from these measurements at this position was $7 \times 10^{-4}$ m$^2$/s$^2$ for swirler 1 and $9.5 \times 10^{-4}$ for swirler 2. Similarly, the measured values of the axial and azimuthal normal stresses were also used to determine the turbulence kinetic energy at the jet entry planes. Interference of the laser beams with the hole edges did not allow the V component to be measured accurately at this position, so the assumption was made of equality between radial and azimuthal normal stresses. The resulting turbulence energy values were $9.5 \times 10^{-4}$ m$^2$/s$^2$ for the primary holes and $1.33 \times 10^{-3}$ m$^2$/s$^2$ for the dilution holes.

## 3 Measurement techniques

Flow visualisation offered the best means of demonstrating quickly the suitability of the internal flow patterns obtained with the above flow split for simulating combustor flows. In the present work hydrogen bubbles provided the most suitable flow visualisation pictures (polystyrene beads were also tried but rejected due to their tendency to scratch the perspex walls). Note that the flow visualisation was not used to extract any details of the flow as this is impossible in the complex highly turbulent regions of combustor flow. The pictures were only used to confirm adequate jet penetration and primary recirculation patterns. The bubbles were produced from 1 mm stainless steel wires inserted through tappings in the larger containing tube and entering the combustor through the jet ports. A vertical sheet of light 2 mm thick was produced using a specially designed light source; photographs of the bubble streaklines were taken, typically

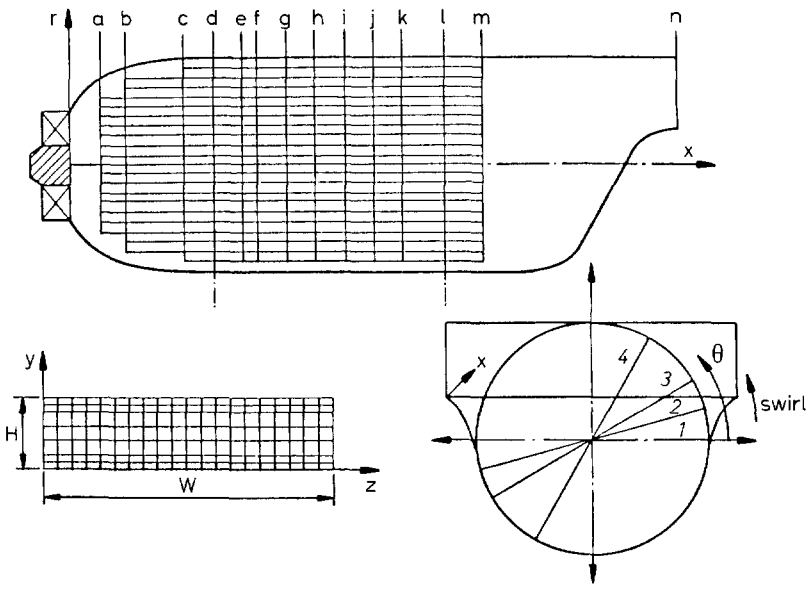


**Fig. 4.** Co-ordinate system and network of measurement points:
$\theta$ plane: *1* 0°, *2* 15°, *3* 30°, *4* 60°

| | $x/D_c$ | | $x/D_c$ |
|---|---|---|---|
| a | 0.135 (0.135) | h | 1.094 (1.135) |
| b | 0.270 (0.270) | i | 1.229 (1.270) |
| c | 0.486 (0.527) | j | 1.364 (1.405) |
| d | 0.621 (0.662) | k | 1.500 (1.540) |
| e | 0.756 (0.797) | l | 1.702 (1.743) |
| f | 0.824 (0.864) | m | 1.870 (1.910) |
| g | 0.959 (0.999) | | |

axial locations in parentheses are for operation with swirler 2

**Table 1.** Characteristics of the optical arrangement

| | | |
|---|---|---|
| 5 mW He-Ne laser | | $\lambda = 632.8$ nm |
| Focal length of lenses (mm) | $L_1$ | $f_1 = 110$ nominal |
| | $L_2$ | $f_2 = 300$ nominal |
| | $L_3$ | $f_3 = 300$ nominal |
| Beam diameter of $1/e^2$ intensity (mm) | | 0.8 |
| Half-angle of intersection, in air (°) | | 5.98 |
| Fringe separation (μm) | | 3.037 |
| Intersection volume diameter at $1/e^2$ intensity (mm) (in water) | | 0.111 |
| Intersection volume length at $1/e^2$ intensity (mm) (in water) | | 1.416 |
| Calculated number of fringes within $1/e^2$ intensity band with no frequency shift | | 37 |
| Velocimeter transfer constant (MHz/ms$^{-1}$) with no frequency shift | | 0.329 |

with shutter speeds ranging from 1/10 to 1/4 s, the very light sensitive film rated at ASA 400 was then overdeveloped. Radial planes at $\theta = 0°$ and 30° (see Fig. 4 for origin of the $\theta$ co-ordinate) were studied in detail; the whole combustor geometry being rotated using the rear retaining flange to bring the relevant $\theta$ plane into the visualisation plane (i.e. the vertical position).

Detailed measurements of the three mean velocity components and the corresponding turbulent normal stresses were obtained with a laser-Doppler anemometer operating in the dual beam forward scatter mode. The outer containing tube in the vicinity of the model combustor was immersed in a plane-walled trough filled with distilled water to minimise the effects of the different refractive indices between air, perspex and water on the beam passage through the curved tube wall. The optical arrangement is shown in Fig. 1 and comprised a 5 mW He-Ne laser, a focussing lens, a rotating diffraction grating G (to split the incident beam and provide frequency shifts up to 2 MHz), a light collecting system and a photomultiplier (RCA 4836). Table 1 summarises the principle characteristics of the system.

The Doppler signals were demodulated by a frequency tracker (Cambridge Consultants CCO1) and the analogue output was processed through a true time integrator and an RMS meter. The use of suitable frequency shifts helped to obviate limitations imposed by the tracking range and the slew rate restrictions of the tracker. A detailed analysis of instrumentation of this type has been provided, e.g. by Durst et al. (1981). Measurements of the mean axial, azimuthal and radial velocities and their normal stresses were obtained at the 0°, 15° and 30° azimuthal planes. The measurements were obtained at a total of 13 axial locations spanning the positions where beam interference was experienced either due to the swirler and curved head upstream or to the nozzle geometry downstream. The network of measurement points and the system of co-ordinates used in presenting the results are shown in Fig. 4.

Errors associated with the measurement of the mean velocity and RMS fluctuation levels include the influence of mean velocity gradients across the measuring volume, finite transit time broadening, instrument noise and short term fluctuations in the rotation of the grating. In addition, the error due to the offset in the calibration curve of the tracker output contributed to the error for the mean velocity (Koutmos 1985). Errors in the mean velocities are estimated to be 4% of the bulk velocity with maximum values in regions of high velocity gradients. Errors in the measurement of the RMS level are estimated to be about 6%. The random error associated with the instability of the grating speed is estimated to be only 0.3% of the measured velocity values.

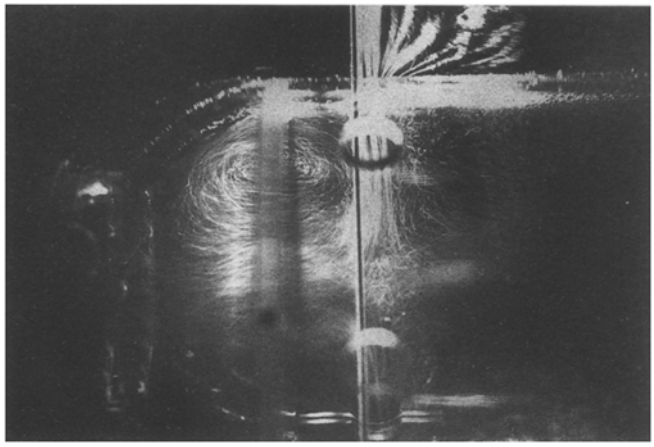

a

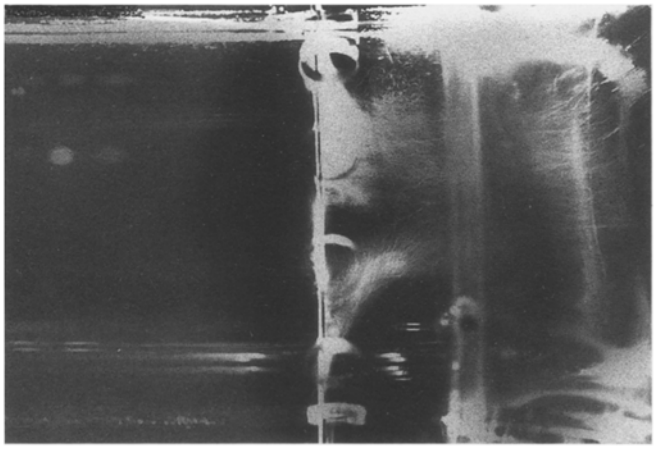

b

**Fig. 5a and b.** Hydrogen bubble flow visualisation; **a** primary jet entry and upstream recirculation (swirler 1), **b** dilution jet entry (swirler 1)

## 4 Discussion and results

Flow visualisation studies were conducted for a variety of flow splits between swirler and jets prior to the current measurements (Koutmos 1985). For the present case, where the swirler mass flow rate was 15% of the total, a stable and symmetric toroidal vortex was identified upstream of the axis of the primary ports with the primary jet trajectory close to 90° (Fig. 5a). Although the dilution jet trajectory was less steep, penetration was sufficient to create a small but weak recirculation on the can centre line as depicted by the few hydrogen bubbles found upstream of the wire (Fig. 5b). These two pictures provide a reassuring demonstration that the flow in the current model is exactly that expected to occur in a well-designed combustor.

Axial velocity and turbulence intensity data were also taken throughout the annular gap surrounding the combustor. These have been reported in Koutmos et al. (1984), emphasis here is placed on the internal combustor measurements. Figures 6–8 present radial profiles of the three mean velocities and the corresponding turbulence intensities at the three azimuthal planes (0°, 15°, 30°) obtained under operation with swirler 1. The radial co-ordinate is non-dimensionalised using the inside diameter of the larger containing tube D (160 mm). The velocity used for non-dimensionalisation is the bulk velocity $U_b$ defined earlier. A scale for normalised velocities and turbulence levels is given in each Figure. Setting aside the nozzle region, the geometry of the present can gives rise to an expected cyclically repeating behaviour every 60°. $\theta = 0°$ corresponds to a plane containing both primary and dilution jets, whereas $\theta = 30°$ contains only dilution jets. Strictly speaking, measurements should have been taken on both $\theta = 15°$ and 45° since these will not be identical. It was deemed sufficient to restrict attention to only 3 $\theta$ planes as this characterises the strength of the three-dimensionality sufficiently. Measurements were taken across a complete combustor diameter, to check the accuracy of cyclical repeatability. In Figs. 6–8 a positive radius corresponds to the right half of the combustor (looking downstream), a negative radius implies the left half; upwards $W$ velocities are plotted as positive and downwards $W$ velocities as negative to clarify the swirl profile shape.

Dealing first with the mean axial velocity distributions (Figs. 6a, 7a and 8a), profiles within the primary zone (stations a, b, c) indicate the strength and axisymmetric nature of the toroidal vortex visualised in Fig. 5a. Even at station c which is within one jet diameter of the primary port, closely axisymmetric behaviour may be seen with the only slight deviations being the higher velocities on the 30° plane in the near wall regions. The primary jet entry plane, d, gives the first indication of three-dimensional behaviour; profile shapes are quite similar on the 15° and 30° planes, but very different on 0°, with low U velocities near the hole entry; this indicates the 90° jet entry angle as observed above. Further evidence for this lies in the negative velocities found on the can centre-line at this plane, characterising the contribution the primary jet fluid makes to the upstream vortex. Positive axial velocities are found on the centre-line at stations f–k throughout the intermediate zone. The magnitudes of maximum backwards and forwards velocities are observed to be about 2.4 and 2.0 times $U_b$ respectively, indicating that perhaps slightly more than half the primary jet fluid passes upstream. An attempt will be made later to quantify this feature since it is crucially important to combustor designers. Axisymmetric behaviour returns very rapidly after jet entry. Only at plane f are small but clear differences seen between $\theta$ planes. These differences are however important since they take the form of a small recirculation region at station f on the 0° plane. The absence of this on other planes shows the three-dimensional nature of this separation region which exists on the lee side of the jets. Radial and azimuthal transfer of momentum compensates rapidly for this velocity deficit and smooths out the profile shape so that a much flatter profile is obtained at station k just 1.5 jet diameters upstream of dilution jet entry. The

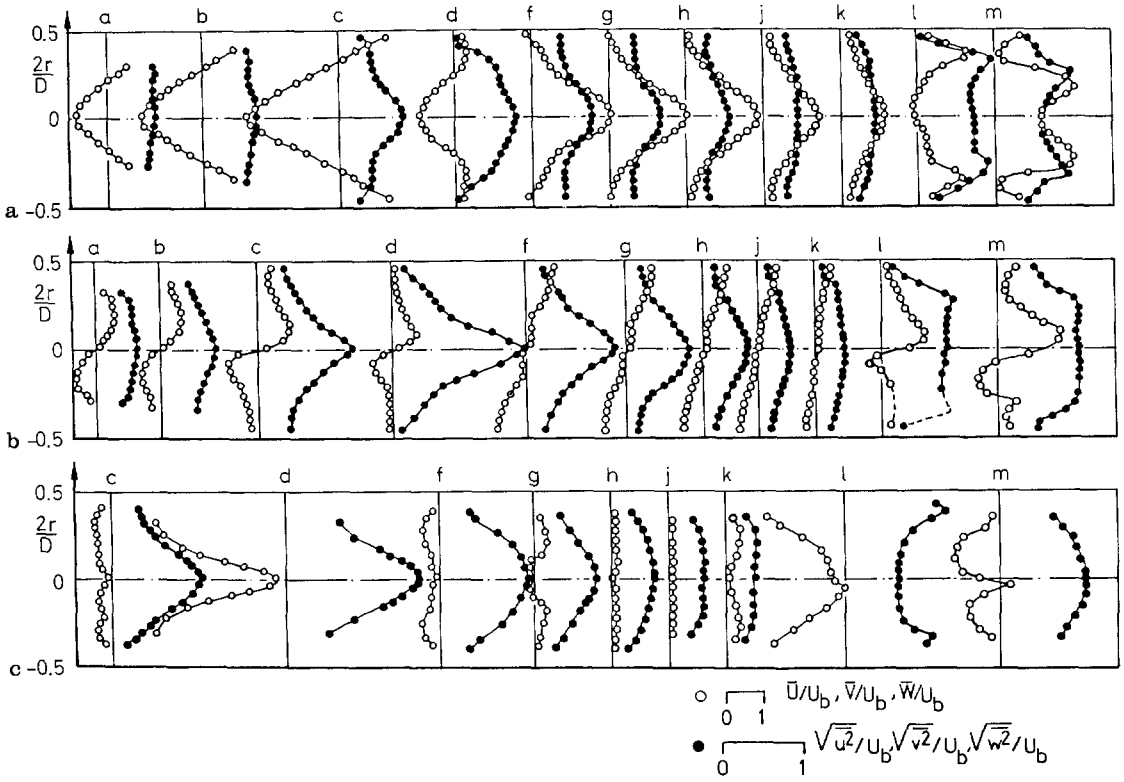


**Fig. 6a–c.** Velocity and turbulence field (swirler 1, $\theta = 0°$); **a** axial, **b** azimuthal, **c** radial

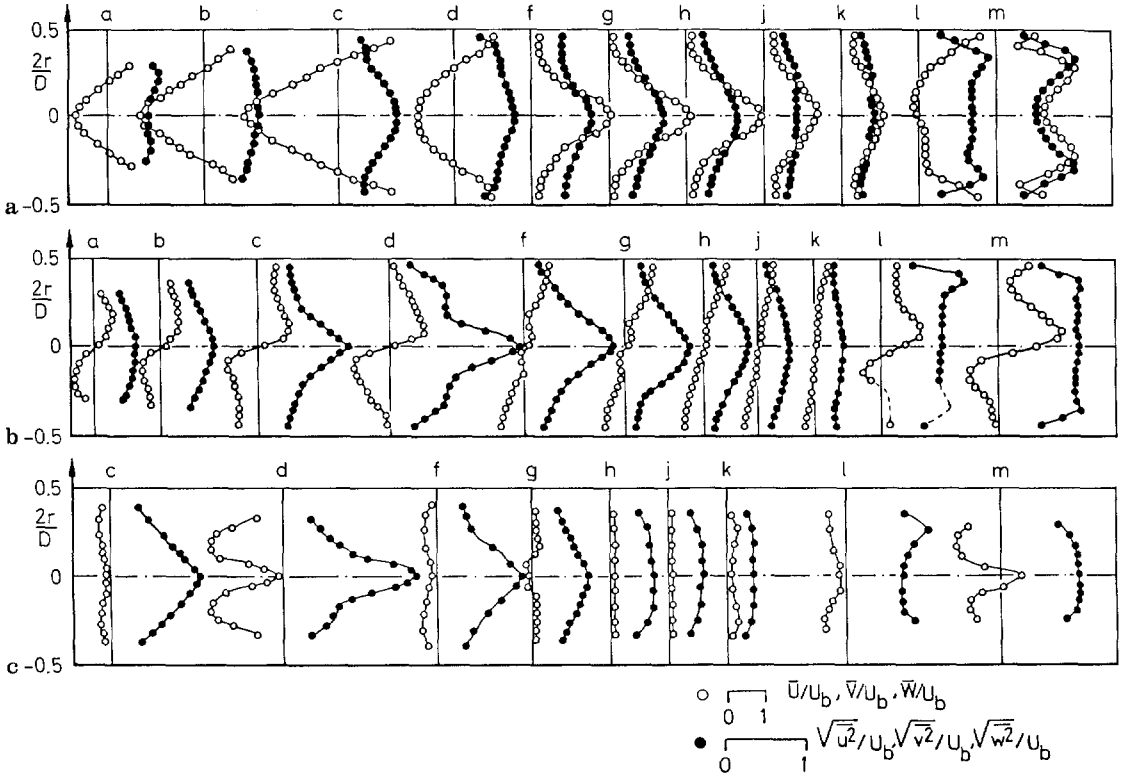


**Fig. 7a–c.** Velocity and turbulence field (swirler 1, $\theta = 15°$); **a** axial, **b** azimuthal, **c** radial

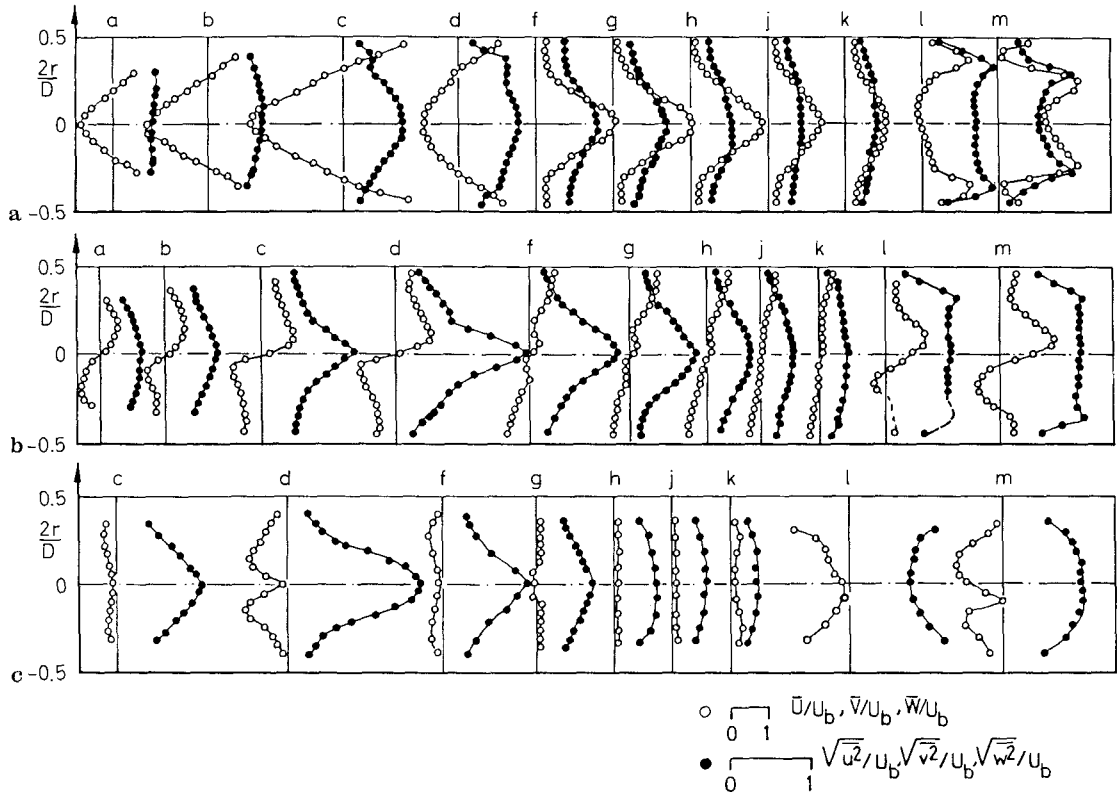


**Fig. 8a – c.** Velocity and turbulence field (swirler 1, $\theta = 30°$); **a** axial, **b** azimuthal, **c** radial

localised negative velocity regions and the slow axial development of the flow near the combustor wall are important in determining the location of wall cooling arrangements and minor adjustments such as trimmer holes. They seem to correlate well with the location of hot spots identified in experimental production chambers of similar geometry (Bhangu et al. 1983).

The rapid mixing and re-distribution of momentum which takes place in the intermediate zone may be quantified by observing that the centre-line axial velocity has been reduced by 100% between stations g and k, which is less than 20% of the total combustor length. In the dilution zone, stations l and m, evidence of much weaker penetration is found; the very small negative velocity region on the centre-line implies that only the upstream edges of the jet are able to impinge on each other. The double *S* shape of the axial velocity profile at station m is typical of that measured in several rows of jets in cross-flow experiments (e.g. Khan et al. 1981). Shallower penetration compared to the primary jets is not unexpected if the momentum flow rate ratios of the two jet systems are considered (total radial momentum flow/total axial momentum flow). For the primary jets a ratio of 11 is found and strong jet impingement is to be expected. The corresponding value for the dilution jets has reduced to 5 and greater downstream bending is bound to occur.

Swirl velocities (Figs. 6b, 7b and 8b) within the toroidal vortex (stations a, b) are low compared to those downstream. The maximum $W$ location changes position from the middle of the can radius at station b progressively moving towards the axis at station c and d as the inflowing jets entrain some swirling fluid and carry this inwards. The blockage effect caused by jet merging forces the majority of the swirling fluid to exit from the primary zone at planes other than those containing jets. This results in different swirl distributions at station d between the 0°, 15° and 30° planes; the former has very low swirl velocities at the combustor walls, whereas in the latter two, which form the exit route from the primary zone, progressively larger $W$ is measured. As this fluid passes downstream it is entrained into the low pressure regions behind the jets leading to the forced vortex swirl profile as seen at plane f. A similar type of swirl velocity profile has been measured by Altgeld et al. (1983) in their investigation of an axisymmetric swirl stabilised model combustor. The profile shape subsequently remains close to solid body rotation throughout the intermediate zone with almost linearly decaying levels of maximum swirl until the entry of the dilution jets. The larger number of dilution jets increases the blockage factor so that swirling fluid is forced towards the centre line (station l and m). Another reason for the increase of the $W$ component near the centre line is the slight non-cyclic behaviour of the flow in the dilution region

due to the upstream effect of the nozzle. Since the mode of measurement of the $W$ component is to traverse along a horizontal diameter of the combustor it is expected that if this plane does not coincide with the plane on which $\partial V/\partial r$ is zero then an artificially large $W$ component may be measured. Evidence of non-cyclic behaviour is seen in the presence of non-zero swirl velocities on the combustor centre-line at stations l and m.

Radial velocity profiles are presented in Figs. 6c, 7c and 8c. No measurements were possible at station b due to strong beam refraction caused by the double head curvature. The importance of the primary jets in locating the downstream end of the primary vortex is evident from the strong inward velocities, on average twice the bulk axial velocity, over most of the diameter at station d ($\theta = 0°$). The profiles on the 15° and 30° planes show the jet merging in the centre-line vicinity but small $V$ velocities in the near-wall regions again pinpointing the exit route from the primary zone. Fluid with high radial momentum disappears remarkably quickly, presumably due to high pressure forces, and the profiles at all stations from f to k show very small $V$ velocities, and little differences between $\theta$ planes. Once the dilution jets are reached (station l) the linear $V$ distribution reappears, this time on both 0° and 30° planes. Both absolute magnitudes (typically 1.0 $U_b$) and rates of disappearance (see station m) are smaller than for the primary jets which is entirely consistent with the shallower entry angles seen in the flow visualisation pictures (Fig. 5b).

Levels of turbulence generated throughout the combustor are important since they affect the entrainment rates in the primary zone and the penetration and mixing rates of the primary and dilution jets. Under combusting conditions they influence the stability limits, combustion efficiency and ignition performance (Lefebvre 1983). Practically flat distributions of the turbulence intensities are found within the primary zone (stations a, b), while at stations c, d, f large radial and axial velocity gradients and the impingement of opposing jets gives rise to centre line maxima in all three components. The turbulence quantities indicate smaller deviations from axi-symmetry compared to the mean values (see station f). The maximum value of the RMS of the swirl component was measured on the centre line at station d and was twice that of the axial turbulence intensity, indicating the strong anisotropy of the turbulence in this region. The radial turbulence intensities exhibit similar behaviour to the azimuthal values with similar centre line levels and rates of decay. The strong influence of impingement in determining these distributions is underlined by the fact that it is only at station l (where weak impingement is known to occur) that off centre-line maxima in turbulence intensities are observed. Clearly shear generation is the dominant mechanism when impingement is not present. Turbulence kinetic energy contours obtained from the three normal stresses are shown in Fig. 9. This is merely an alternative view of the measurements already discussed, but does identify clearly the highly turbulent parts of the flow as regions of strong impingement

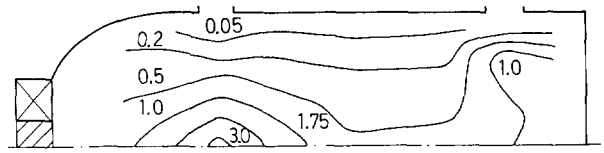


**Fig. 9.** Turbulence kinetic energy contours ($k/U_b^2$, swirler 1, $\theta = 0°$)

(primary zone) or strong interaction between jets and cross-flow with downstream, weaker impingement (dilution zone).

The performance of the second swirler will now be examined under operating conditions similar to those of swirler 1. The variations in the flow distributions obtained with the two swirlers arise mainly from the following differences. (1) The larger number of vanes employed in swirler 2; (2) The geometry of swirler 2 corresponds to a ratio of $D_{\text{outer}}/D_{\text{hub}} = 1.5$ while that of swirler 1 corresponds to $D_{\text{outer}}/D_{hub} = 2.6$; as a consequence swirler 2 has a reduced outlet area (by about 57%) and correspondingly its average axial and swirl velocities increase by a factor of 2. (3) The swirl number of swirler 2 is 0.85 while that of swirler 1 is 0.74. The influence of this change in swirler geometry on the flow patterns is depicted in Fig. 10 which combines the axial velocity and turbulence kinetic energy profiles in the primary (stations c, d) and dilution (stations l, m) zones for each of the swirlers ($\theta = 0°$ plane only). As a result of the higher axial momentum imparted to the swirler flow, swirler 2 reduces the magnitude of the maximum negative axial velocity by about 50% (station c) and, in spite of the increase in swirl number, its location is also shifted away from the centre line [similar behaviour has been observed by Kilik (1976)]. This denotes a reduction in the primary jet trajectory and penetration. In accord with the weaker impingement, levels of turbulence in the primary zone are also reduced (Fig. 10, stations c and d) by about the same amount. Such variations in the aerodynamics of the primary zone as a result of changes in swirler geometry have also been observed in experimental production chambers (Bhangu 1983). Rapid mixing in the intermediate zone means that the flow quickly forgets its different origins and flow and turbulence distributions at stations l and m show little difference, although reduced dilution jet penetration is also evident in Fig. 10.

It has been mentioned above that a quantitative estimate of how much primary jet fluid contributes to the primary vortex is an important design criterion. An attempt has been made to interpret the present measurements in this light. The primary zone recirculation ratio was here estimated by integration of the negative part of the axial velocity profile over the whole cyclic sector at station c (chosen as the station nearest to the centre of the recirculation). This quantity was obtained for each of the swirlers operating with various swirler flow rates [whilst keeping primary and dilution hole flow rates constant (Koutmos 1985)] and has been plotted against the ratio of swirler to primary jet mass flow rate in

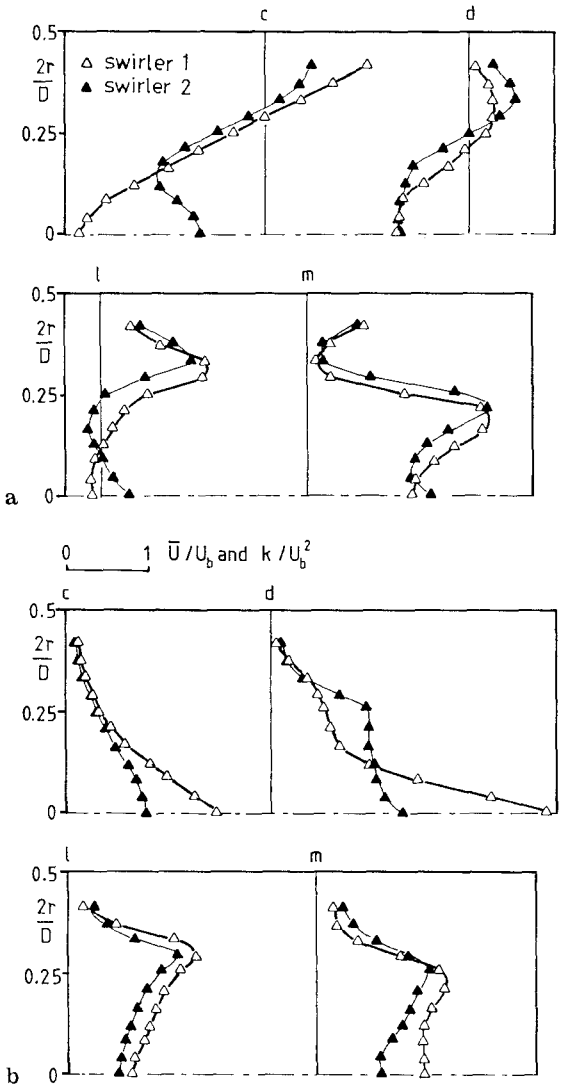


**Fig. 10 a and b.** Influence of swirler geometry on **a** axial velocity field, and **b** turbulence kinetic energy field (swirler 1, $\theta = 0°$)

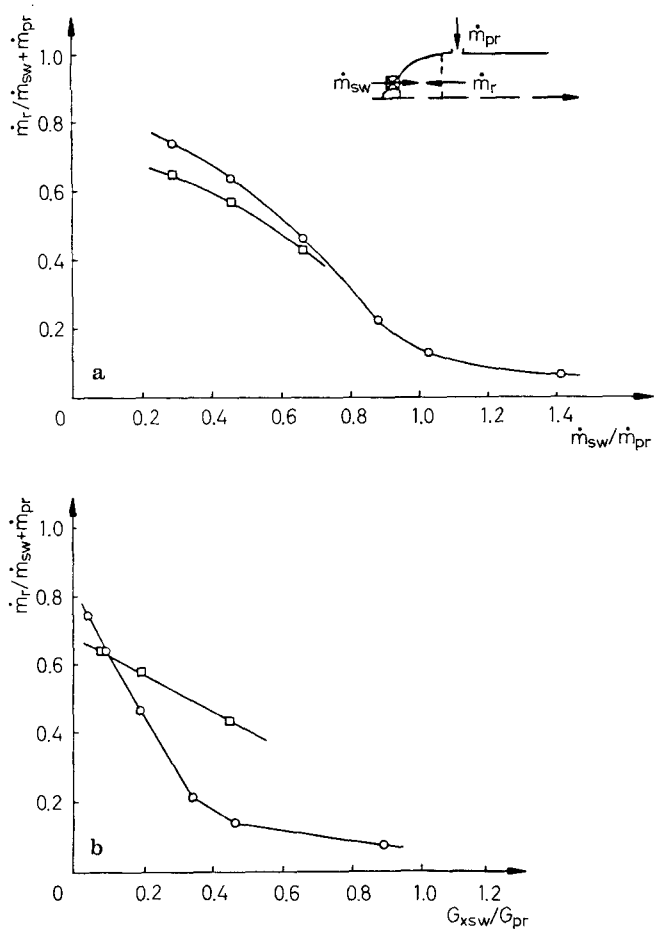


**Fig. 11 a and b.** Primary zone recirculation ratio and comparison of the performance between ○ swirler 1 and □ swirler 2 ($G_{xsw}$ is the axial momentum through the swirler and $G_{pr}$ is the radial momentum through the primary holes)

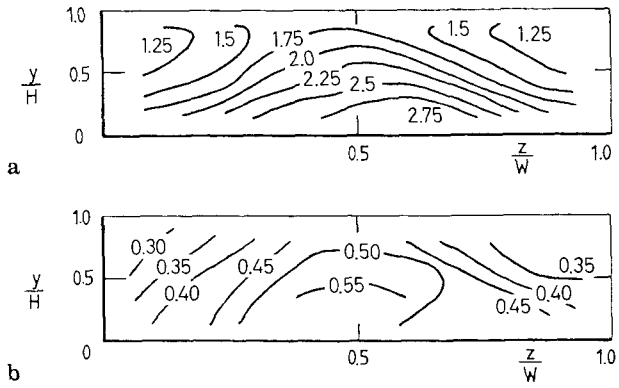


**Fig. 12.** **a** Axial velocity field ($U/U_b$), **b** axial turbulence intensity field ($\sqrt{\overline{u^2}}/U_b$) at exit from the nozzle contraction (swirler 1)

Fig. 11 a. The graph depicts a decreasing percentage of primary fluid to participate in the vortex as $\dot{m}_{sw}/\dot{m}_{pr}$ increases. The fall off is quite rapid at first, but slows up at high values of $\dot{m}_{sw}/\dot{m}_{pr}$. Differences between the two swirlers are rather small. The same quantity plotted against the ratio of swirler to primary jet momentum produces the trend shown in Fig. 11 b. The use of momentum flow rate has two effects, firstly to produce an almost linear trend in the region where vortex strength is decreasing rapidly, and secondly to separate the performance of the two swirlers much more. In the absence of primary jets, the second swirler must perform better than the first as a result of its improved entrainment ability, due to higher swirl number. The cross-over observed in Fig. 11 b serves to illustrate the competing effects. Swirler 2 has an eventual superior performance, but achieves this by introducing high axial velocities which force the primary jets downstream and this reduces their contribution to the recirculating flow. In design terms assessing performance in the manner shown in Fig. 11 b seems more informative.

Exit conditions from the combustor are also of interest in engineering terms since they affect the performance of downstream components such as nozzle guide vanes and turbine blades. The normalised exit axial velocity and turbulence intensity fields are shown in Fig. 12a and b respectively. Non-uniformities spanning a factor of 2 remain in the exit axial velocity field; these mainly arise due to low velocities near the upper corners of the exit cross section and high velocities occurring near the lower surface of the nozzle (Fig. 12a). The former are related to the velocity deficit near the wall at station m (Fig. 6a) and the locally expanding cross-section of the nozzle while the latter are caused by the cross-stream elevation of the geometry. Comparison of the quantity $((U_{max}-U_{min})/U_b)$ between station m and the exit can give an estimate of the effectiveness of the nozzle in suppressing velocity non-uniformities; this had a value of 2 at station m (Fig. 6a) while at the exit its value was reduced to 1.5. Turbulence intensities at the exit (Fig. 12b) are also important; damping of these fluctuations is achieved by promoting intense mixing in the dilution zone. Comparison of the maximum value of the axial turbulence intensity between the exit and station m indicates that turbulence intensity levels at the outlet have been reduced by about 45%.

## 5 Summary

(1) The velocity and turbulence fields inside a model combustor geometry typical of current can-type systems and operated under isothermal conditions have been presented in detail. Information about the interaction between swirler, primary, dilution and exit flows has been provided and interpreted in the form of jet penetration angles and identification of regions of recirculation, intense turbulence generation and rapid mixing.

(2) The influence of swirler geometry has also been investigated. A change in swirler geometry comprising a decrease in swirler exit area and an increase in swirl number resulted in a reduction in the strength of the primary zone recirculation and the levels of turbulence inside the primary zone due to weaker impingement of the primary jets. The variations were found less pronounced in the dilution zone.

(3) Efficient and rapid mixing throughout the intermediate and dilution zones reduced non-uniformities at the exit from the combustor. Maximum turbulence intensities at this position were of the order of 0.5 $U_b$ representing a reduction of 50% over those emerging from the dilution region.

(4) Since the measurements were obtained inside a realistic configuration and display flow patterns which are representative of gas turbine practice they are also representative of the aerodynamic behaviour of practical combustion chambers. The identification of the flow regions with high turbulence generation and anisotropy, pronounced three-dimensionalities or established cyclic behaviour should provide useful information for numerical modelling exercises. These features help with respect to the choice of turbulence models, the use of zonal approaches to cover the entire complex geometry and the requirements for local grid node refinement. Information has also been provided to assist in the establishment of inflow boundary conditions in these calculations. These comprehensive data are then most suitable for the testing of numerical calculation schemes. The ability to predict this isothermal flow accurately would represent a significant step forward in the appraisal of combustor prediction procedures.

**Acknowledgements**

The work reported here has been supported by the Ministry of Defence via RAE (Pyestock). The authors would like to acknowledge their gratitude for this support and the many useful discussions with staff and colleagues at RAE (Pyestock), Rolls-Royce plc. and Imperial College.

## References

Ahmed, S. A.; So, R. M. C. 1987: Characteristics of air jets discharging normally into a swirling cross-flow. AIAA J 25, 429–435

Altgeld, H.; Jones, W. P.; Wilhelmi, J. 1983: Velocity measurements in a confined swirl driven recirculating flow. Exp. Fluids 1, 73–78

Bhangu, J. K.; Snape, D. M.; Eardley, B. R. 1983: The design and development of a low emissions transply combustor for the civil Spey engine. AGARD CP 353

Bicen, A. F.; Jones, W. P. 1986: Velocity characteristics of isothermal and combusting flows in a model can-type combustor. Combust. Sci. Technol. 49, 1–15

Bruce, T. W.; Mongia, H. C.; Reynolds, R. S. 1979: Combustor design criteria validation. USARTL-TR-78-55, 1–3

Coupland, J.; Priddin, C. H. 1986: Modelling the flow and combustion in a production gas turbine combustor. In: Turbulent shear flows 5 (ed. Durst, F.; Launder, B. E.; Lumley, J. L.; Schmidt, F. W.; Whitelaw, J. H.), pp. 310–323. Berlin, Heidelberg, New York: Springer

Durst, F.; Melling, A.; Whitelaw, J. H. 1981: Principles and practice of laser Doppler anemometry. New York: Academic Press

Gradon, K.; Miller, S. C. 1968: Combustion development on the Rolls-Royce Spey engine. In: Combustion in advanced gas turbine systems (Cranfield Int. Symp. Ser. Vol. 10) (ed. Smith, J. E.). New York: Pergamon Press

Jones, W. P.; Toral, H. 1983: Temperature and composition measurements in a research gas turbine combustion chamber. Combust. Sci. Technol. 31, 249–275

Khan, Z. A.; McGuirk, J. J.; Whitelaw, J. H. 1981: A row of jets in a cross-flow. AGARD CP 308

Kilik, E. 1976: The influence of swirler design parameters on the aerodynamics of the downstream recirculation region. PhD thesis, School of Mechanical Engineering, Cranfield Institute of Technology, UK

Koutmos, P. 1985: An isothermal study of gas turbine combustor flows. PhD thesis, University of London, UK

Koutmos, P.; McGuirk, J. J.; Vafidis, C. 1984: Internal flow-field measurements in a model can-type gas-turbine combustion chamber. In: Laser anemometry in fluid mechanics (ed. Adrian, R. J.; Durão, D. F. G.; Durst, F.; Mishina, H.; Whitelaw, J. H.), pp. 305–317. Lisboa/Portugal: Ladoan

La Rue, J. C.; Samuelsen, G. S.; Seiler, E. T. 1984: Momentum and heat flux in a swirl stabilised combustor. Proc. 20th Int. Symp. Combust., The Combustion Institute
Lefebvre, A. H. 1983: Gas turbine combustion. Washington/DC: Hemisphere
Rhode, D. L.; Lilley, D. G.; McLaughlin, D. K. 1983: Mean flow fields in axisymmetric combustor geometries with swirl. AIAA J. 21, 593–600
So, R. M. C.; Ahmed, S. A.; Mongia, H. C. 1985: Jet characteristics in confined swirling flows. Exp. Fluids 3, 221–230
Sturgess, G. J.; Syed, S. A. 1980: Validation studies of turbulence and combustion models for aircraft gas turbine combustors. In: Proc. Symp. Momentum and Heat Transfer Processes in Recirculating Flows (ed. Launder, B. E.; Humphrey, J. A. C.), pp. 71–89. ASME Winter Annu. Meet. Chicago/IL, November
Vu, B. T.; Gouldin, F. C. 1982: Flow measurements in a model swirl combustor. AIAA J. 20, 642–651

Received July 29, 1988

# Technical notes

## A two-spark schlieren system for very-high velocity measurement

**D. Papamoschou**

Graduate Aeronautical Laboratories, California Institute of Technology, Pasadena, CA 91125, USA

### 1 Introduction

To produce movies of supersonic flows, from which meaningful information can be extracted, is a non-trivial task. In a supersonic wind tunnel, speeds are of the order of 1,000 m/s and the scale of turbulent structures is typically of the order of millimeter. To capture the flow details, exposure times of less than 0.1 μs, and framing rates from 1 to 100 μs are desirable. While high-speed movie cameras with framing rates up to 5 million per second are commercially available, they are expensive, require an extremely-powerful light source, and are inflexible as to adjusting the exposure and the framing rate independently.

A simple and relatively inexpensive optical method to record the evolution of very rapid events in high-speed flows is described in this paper. It is a two-spark variant of the schlieren system. For each shot, two distinct frames are produced on the same piece of film, each of very short (20 ns) exposure. The timing between the two frames is adjustable and can range anywhere upwards of 1 μs. The system requires very few additions to an existing schlieren setup and contains no moving parts. It has been successfully applied to a supersonic shear-layer experiment where velocities of turbulent-flow structures were accurately determined.

### 2 Description

The working principle of the system is illustrated on Fig. 1. Two slightly-out-of-axis light beams are produced by two different spark gaps, each with 20 ns spark duration (Xenon Corp., Model 787B). The relative angle of the two beams is exaggerated on the drawing: in reality, it is only 0.5°. Near their sources, the two beams are brought close together by means of a beam splitter, which acts as a beam combiner. This was necessary because the physical size of the spark gaps did not allow a separation between electrodes smaller than 5 cm, while a 1-cm separation was desirable. Thus, 50% of the light is directed toward the optical system and the other 50% is focused on a photodiode connected to a digital oscilloscope (Hewlett-Packard Model 54200A). A flat mirror directs the two beams to a concave mirror that turns them into parallel beams. After passing through the test section, the two beams are focused by a second concave mirror. Both concave mirrors have 100-cm focal length. At about 80 cm downstream of the second concave mirror, after the two beams no more overlap but before the focal point, a split mirror is placed that steers each beam in a different direction. The split mirror is actually made of two front-surface flat mirrors that can rotate around each other's outer edges. Their relative angle is set such that the source images of the two beams coincide. The knife edge is inserted at the location of the overlapping source images, so it controls the contrast of both beams simultaneously.

The differential beam steering also has the important effect that two distinct images appear on the photographic film. Image 1 corresponds to the light beam produced by spark 1 and image 2 to that of spark 2. Therefore, by controlling the time interval between spark firings, one regulates the "framing rate". This is done as follows: an Intel 8085 microprocessor generates two TTL pulses, each on a separate channel, with specified timing between pulses. The pulses trigger the high-voltage power supplies (Xenon Corp., Model 437B) which in turn activate the sparks. The