Experimental Investigation of the Interaction of Unsteady Flow With Combustion

K.-U. Schildmacher

R. Koch

Institute of Thermal Turbomachinery,
University of Karlsruhe,
Kaiserstrasse 12,
76128 Karlsruhe, Germany

In order to reduce the dimensions of the combustor, swirl stabilized flames are used in heavy duty gas turbines. In our recent investigation of the swirling flow at a single heavy duty gas turbine burner under nonreacting conditions typical instabilities like precessing vortex cores and vortex shedding have been found (Schildmacher et al., Proceedings of the 6th European Conference on Industrial Furnaces and Boilers). In the present paper the experimental investigations will be discussed. Combustion instabilities have been analyzed by phase-locked laser doppler anemometer measurements. For the reacting flow, also combustion instabilities could be detected. The amplitude increases strongly with the equivalence ratio. The frequency of the oscillations for reacting conditions has been found to be slightly shifted towards lower frequencies compared to those of the corresponding nonreacting flow. In addition, for the reacting flow a linear and nonlinear range of oscillations could be discriminated. [DOI: 10.1115/1.1789512]

Introduction

Strong limitations of NO_x emissions imposed by legislation forced the gas turbine industry in recent years to adopt premixed lean combustors which lead to a significant decrease of emissions [1]. However, premixing burners of present gas turbines exceed the emission level of an ideal premixed flame by a factor of about 2 which is mainly to be attributed to nonperfect air-fuel mixing. As pointed out by Kraemer et al. [2], spatial mixing is quite perfect in most cases, but temporal fluctuations degrade the mixing quality. These temporal fluctuations of the mixing can be caused by vortex shedding or Kelvin-Helmholtz instabilities [3].

Although precessing vortex cores and vortex shedding have been investigated in a lot of publications of nonreacting swirling flows [4] not very much is known about the impact of these flow instabilities on combustion [5]. In order to analyze instability mechanisms of the reacting flow in detail, a spatially and time- and phase-resolved flow field analysis using LDA has been performed. The oscillating reacting flow was analyzed at different sound levels. The LDA investigations were supported by pressure fluctuation measurements which where also used to synchronize the laser doppler anemometer. In the paper, first the transparent test rig will be described and a short outline of the measurement technique will be given. In the main part, the cold flow instabilities will be reviewed briefly and then the instabilities of the reacting flow will be discussed.

Burner

In this study, a single test burner of industrial size was investigated within an atmospheric test rig (Fig. 1). It is fired by natural gas. The burner (Fig. 2) is operated in a combustor casing which provides excellent optical access for velocity measurements by LDA. The combustion chamber has a square cross section with a truncated pyramid shape at the exit.

The burner air passage consists of two concentric annular swirlers. The inner axial swirler has nozzles for pilot and nonpremixed gas. At the outer diagonal swirler, the gas is injected through holes in the swirler blades in order to enhance premixing with the air.

Contributed by the International Gas Turbine Institute (IGTI) of THE AMERICAN SOCIETY OF MECHANICAL ENGINEERS for publication in the ASME JOURNAL OF ENGINEERING FOR GAS TURBINES AND POWER. Paper presented at the International Gas Turbine and Aeroengine Congress and Exhibition, Atlanta, GA, June 16–19, 2003, Paper No. 2003-GT-38644. Manuscript received by IGTI, Oct. 2002, final revision, Mar. 2003. Associate Editor: H. R. Simmons.

Burner Operation Conditions

The burner can be operated either in nonpremixed or premixed mode [6]. In case of nonpremixed operation, the natural gas is injected solely through the nonpremixing nozzles. In premixed mode, the premixing gas nozzles and to a minor extent the pilot nozzles are used. In both modes, the air is fed through the axial as well as through the diagonal swirler passages with the same flow split.

In the gas turbine at nominal operation conditions, the burner is operated in premixed mode with pilot gas injection for better flame stabilization. Under test rig conditions, the pilot gas injection is not necessary for stable combustion. In order to prevent any disturbance of the premixed flame by the pilot burner, no pilot gas was used. In this study, the investigations have been performed in premixed mode with a constant air volume flow at atmospheric pressure. The air was pre-heated to 673 K. The Reynolds number at the burner mouth was 10^5 and the thermal power varied between 420 kW (ϕ=0.5) and 810 kW (ϕ=0.83).

Experimental Techniques

The velocity field was investigated by a two-dimensional (2D) laser doppler anemometer (LDA) (Fig. 3) in back-scattering mode. The axial and tangential velocities have been recorded in the x-r plane (Fig. 2). The air stream was seeded by Al_2O_3 particles of an average diameter of 1 μm. The data rate was 4–20 kHz in the main flow and the validation rate was 60–90% for a duration of 20 s per measurement position. Close to the center where the recirculation zone of the flame is located, the data rate dropped sometimes to less than 1 kHz.

In addition, the LDA investigations were accompanied by pressure fluctuation measurements. Due to the high temperatures in the combustion chamber, the quartz pressure sensor was implemented into the air plenum of the burner where the air temperature is 673 K. The pressure signal was conditioned by a bandpass filter of ±2.5 Hz half width around the pronounced peak frequency at 254 Hz. This filter signal was also used to synchronize the burst spectrum analyzers of the LDA (Fig. 3). In contrast to the nonoscillating flow, the LDA-particle distribution over time is not uniform. The instantaneous records exhibit a much higher particle rate at moments of high velocities [7]. Thus velocity biasing had to be taken into account when determining the time-averaged velocities of the oscillating flow [8,9].

Copyright © 2005 by ASME

Downloaded 15 Mar 2010 to 129.137.90.23. Redistribution subject to ASME license or copyright; see http://www.asme.org/terms/Terms_Use.cfm

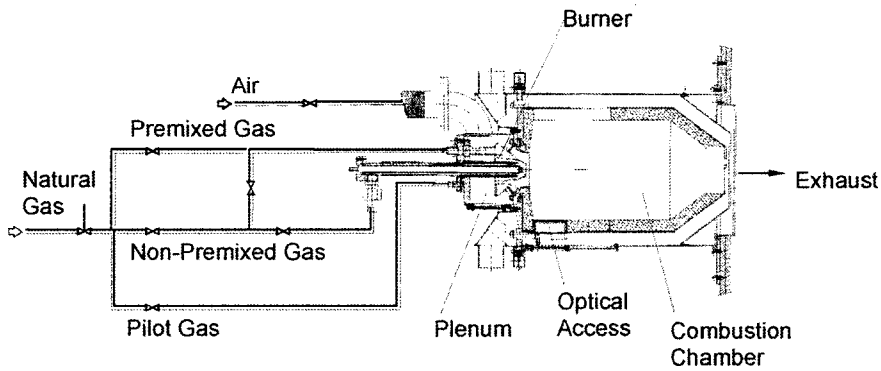

Fig. 1 Sketch of the test rig

Review of Cold Flow Instabilities

Investigations of the nonreacting flow [10] reveal a pronounced frequency of the instabilities which is proportional to the air flow (constant Strouhal number) (Fig. 4). This phenomenon was attributed to vortex shedding at the burner mouth. An accompanying large eddy simulation of the nonreacting flow [11] revealed that there is a precessing vortex core which triggers vortex shedding in the shear flow region at the burner mouth. In addition, investigations of the fuel concentration for nonreacting conditions showed that alternating pattern of rich and lean fuel concentrations is generated by vortex shedding (Fig. 5), through the time-averaged fuel concentration is axis symmetrical and much more homogeneous [10]. For comparison, the corresponding operation point of the reacting flow is indicated in Fig. 4. The reacting flow was investigated at constant air flow.

Reacting Flow Analysis

Combustion Stability. As indicated previously, under reacting flow conditions the air flow was kept constant and the equivalence ratio was varied by modifying the fuel flow.

The pressure fluctuations of the combustion oscillations were found to strongly increase with the equivalence ratio (Fig. 6). At $\phi=0.66$ first oscillations could be detected by the pressure transducer. The pressure amplitude at the peak frequency was just twice as high as the turbulent combustion noise at nominal operating conditions without oscillations ($\phi=0.5$).

Audible oscillations started at an equivalence ratio greater than 0.71 with a pressure amplitude of the pronounced frequency peak that is five times higher than the turbulent combustion noise. In

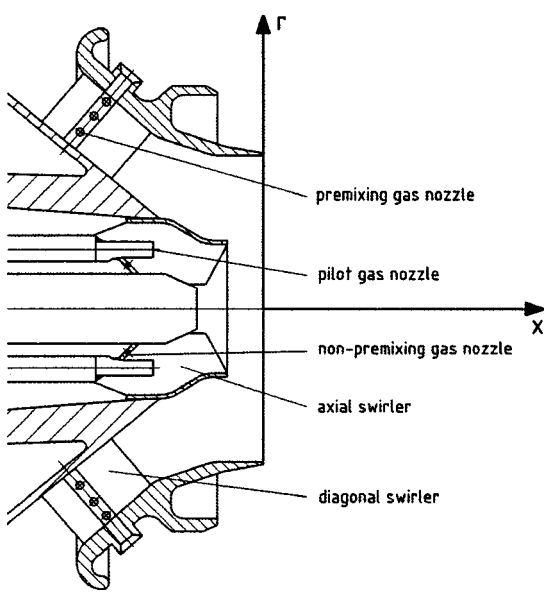

Fig. 2 Sketch of the burner

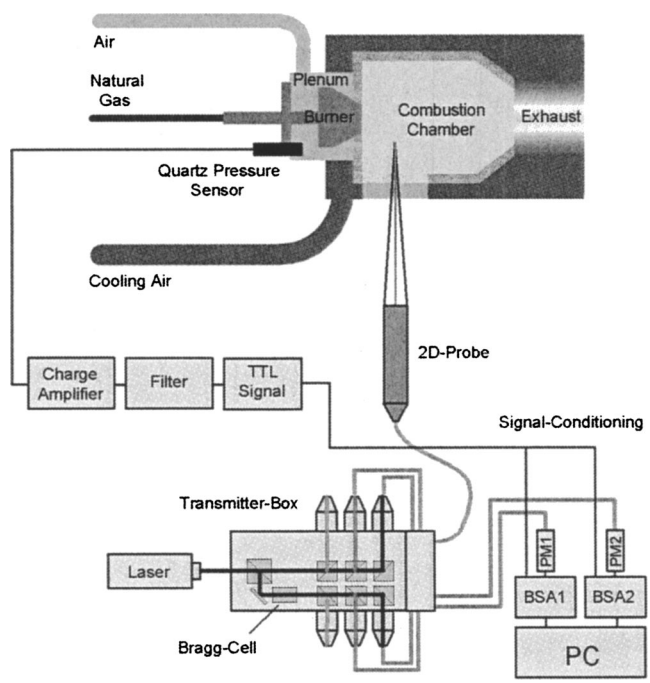

Fig. 3 Experimental setup for the LDA investigations

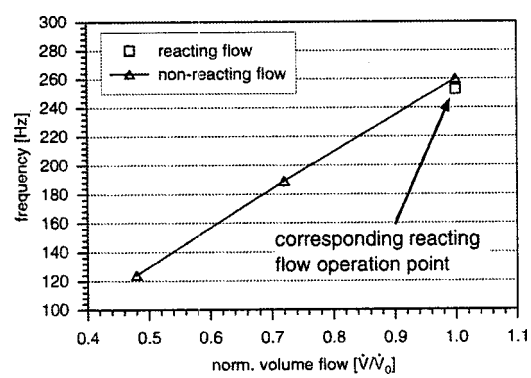

Fig. 4 Frequency of instability

Downloaded 15 Mar 2010 to 129.137.90.23. Redistribution subject to ASME license or copyright; see http://www.asme.org/terms/Terms_Use.cfm

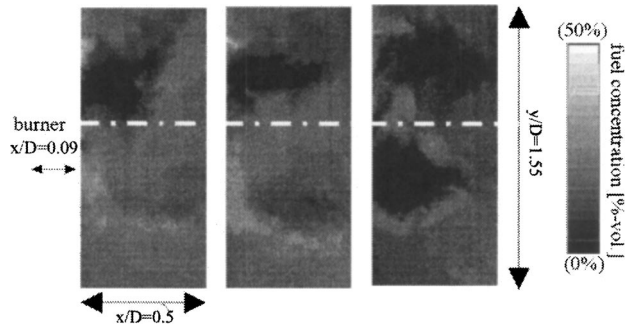

Fig. 5 Instantaneous fuel concentration for premixed operation (nonreacting flow)

the transition region at $\phi \approx 0.75$, the sound level was not constant over time but fluctuated between quiet and loud. At $\phi > 0.77$, the oscillations became loud with a pressure amplitude that was more than 50 times higher compared to the turbulent combustion noise at nominal operation. The pressure fluctuation amplitudes of the quiet oscillations are 3.2% of the amplitude of the loud oscillations. This observation indicates that for the present burner the amplitudes steadily grow with increasing equivalence ratio in contrast to a sudden excitation which can observed in other combustion systems.

Self-Excited Combustion Instabilities at High Oscillation Sound Level. Subsequently, the flow fields, as recorded by LDA, will be compared. Nonoscillating flow conditions at $\phi = 0.66$ and the oscillating flow condition exhibiting weak ($\phi = 0.71$) and strong pressure fluctuations ($\phi = 0.83$) will be considered.

Figure 7 shows the time-averaged axial velocity field at high oscillation level ($\phi = 0.83$). The flame is stabilized in regions of high velocity gradients and therefore is very sensitive to instabilities like vortex shedding which are possibly triggering combustion oscillations. The signal of the pressure sensor which is located inside the air plenum (Fig. 3), was used as reference signal for phase angle matching. All plots of the velocity measurements are referenced to the phase angle of the pressure fluctuations at the air plenum (Fig. 8). From the phase-locked LDA data records, mean fluctuations have been derived by averaging over 5000 periods. These averaged data revealed different phase shifts and wave forms depending on the location. At the reaction zone ($x/D = 0.63$, $r/D = 0.56$), the highest fluctuations of the axial as well as the tangential component were detected (Fig. 7). The averaged phase-locked RMS values were nearly constant over the phase angle. At a position radially further outward ($x/D = 0.63$, $r/D = 0.75$) the highest mean axial velocities are present. There, the

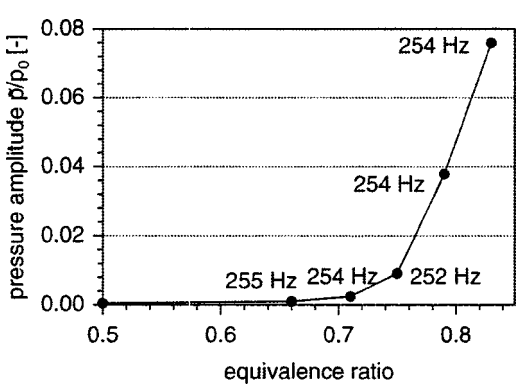

Fig. 6 Pressure amplitude and oscillation frequency for different equivalence ratios

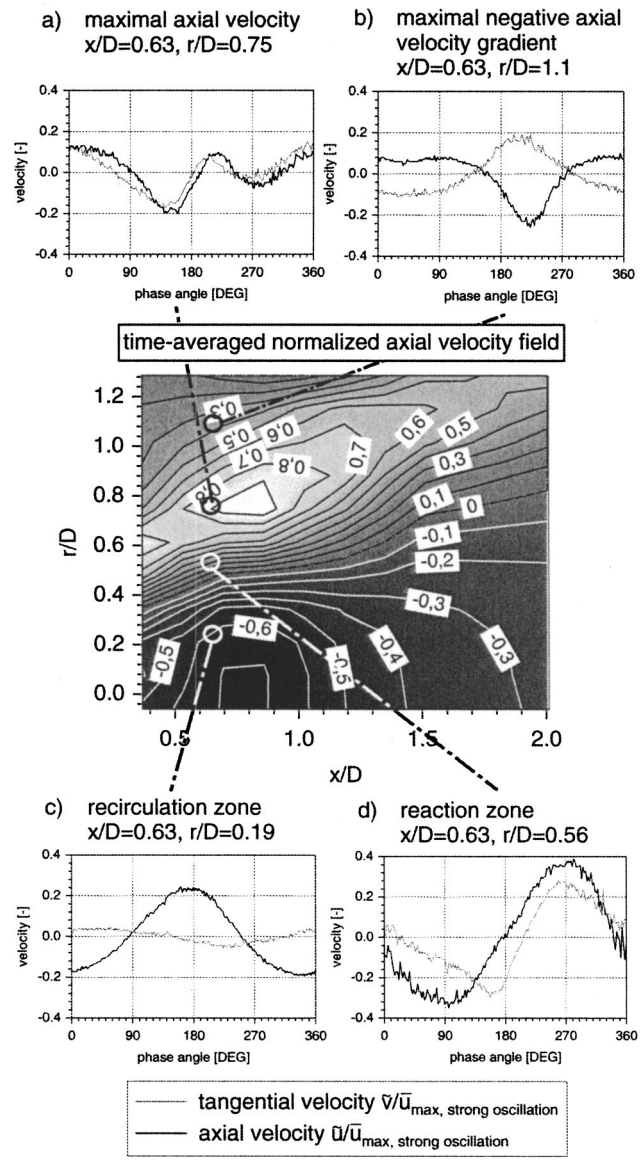

Fig. 7 Normalized axial velocity field and normalized local phase-locked velocity fluctuations at high oscillation sound level ($\phi = 0.83$)

axial as well as tangential velocity fluctuations revealed the first harmonic frequency which must be attributed to nonlinear effects. This phenomena was only detected at equivalence ratios greater than 0.75. In the recirculation zone at $x/D = 0.63$, $r/D = 0.19$ strong oscillations of the tangential velocity were detected which may be caused by mushroom shaped ring vortices.

The swirl has a major impact on flame stabilization. In Fig. 9 the local velocity ratio v/u is plotted over the phase angle for different positions and an equivalence ratio of 0.83. Regions which may trigger combustion instability are characterized by strong fluctuations. The fluctuations of the velocity ratio have

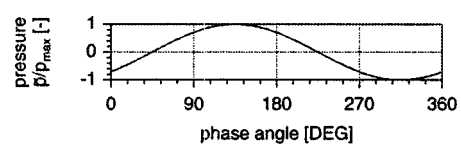

Fig. 8 Pressure amplitude at the air plenum

Downloaded 15 Mar 2010 to 129.137.90.23. Redistribution subject to ASME license or copyright; see http://www.asme.org/terms/Terms_Use.cfm

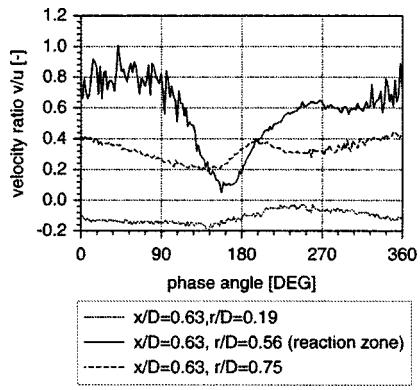

Fig. 9 Phase-locked velocity ratio *v/u* at high pressure fluctuations

been analyzed on basis of the LDA data. The data reveal, the strongest fluctuation of $0.1 \leqslant v/u \leqslant 0.8$ are found in the reaction zone ($x/D=0.63$, $r/D=0.56$). Because of the periodicity of the signal, the fluctuations must be attributed to coherent structures. The plot also indicates that for a short time at around 150 deg phase angle, swirl stabilization of the flame is interrupted which may cause to strong strain rates in the reaction zone and local flame quenching. Outside the recirculation zone only minor fluctuations of the velocity ratio were recorded.

Self-Excited Combustion Instabilities at Low Oscillation Sound Level. For an equivalence ratio of $\phi=0.71$ barely audible oscillations have been detected. The amplitude of the pressure oscillations was more than thirty times smaller compared to strong oscillations but five times higher than the turbulent combustion noise (Fig. 6). Figure 10 shows the flow field and the phase-locked velocity fluctuations at different positions. Everywhere inside the combustion chamber the frequency of the velocity fluctuations was identical to that of the pressure oscillations. Higher harmonic frequencies amplitude compared to operation at high oscillation level, the velocity fluctuations were reduced only by a factor of 4.

The velocity ratio v/u only varied between 0.35 and 0.5 (Fig. 11), and due to the reduced strain rate the flame was more stable.

Fluctuations Close to the Onset of Combustion Oscillation. As stated previously, the first onset of combustion oscillations was detected at an equivalence ratio of 0.66. The time-averaged velocity field at $\phi=0.66$ was quite similar to that of the weakly oscillating flow at $\phi=0.71$.

Due to the small amplitude of the pressure oscillations that was just twice as high as the turbulent combustion noise, it was not possible to generate a useful trigger signal for synchronization of the burst spectrum analyzers. Therefore subsequently frequency spectra will be used for the analysis. For extracting the spectral data, the resampling method was adopted [12,13].

The frequency spectra of the local axial and tangential velocities are shown in Fig. 12. Generally, a pronounced frequency peak was not found for the stable operating conditions. Very small sinusoidal velocity fluctuations at about 254 Hz could only be detected in the axial component at regions of high velocities ($x/D=0.37$, $r/D=0.56$). Comparing the spectra obtained for the reacting case (Fig. 12) to those of the corresponding nonreacting flow case, the coherent flow structures which are present in the nonreacting flow and which cause the pronounced frequency peak at 263 Hz are not reproduced under reacting flow conditions.

Moreover, even in the flow field upstream of the reaction zone (e.g., $x/D=0.37$, $r/D=0.56$) no fluctuations are present. This emphasizes the strong impact of the heat release on the generation of coherent flow structures. This observation is also confirmed by Fig. 13. The frequency and the corresponding Strouhal number

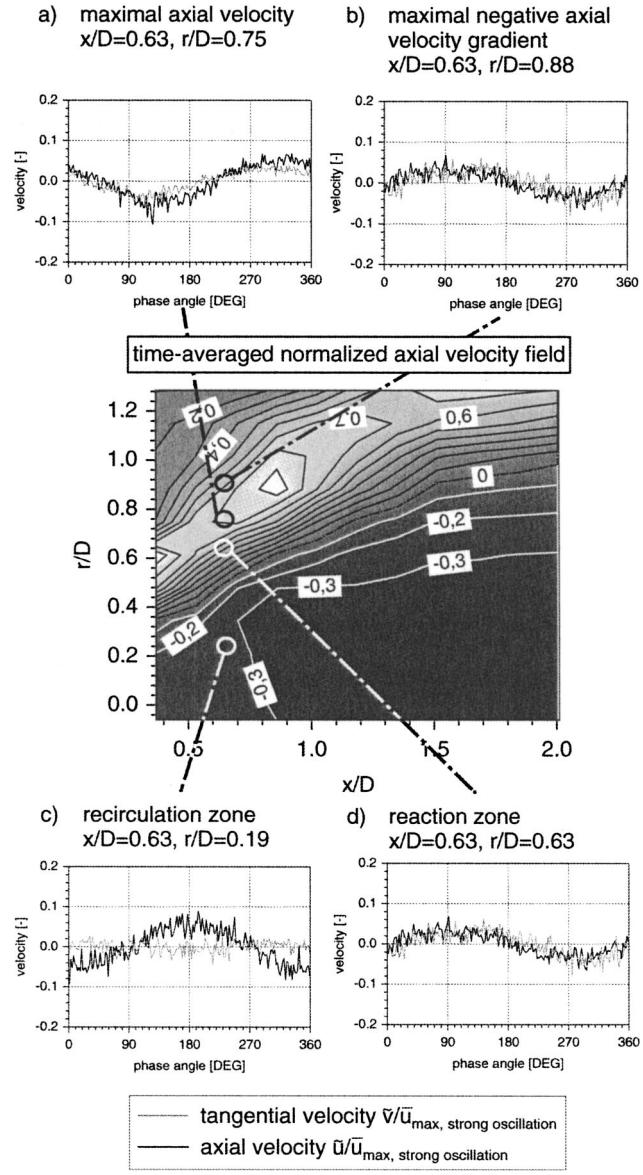

Fig. 10 Normalized axial velocity field and normalized local phase-locked velocity fluctuations at low oscillation sound level (ϕ=0.71)

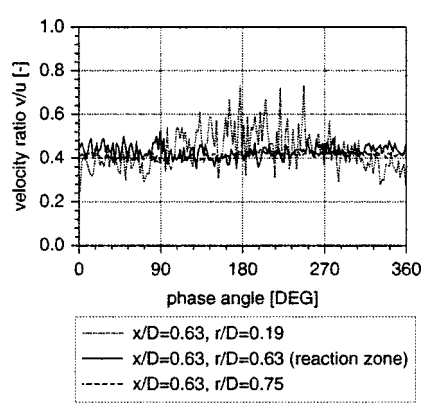

Fig. 11 Phase-locked velocity ratio *v/u* at low pressure fluctuations

Downloaded 15 Mar 2010 to 129.137.90.23. Redistribution subject to ASME license or copyright; see http://www.asme.org/terms/Terms_Use.cfm

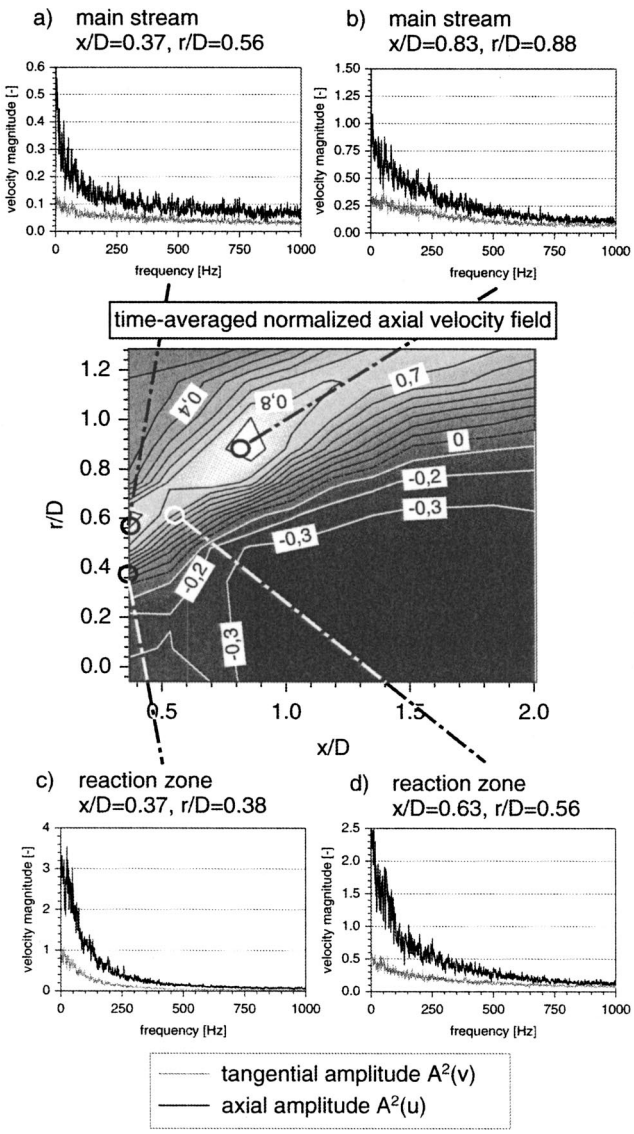

Fig. 12 Normalized axial velocity field and power spectra without oscillations (ϕ=0.66)

St$=f_{St}D/c_\infty$ of the oscillations are plotted for nonreacting and reacting conditions over the normalized volume flow. For the nonreacting flow, the frequency increases linearly to volume flow resulting in a constant Strouhal number. Such an observation may be attributed to vortex shedding [3,10]. For reacting flow conditions, however, the frequency only slightly changes with normalized flow and the Strouhal number decreases. This leads to the

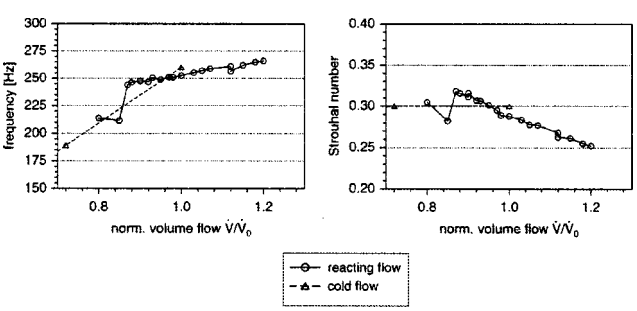

Fig. 13 Frequency of instability and Strouhal number

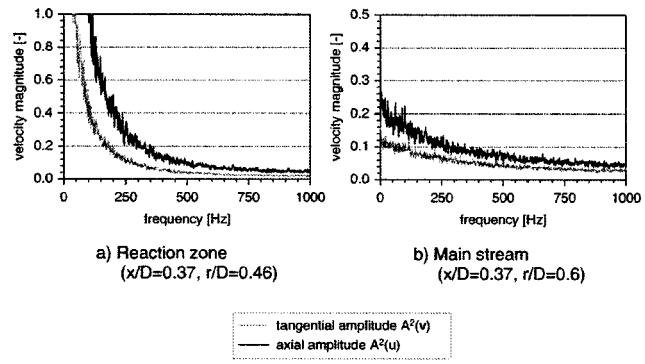

Fig. 14 Power spectra of velocities without oscillations at ϕ=0.5

conclusion that for self-excited reacting conditions, the resonant frequencies are linked to the acoustic eigenfrequencies of the combustion system which do not depend much on the burner air flow.

Conclusion

In order to study the impact of flow instabilities such as precessing vortex cores and vortex shedding on combustion, the unsteady reacting flow has been investigated by phase-locked LDA measurements. The velocity fluctuations of the reacting flow at different equivalence ratios (ϕ=0.66; ϕ=0.71; ϕ=0.83) have been recorded and compared to those of the nonreacting flow.

At an equivalence ratio of 0.66 no audible pressure fluctuations could be detected and in the spectrum of the velocity fluctuations no pronounced peak was found. For the same flow conditions, but for the nonreacting flow, a predominant frequency peak was found which could be attributed to coherent flow structures. Comparing the spectra of the velocity fluctuations of nonreacting to those of reacting flow, the pronounced frequency peak previously found under nonreacting conditions was not present under reacting conditions. This observation indicates that the heat release has such a strong impact on the onset of coherent structures in flow.

At equivalence ratios lower than 0.66, a pronounced frequency peak could not be detected either by the LDA (Fig. 14) or by the quartz pressure sensor. For nonaudible oscillation at ϕ=0.66 only axial oscillation modes were identified, indicating that the onset of combustion oscillation is mainly triggered by axial-acting fluctuations. A Strouhal number about 0.25 could be associated with the presence of these vortex rings [14].

Increasing the equivalence ratio to 0.71, weak oscillations were found. The amplitude of the oscillations increased steadily (not suddenly) when increasing the equivalence ratio. The frequencies of these weak oscillations correspond to the acoustic eigenfrequencies of the combustion system and do not change with air flow. The velocity oscillations are of sinusoidal shape and of the same frequency as the pressure oscillation. This indicates that the instability can still be described by linear acoustics. The velocity ratio v/u showed small fluctuations that did not compromise stable combustion.

In the transient region (ϕ=0.75) the sound level alternated between quiet and loud. A small increase of the equivalence ratio to ϕ>0.75 led to very strong pressure oscillations but only to a small increase of the velocity fluctuations. The flow began to oscillate strongly and higher harmonic frequencies could be detected in the velocity fluctuations. The velocity oscillations are so strong that additional coherent structures such as ring vortices are generated which may be the reason for the first harmonic frequency found in the main flow region. In this region clearly a nonlinear acoustic mechanism is present. Strong fluctuations of the velocity ratio v/u between 0.1 and 0.8 were detected, and thus the swirled stabiliza-

Downloaded 15 Mar 2010 to 129.137.90.23. Redistribution subject to ASME license or copyright; see http://www.asme.org/terms/Terms_Use.cfm

tion of the flame was disturbed periodically for a short time. This mechanism seems to have a major impact on the combustion stability.

Acknowledgment

This study was supported by the EC under contract ENK5-CT-2000-00060 (PRECCINSTA) which is gratefully acknowledged.

Nomenclature

A = amplitude, magnitude
BSA = burst spectrum analyzer
c = velocity
c_∞ = axial velocity at the burner exit
D = burner outlet diameter
f = frequency
f_{St} = Strouhal frequency
p = pressure
PM1, PM2 = photomultiplier
r = radial direction
RMS = root-mean-square value
St = Strouhal number
u = axial velocity
$\dot{V}$ = volume flow
v = tangential velocity
x = axial direction
y = normal direction
ϕ = equivalence ratio

Subscripts

0 = nominal operation, design point
max = maximum

Superscripts

$\bar{}$ = time-averaged component
$\tilde{}$ = periodical component
$'$ = turbulent component

References

[1] Lefebvre, A. H., 1974, "Pollution Control in Continuous Combustion Engines," Fifteenth Symposium on Combustion, Combustion Inst., Pittsburgh, pp. 1169–1180.
[2] Kraemer, H., Dinkelacker, F., Huth, M., Leipertz, A., Poeschl, G., and Lenze, M., 1999, "Optimization of the Mixing Quality of a Real Size Gas Turbine Burner With Instantaneous Planar Laser-Induced Fluorescence Imaging," ASME Paper No. 99-GT-135.
[3] Coats, C. M., 1996, "Coherent Structures in Combustion," Prog. Energy Combust. Sci., **22**, pp. 427–509.
[4] Gupta, A. K., Lilley, D. G., and Syred, N., 1984, "Swirl Flows," ABACUS Press.
[5] Gutmark, E. J., Shadow, K. C., and Yu, K. H., 1994, "Methods for Enhanced Turbulence Mixing in Supersonic Shear Flows," Appl. Mech. Rev., **47**(2), pp. 375–417.
[6] Prade, B., Streb, H., Berenbrink, P., Schetter, B., and Pyka, G., 1996, "Development of an Improved Hybrid Burner—Initial Operating Experience in a Gas Turbine," ASME Paper No. 96-GT-43.
[7] Schildmacher, K.-U., Koch, R., Krebs, W., Hoffmann, S., and Wittig, S., 2002, "Experimental Investigation of Unsteady Flow Phenomena in High Intense Combustion Systems," *Proceedings of the 6th European Conference on Industrial Furnaces and Boilers*.
[8] Loseke, A. H., and Gould, R. D., 1991, "A Comparison of Velocity Bias Correction Techniques in Laser-Doppler-Velocimetry," ASME Fluid Measurement and Instrumentation Forum, **108**, pp. 63–68.
[9] McLaughlin, D. K., and Tiedermann, W. G., 1973, "Biasing Correction for Individual Realization of Laser-Doppler-Anemometer Measurements in Turbulent Flow," The Physics of Flow, **16**, pp. 2082–2088.
[10] Schildmacher, K.-U., Koch, R., Krebs, W., Hoffmann, S., and Wittig, S., 2000, "Experimental Investigations of the Temporal Air-Fuel Mixing Fluctuations and Cold Flow Instabilities of a Premixing Gas Turbine Burner," ASME Paper No. 2000-GT-0084.
[11] Schlueter, J., Schoenfeld, T., Poinsot, T., Krebs, W., and Hoffmann, S., 2001, "Characterization of Confined Swirl Flows Using Large Eddy Simulations," ASME Paper No. 2001-GT-0060.
[12] Host-Madsen, A., 1994, "A New Method for Estimation of Turbulence Spectra for Laser Doppler Anemometry," 7th International Symposium on Applications of Laser Techniques of Fluid Mechanics, Lisbon.
[13] Host-Madsen, A., and Caspersen, C., 1981, "Spectral Analysis—A Modern Perspective," Proc. IEEE, **69**(11), pp. 1380–1419.
[14] Laufer, J., and Monkewitz, P., 1978, "The Influence of the Dominant Large Scale Structures on the Initial Instability of a Low-Speed Circular Jet," Bull. Am. Phys. Soc., **23**, p. 1008.

Downloaded 15 Mar 2010 to 129.137.90.23. Redistribution subject to ASME license or copyright; see http://www.asme.org/terms/Terms_Use.cfm