Observations of Flame Behavior in a Laboratory-Scale Premixed Natural Gas/Air Gas Turbine Combustor From Planar Laser Induced Fluorescence Measurements of OH, Laser Doppler Anemometer Velocity Measurements, and Coherent Anti-Stokes Roman Spectrometer Temperature Measurements

Paul O. Hedman
Thomas H. Fletcher
Daniel V. Flores
Stewart G. Graham
Jason K. Haslam
Robert L. Murray
G. Wayne Timothy

Department of Chemical Engineering and Advanced Combustion Engineering Research Center,
Brigham Young University,
Provo, UT 84602

Instantaneous planar laser induced fluorescence (PLIF) images of OH, simultaneous axial/radial and axial/tangential velocity measurements with an LDA (laser Doppler anemometer), and instantaneous gas temperature measurements using a coherent anti-Stokes Raman spectrometer (CARS) were obtained in a pre-mixed, swirl-stabilized laboratory-scale combustor, fired with natural gas. Four operating conditions were examined (two swirl conditions and equivalence ratios of 0.80 and 0.65). The instantaneous PLIF images of OH illustrate the chaotic nature of the turbulent flame eddies. Mean and standard deviations of each variable were measured at different locations in the flame, along with probability density functions. Stability of the flame at each condition is related to measurements in the central and side recirculation zones. [DOI: 10.1115/1.1914804]

Introduction

Lean, premixed combustion is being used as a means to meet severe NO_x and CO emission regulations on stationary gas turbines. A series of laser-diagnostic experiments was performed in a lean-premixed combustion apparatus at the same lean operating conditions. Planar laser-induced fluorescence (PLIF) was used to image OH, two-component laser Doppler anemometry (LDA) [1] was used to measure velocity, and coherent anti-Stokes Raman spectroscopy (CARS) [2] was used to measure temperature. These data were obtained principally for evaluation of comprehensive gas turbine combustion models [3–5]. The laser diagnostic data presented in this paper were obtained in a laboratory-scale, gas-turbine combustor (LSGTC) with a pre-mixed, swirl-stabilized, natural gas flame. The LSGTC was operated at two swirl conditions [high swirl (HS) and medium swirl (MS)] and two fuel equivalence ratios (0.80 and 0.65) at atmospheric pressure. The LSGTC simulates many of the key combustor characteristics of commercial gas turbines [6], and provides a realistic flame where model predictions and in situ measurements can be compared. Use of advanced optical diagnostics permits near-instantaneous (about 10-ns resolution), nonintrusive measurements that provide insight into the physical processes that govern the combustion processes. This set of data is thought to be among the most complete for lean premixed combustion applicable to gas turbines, and therefore serves as a good test set for modern computer models.

Combustor Test Facility

The combustion facility used for this study is the same used by Hedman and co-workers [7–11]. The facility was further modified for this study to allow investigation of a premixed natural gas/air flame. This premixed natural gas/air combustor was developed with support from the US/DOE Advanced Turbine Systems program, and is referred to as the ATS burner. The laboratory-scale, gas-turbine combustor (LSGTC), illustrated in Fig. 1, was designed to reproduce the characteristics found in a modern annular combustor [6]. The combustor, which was provided to BYU by Wright Laboratory [12], consists of a four-sided chamber with metal corner fillets to more nearly simulate an axisymmetric combustor while maintaining adequate optical access. A metal plate or a quartz window can be placed in each wall, depending on the optical access required. The exit of the reactor was restricted by a flat plate with a 92-mm hole in the center.

The premixed swirl injector, illustrated in Fig. 2, is located in the center of the combustion chamber base. The injector consists of a stainless steel tube with a honeycombed brass insert. The brass insert serves to smooth the flow as well as provide a flame arrestor in case of flashback in the premixed fuel/air mixture. Inserts are installed in the injector to provide different magnitudes of swirl to the inlet flow. The swirler inserts are placed 40 mm

Contributed by the Fuels and Combustion Division of The American Society of Mechanical Engineers for publication in the ASME Journal of Engineering for Gas Turbines and Power. Manuscript received by the F&C Division July 30, 2003; final revision received May 5, 2004. Associate Editor: P. C. Malte.

 Copyright © 2005 by ASME

Downloaded 15 Mar 2010 to 129.137.90.23. Redistribution subject to ASME license or copyright; see http://www.asme.org/terms/Terms_Use.cfm

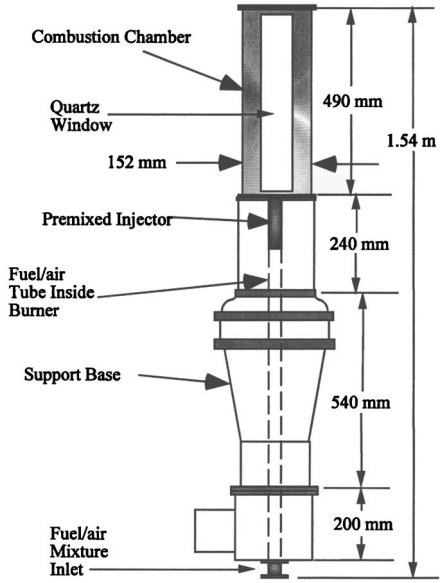

Fig. 1 Schematic of premixed combustor (adapted from Schmidt and Hedman [11])

above the brass honeycomb and secured by a threaded post that anchors the swirler to the brass honeycomb. A cap with an 18-mm hole in the center and beveled walls is placed on the top of the steel tube to coalesce the swirling flow at the injector exit. This cap was needed in order to make the burner operate successfully.

Figure 2 shows a schematic of the two swirl inserts used in this study. The inserts are labeled high swirl (HS) and medium swirl (MS) to coincide with the 60- and 45-deg slot angles. The swirl number (SN) indicated in Fig. 2 is a nondimensional number defined by the ratio of the axial flux of tangential momentum divided by the product of the axial flux of axial momentum and the equivalent nozzle radius [13].

Fuel flow to the burner was measured with a variable area flow meter and is reported in slpm (standard liters per minute, or 10^{-3} standard m^3/min) referenced to 1 atm (101 kPa) and 70 °F

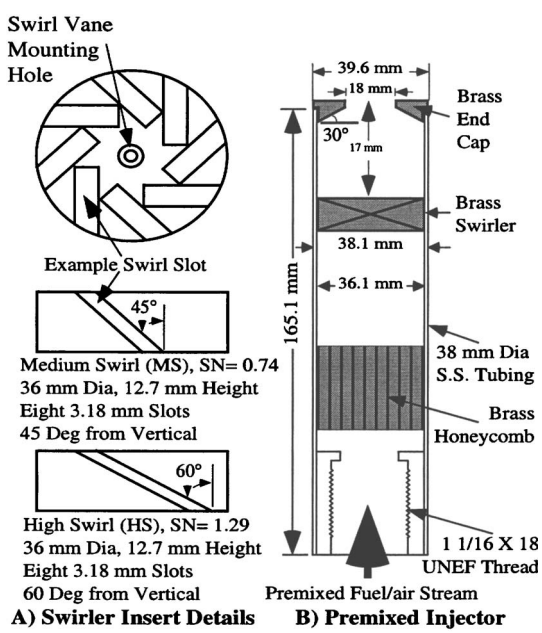

Fig. 2 Schematic of premixed injector and medium and high swirl block inserts (adapted from Schmidt and Hedman [11])

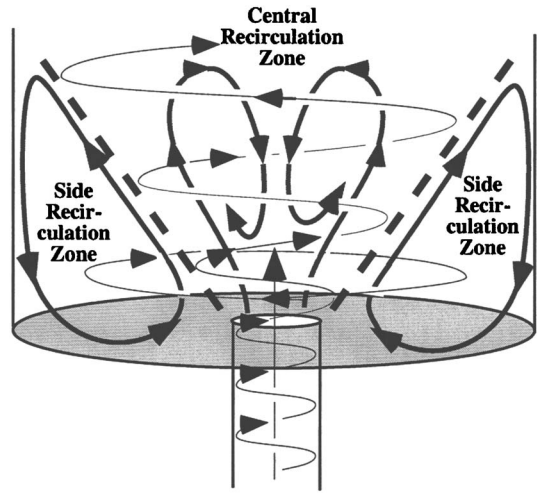

Fig. 3 Flow patterns in a confined, bluff-base, premixed, swirl-stabilized combustor (adapted from Gupta et al. [13])

(21.1 °C). Airflow was controlled by varying the upstream pressure of a choked flow nozzle. The diameter of the nozzle used for this study was 0.1485 in. (3.77 mm) providing airflow rates from 250 to 1000 slpm, depending on upstream pressure. Uniform mixing of gaseous fuel and air was assured by (a) the length of the tube from the mixing point to the burner, (b) a jet mixer in the feed system, and (c) a honeycomb flame arrestor. The air flow rate for the four test conditions used in this study was 500 slpm.

Visual Flame Characterization. Figure 3 presents a schematic drawing of the flow patterns present in the swirl-stabilized flame. The swirling flow creates a funnel or tornado-like vortex flow centered on the injector exit. A central recirculation zone and a side recirculation zone accompany the tornadolike flow. Both recirculation zones have been found to influence flame stability. Depending on swirl number and fuel equivalence ratio, one or the other of the recirculation zones may dominate the flame stability [1].

Wide variations in flame shape have been observed in the ATS burner for different combinations of swirl number and fuel equivalence ratio. These structures were studied both visually, through photographic and video recordings, with the PLIF images, and with the velocity and temperature results obtained in this study. Such observations have yielded insight into the location of the flame front, variation of flame structure with operating conditions, and the presence and strength of the recirculation zones. These flame shapes are primarily a result of the effect of the swirl intensity and fuel equivalence ratio on the flow field, with the magnitude of the airflow rate being of secondary importance. The equivalence ratio was varied by changing the fuel flow rate while maintaining a constant 500 slpm air flow rate. The changes in flame shape were characterized using the point of attachment, the location of the flame front, the structure of the vortex, and the visible intensity of the flame.

An example of a visual image of the flame structure is presented in Fig. 4 for a stoichiometric (ϕ=1.0), MS case. The ϕ=1.0 image was included in the paper to provide a photographic illustration of the flame structure. The ϕ=1.0 image was used because this image was brighter, more visual, and reproduced better than images from flames with $\phi<1.0$. It was visually observed that the flame at ϕ=0.80 was more stable than at ϕ=0.65. The flame with the HS injector was more coalesced and closer to the injector than with the MS injector. At ϕ=0.65, the flame was near the lean flammability limit, and was quite unstable for both swirl injectors. When using the MS injector, the flame would oscillate between two different flame structures, one that was more or less

Downloaded 15 Mar 2010 to 129.137.90.23. Redistribution subject to ASME license or copyright; see http://www.asme.org/terms/Terms_Use.cfm

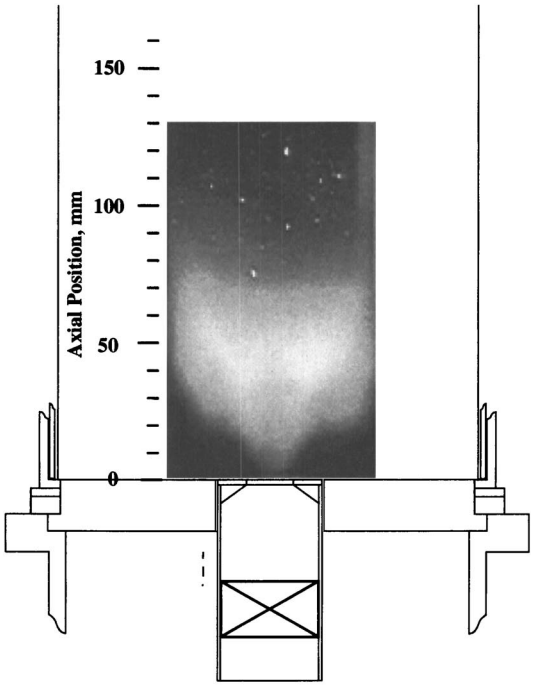

Fig. 4 Example video image of premixed natural gas/air flame (MS burner, 500-slpm air flow rate, ϕ=1.0)

attached to the vortex funnel, and one that was lifted well above the vortex funnel. The MS case at ϕ=0.65 was at the very edge of the lean flammability limit, and on occasion would actually extinguish.

Planar Laser-Induced Fluorescence. Planar laser-induced fluorescence (PLIF) is a valuable tool for studying combustion phenomena. Flame propagation is partly governed by the diffusion and transport of important combustion intermediates like OH and CH. Laser-induced fluorescence has the potential of measuring trace amounts of these short-lived combustion species at near instantaneous temporal resolution (10–100 ns). Likewise, because PLIF is laser-based, probing of the burner is nonintrusive. Laser-induced fluorescence measurements are often made at the focal point of a converging excitation laser [14]. However, due to the advances in detector and laser performance, fluorescence can be captured instantaneously over a two-dimensional area for many species. The two-dimensional image area captured resembles an instantaneous photograph-like image directly related to the concentration distribution of the combustion species being probed. The flame is probed with a thin sheet of laser light tuned to the appropriate wavelength. The PLIF images of OH provide detailed information regarding the location and shape of the flame structure. This structural information is very useful in analyzing burner designs, understanding combustion phenomena, and validating combustion computer models.

The use of PLIF to determine flame properties has become more popular in the last few years. For instance, use of PLIF and acetone tracers is a popular method to determine mixing characteristics [15–18]. Measurements of NO using PLIF are reviewed by Cooper and Laurendeau [19]. Measurements of OH using PLIF to determine flame structure in natural gas/air flames [20–25] and kerosene spray flames [26,27] related to gas turbine combustors have also been reported recently reported. However, none of these previous measurements have been combined with detailed laser-based measurements of velocities and/or temperature.

The excitation source used to pump the OH radical (283 nm) came from frequency doubling 566-nm laser light from a tunable dye laser (Spectra Physics PDL-3) with a KD^*P crystal in the wave extender. The tunable dye laser used a frequency doubled Nd:YAG laser (Quantaray) as a pump source. The final exiting laser beam at 283 nm was formed into a thin sheet approximately 0.5 mm thick and 13.0 cm wide. No attempt was made to determine exactly which OH transition was being pumped. For the purposes of this study, it was sufficient to simply scan across the OH transitions and select the one that gave the most intense OH image. This setting was then maintained for images at all test conditions so that the detector counts would be proportional to OH concentration. As the laser beam passed through the flame, an electronic camera (Princeton Instruments, ICCD-5765/RB-E) that uses an intensified charge coupled display (ICCD) with an electronic shutter speed of 100 ns was used to capture the induced fluorescence (308 nm) of OH. The ICCD camera was set up orthogonal to the laser beam and was fitted with appropriate filters to block unwanted light and with a Nikon f/1.2 quartz lens that would pass the uv light. A detailed schematic of the PLIF apparatus used here is found elsewhere [28]. Captured images were digitally transferred to computer memory for subsequent analysis.

Since the optical setup was identical for all test conditions, the actual detector counts may be proportional to the concentration of OH present at a given diagnostic location. Eckbreth [14] has suggested that in the linear regime the fluorescence signal power is proportional to the laser irradiance and the species population prior to laser excitation. However, the effects of saturation and quenching may cause the counts to be nonlinear. It is beyond the scope of this study to try to quantify this effect.

Figure 5 presents four example instantaneous OH images for each of the four test conditions. Images were selected that represent: (A) the least intense (i.e., lowest image counts, and most fragmented image) flame structure, (B) a flame structure of near average intensity, and (C) the most intense (highest image counts, and the most well-defined image). The fourth image (column D) was selected and included because of its oddity. The computer processing of the counts from each pixel into the false color images presented is somewhat misleading. For each image, the detector counts for each pixel were normalized to the peak detector count, and the image was scaled using Lab-View software to a false color image, with red scaled to the peak normalized value and black scaled to the minimum value. The false color images were converted to gray-scale images for publication. The detector counts were normalized to the peak relative intensity for that image whether the value of the peak detector count was 400 or 4000. Nevertheless, the instantaneous structure is well represented. Actual detector counts for representative locations within selected images are tabulated below (see Fig. 8) on normalized probability distribution functions (PDFs) for that location.

The observations about flame structure noted from the visual and camera images are confirmed with the instantaneous PLIF images. Operation at ϕ=0.80 produced stable flames with both the HS and MS injectors (e.g., Fig. 5, Images B-101 and B-126). The flame with the HS injector was more coalesced and closer to the injector than that with the MS injector. At ϕ=0.65, the flame was near the lean flammability limit, and was quite unstable for both swirl injectors. As noted visually, the flame would oscillate between two different flame structures, one that was more or less attached to the vortex funnel, and one that was lifted well above the vortex funnel. Visual observations showed that the MS case at ϕ=0.65 was at the very edge of the lean flammability limit. Figure 5, Image A-062, supports this observation, showing little OH in the central vortex and the flame being nearly extinguished. Even the image near the average structure (Fig. 5, Image B-105) shows little of the OH needed to support flame propagation.

The PLIF diagnostic capability allowed the collection of a significant number of separate instantaneous OH images (256 images at each test condition). Consequently, images of the mean and the standard deviation in the fluorescence signal were obtained by applying the appropriate statistical analysis to the collection of images, pixel by pixel. Figure 6 presents the average image of the

Downloaded 15 Mar 2010 to 129.137.90.23. Redistribution subject to ASME license or copyright; see http://www.asme.org/terms/Terms_Use.cfm

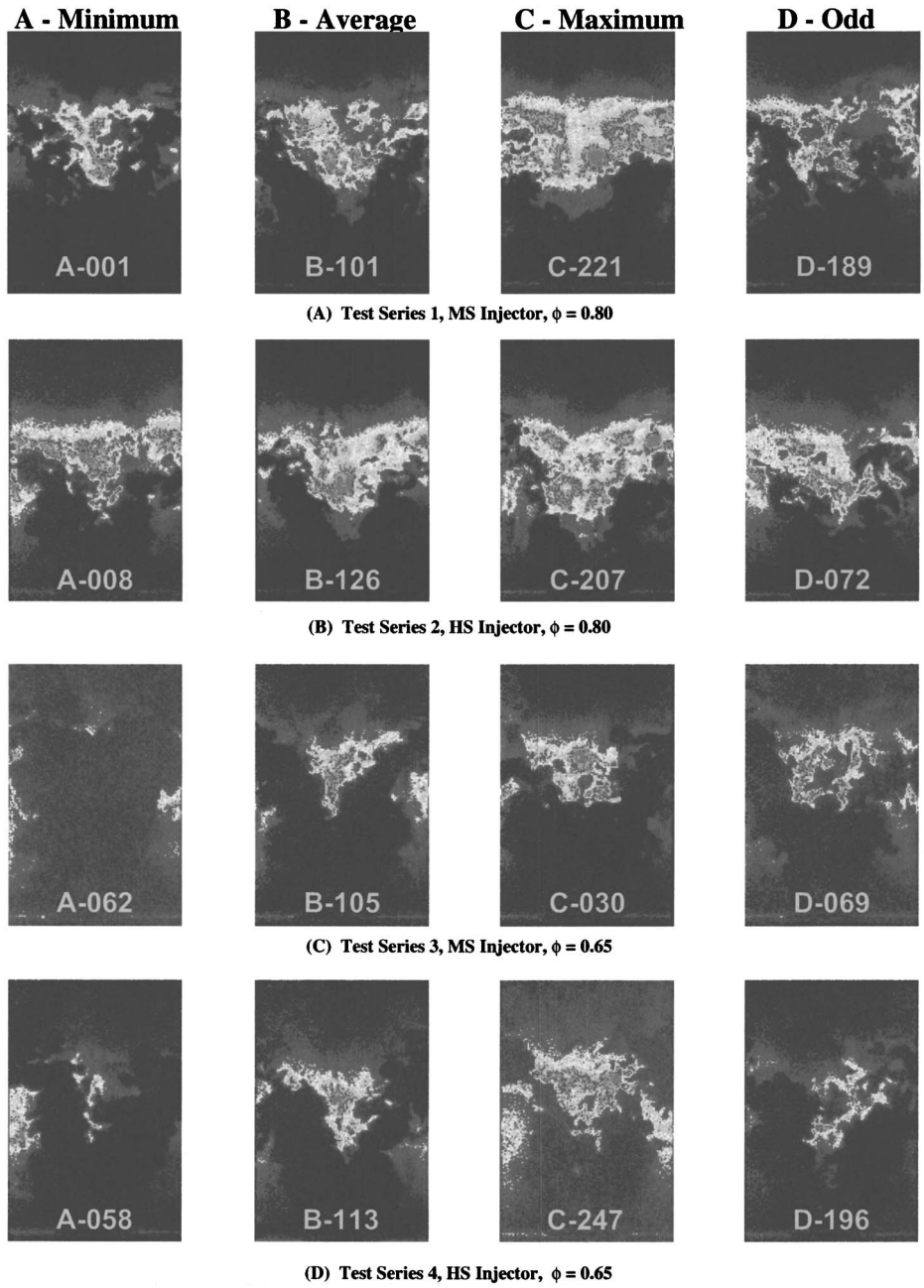

Fig. 5 Instantaneous PLIF OH images of flame structure

256 separate laser shots for the OH species for the four test conditions. The mean image is very similar to the observed video images. However, the variation in pixel count, as reflected in the normalized gray image, allows more insight into the structure of the flame and the character of the two different recirculation zones. As with the video images and instantaneous PLIF images, the mean PLIF images from the $\phi=0.80$ cases indicate a very structured stable flame for both the HS and MS injectors. The vortex for the HS case is narrower, and the top of the flame zone is closer to the injector than in the MS case. The $\phi=0.65$ cases reflect a narrower vortex and lower flame zone for the HS configuration. Both configurations are near lean blowout at $\phi=0.65$, but the MS case is more unstable, and consequently more likely to extinguish than the HS case. Standard deviation PLIF images were also calculated pixel by pixel and are shown in Fig. 7 for the four cases. The standard deviation gives insight into the amount of large-scale turbulence and zones where ignition/extinction occur within the flame. The greater coalescence in the flows with the HS injector is more readily apparent in the standard deviation images (see Fig. 7, images B and D compared to images A and C, respectively). The greater instability associated with the MS $\phi=0.65$ case is also apparent in Fig. 7, image C. As noted above, the normalized transform from the detector counts has a different maximum value for each image. These normalized images therefore provide means for comparison of the shape of the flow field, as depicted by the standard deviation calculation, rather than the relative intensity.

The actual detector counts at selected pixel locations have been used to create PDFs within the flame structure. The average count and peak count, and the shape of the PDFs provide additional insights into the flame characteristics, and have provided a measure of the effect of operating condition on the relative level of OH in the flame. Examples of PDF distributions for the most stable test case (HS, $\phi=0.80$) and for the least stable test case

Downloaded 15 Mar 2010 to 129.137.90.23. Redistribution subject to ASME license or copyright; see http://www.asme.org/terms/Terms_Use.cfm

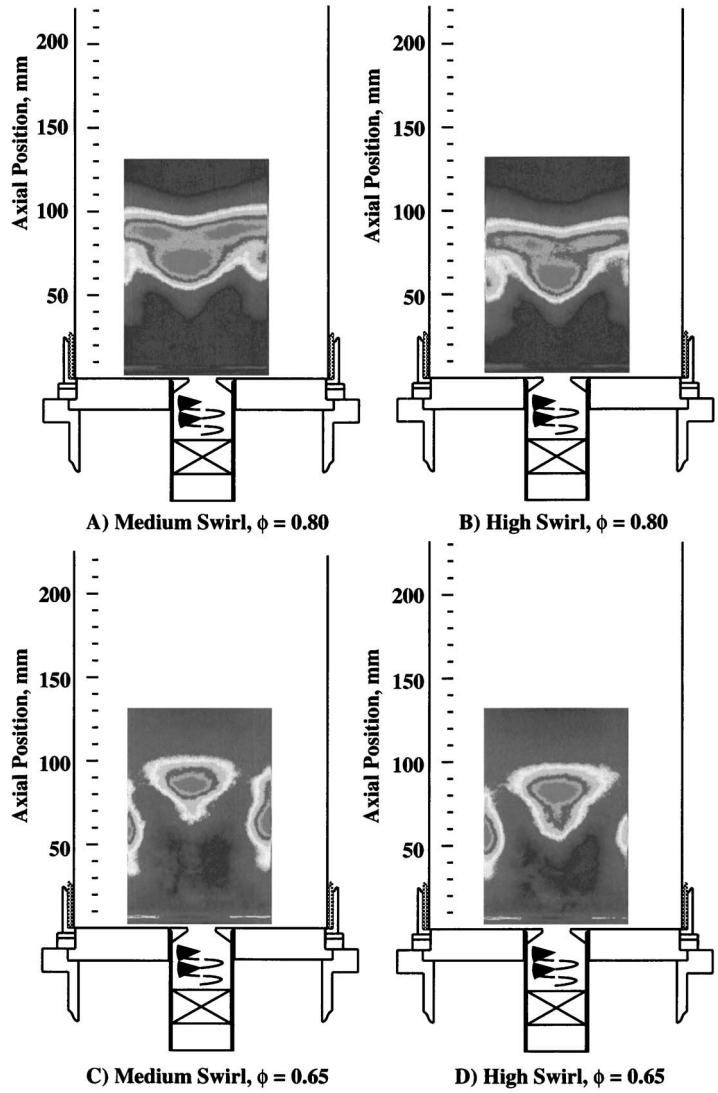

Fig. 6 Mean PLIF images of OH in the ATS burner (premixed natural gas/air, air flow=500 slpm)

(MS, ϕ=0.65) are presented in Figs. 8 and 9, respectively. Eight locations where the PDFs have been determined are superimposed on the mean PLIF image for both cases presented. The eight locations shown in Figs. 8 and 9 are identical for both cases. Locations were selected above the flame, in the most intense regions of the flame, and below the flame. The PDF plots appear to be more similar to beta distributions rather than Gaussian distributions. In every case, the PDF shows that there is a significant amount of time that no OH exists at that location (e.g., Fig. 8), even in the most intense part of the flame zone. Likewise, significant levels of OH are seen even in regions that are predominately outside, but near the flame zone. In Fig. 8 (HS, ϕ=0.80) the maximum detector count (4633 counts at maximum, 1652 counts at average) occurs at a location inside the intense part of the flame (location D). In Fig. 9 (MS, ϕ=0.65), the maximum detector count in the intense part of the flame (1926 counts at maximum, 402 counts at average) occurs at location B. This suggests that the concentration of OH in the MS, ϕ=0.65 case is about one fourth that of the HS, ϕ=0.80 case. The nonlinear PLIF response and the possibility of fluorescence saturation may alter the interpretation of concentration slightly. Nevertheless, the magnitude of the detector counts, as well as the corresponding PDFs, provides considerable insight into the character of the turbulent, reacting flame.

Figure 9 further quantifies the unstable nature of the MS, ϕ=0.65 case. Even in the most intense region (location B), there is a considerable amount of time when no OH is detected in the central vortex region. It is apparent that the stabilization process in the turbulent, swirl-stabilized flame is a very complicated process. The PLIF images obtained have provided some insight into this process, but must be considered with the velocity and temperature data to provide a more complete understanding about the turbulent combustion process and flame stability.

LDA Velocity Measurements. The LDA setup used in this study is a two-color system in forward scattering mode [1,29] originally developed by Schmidt and Hedman [11]. The argon-ion laser was operated in multi-line mode lasing at several frequencies simultaneously. The multi-frequency laser beam was passed through a collimator to reduce beam divergence, and then polarized. A color separator and mirrors were used to select the two strongest wavelengths, 488 nm (blue) and 514.5 nm (green). The green beam was split into two beams in the horizontal plane, and the blue beam was split into two beams in the vertical plane. One green and one blue beam were passed through separate Bragg cells which allowed negative velocities to be obtained. The four beams were passed through a beam expander and focused into two superimposed elliptical probe volumes with major axes of about 2.3 mm and minor axes of about 0.13 mm. The focal length of the

Downloaded 15 Mar 2010 to 129.137.90.23. Redistribution subject to ASME license or copyright; see http://www.asme.org/terms/Terms_Use.cfm

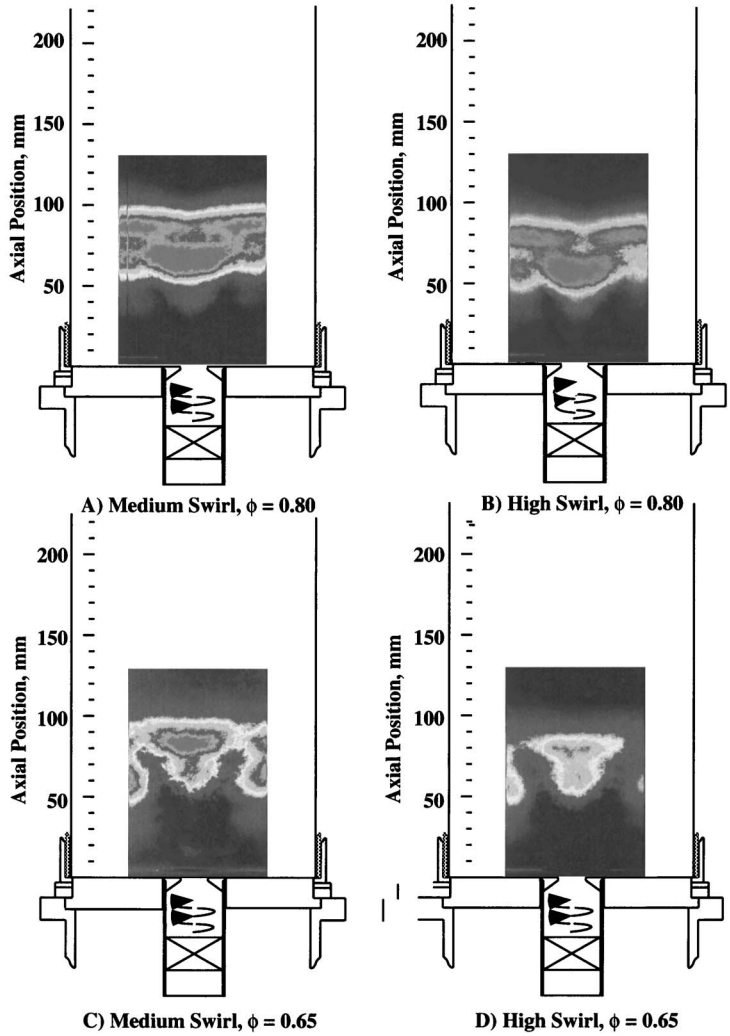

Fig. 7 Standard deviation PLIF images of OH in the ATS burner (premixed natural gas/air, air flow=500 slpm)

transmitting lens was 762 mm with the beams intersecting at a half angle of 3.1 deg. The diameter of the laser beam at the lens face was approximately 4 mm. This two-color, four-beam LDA configuration formed a probe volume with two fringe patterns at right angles to each other, with a blue fringe spacing of 4.44 μm and a green fringe spacing of 4.68 μm.

The airflow was seeded with about 6-μm diameter hollow aluminum oxide micro-spheres. The aerodynamic diameter of these particles was such that they followed the gas flow patterns, even in the recirculation zones. The seeding of the airflow occurred prior to the fuel addition point and well before the fuel injector. A particle traversing the probe volume produced two Doppler signals. The fringes of the blue beams gave Doppler signals for the axial velocity component and the fringes of the green beams gave the Doppler signals that corresponded to either the radial or tangential velocity component. Sample rates ranged from 400 counts per second to 10,000 counts per second, depending on where the probe volume was positioned in the flame. Sample rates were significantly lower in the high-temperature regions of the flame. The Doppler signals were collected in two different photomultiplier tubes (PMT). Each PMT was connected to a signal processor [30] for filtering and validation. Valid velocity signals were recorded and stored by computer using a direct memory access (DMA) digital I/O card from TSI and a data acquisition program [31] also developed by TSI.

Figures 10 and 11 provide example axial, radial, and tangential iso-velocity contour plots for the HS ϕ=0.80 and the MS ϕ=0.65 cases, respectively. The results for the other two cases are reported by Murray [1]. The analysis of the approximately 4000 instantaneous velocities obtained at each measurement location in the flame zone allows statistical investigation into the turbulent character of the flame to be made. Example standard deviations (in m/s) for the axial, radial, and tangential velocities were calculated at each location in the combustion chamber, and corresponding contour plots are shown in Figs. 12 and 13 for the HS ϕ=0.80 and MS ϕ=0.65 cases, respectively. Maximum and minimum standard deviation velocities are also presented.

Comparison of the standard deviation velocity maps with the corresponding mean velocity maps (Figs. 10 and 11) show that the highest standard deviation axial, radial, and tangential velocities occur in the positive velocity flow channel where the fastest positive mean axial, radial, and tangential velocities occur. In addition, the lowest standard deviation velocities occurred in the upper region of the combustion chamber and in the side recirculation zone (SRZ). Lower mean velocities were present in these areas. Past studies have suggested that a large standard deviation correlated with high turbulence regions [9,11]. In this study, the largest standard deviations occurred in the same location as the largest mean velocity.

Probability distribution functions (PDFs) have been used to describe the flow characteristics and to confirm the accuracy of the

Downloaded 15 Mar 2010 to 129.137.90.23. Redistribution subject to ASME license or copyright; see http://www.asme.org/terms/Terms_Use.cfm

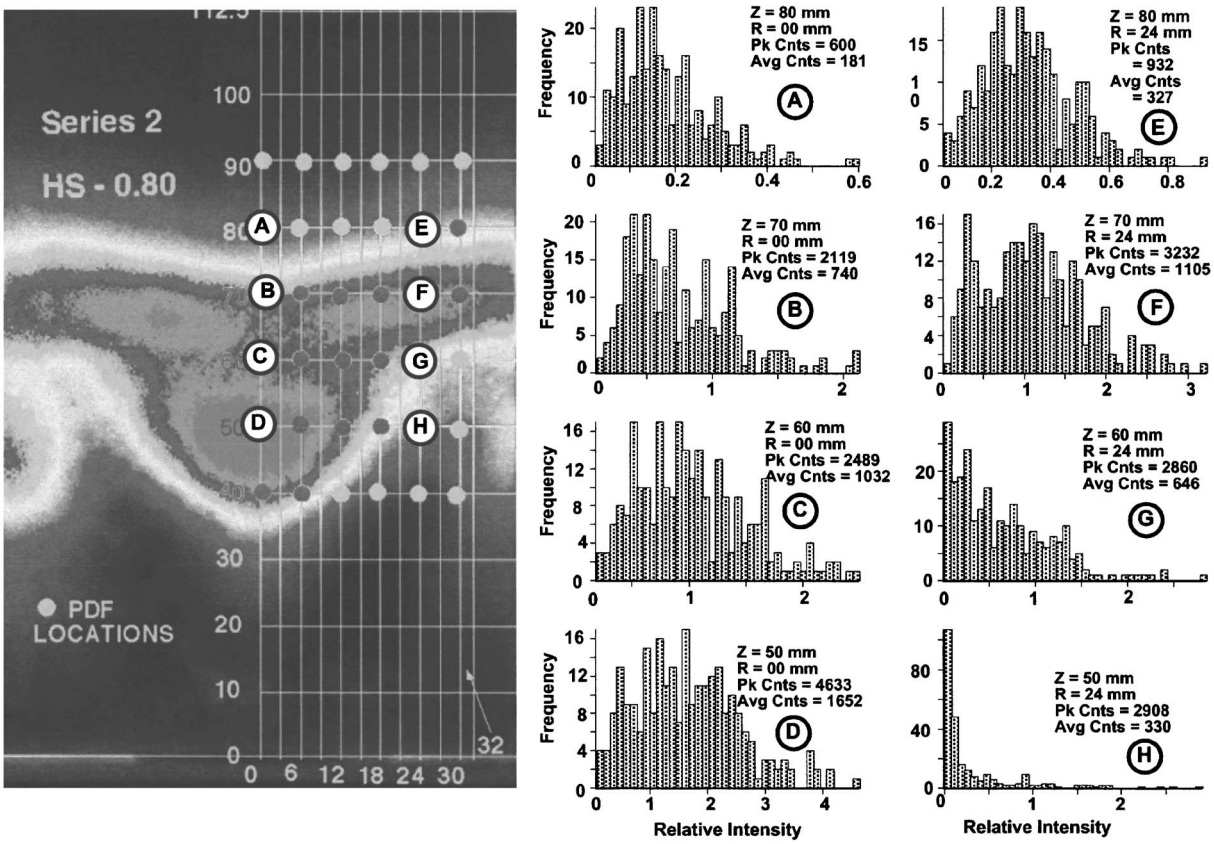

Fig. 8 Example PDFs from OH-PLIF images (HS injector, ϕ=0.80)

data. Figures 14 and 15 show examples of axial velocity PDFs at an axial position of 80 mm and radial positions from near the centerline to about a 40-mm radial location for the HS ϕ=0.80 and MS ϕ=0.65 cases, respectively. Additional PDF results are provided by Murray [1]. Labeled on the PDF are the axial position, radial position, mean axial velocity, and standard deviation. Generally, the axial velocity PDFs have a near Gaussian distribution in an identifiable flow zone. However, these PDFs had a bimodal distribution when gas velocities were measured across the shear layer between two different identifiable flow zones. Typically, this can be seen at a position near the zero velocity contour. These measurements have velocity components from both sides of the zero velocity boundary.

In Fig. 14, starting at a radial position of −1 mm, the PDF has a basic Gaussian profile with a slightly increased gradient in the positive velocity region. As measurements move to a radial position of 11 mm, the PDF became less Gaussian, with the positive velocity region of the PDF increasing in size, the negative velocity region decreasing in size, and the standard deviation increasing. At 17 mm, the positive velocity region of the PDF has increased significantly. At radial positions of 23 and 29 mm, the positive velocity region of the PDF continues to increase, the mean axial velocity becomes positive overall, the standard deviation continues to increase, and the bimodal peaks are about equal in size and shape. It should be noted that these two positions (23 and 29 mm) straddle the zero axial velocity contour, and hence have velocity components from both sides of the zero velocity boundary. At a radial position of 35 mm, the bimodal distribution continues, the positive region of the PDF increases, the positive mean axial velocity increases in magnitude, and the standard deviation remains fairly constant. At a radial position of 41 mm, the negative velocity region of the PDF has nearly disappeared, the mean positive velocity dominates the distribution, and the standard deviation has decreased slightly. Similar observations regarding the changes in PDF distributions as one moves from near centerline past the zero axial velocity contour can be seen in Fig. 15 for the MS ϕ=0.65 case.

As expected, the observations regarding the PDFs support the conclusion of strong shear layers in the combustion chamber. Bimodal distributions across the shear layer (zero axial velocity contour) were typically found from an axial position of 60 mm to an axial position of 100 mm. Below an axial position of 60 mm bimodal distributions were sometimes seen, but the spacing between measurements was too great to get a good progression of PDFs. At axial positions above 125 mm, the measured velocities across the shear layer were not high enough to demonstrate the bimodal distributions in the PDFs. Instead, the PDF usually represented a near Gaussian distribution with the peak of the distribution being at or near the axial centerline.

Discussion of Recirculation Zones. Recirculation zones play a major role in stabilizing a turbulent, premixed natural gas combustor. In this study, it was assumed that gas moving down into the ignition zone and radially towards the axial centerline improved the stability of the flame. In other words, the incoming premixed fuel and air needed a source of heat and/or radicals from the recirculated products to stabilize the flame. The intensity of the recirculation zones was based on how well the recirculation zones moved hot gases to the middle of the combustion chamber and down into the ignition zone. Examination of the zero axial velocity and zero radial velocity contours helps define recirculation regions. Zero velocity contours for both the axial and radial velocity maps are shown in both Fig. 10 and 11. The sizes of the recirculation zones are directly related to the heights and widths of the zero velocity contours. For convenience, a set of dimensions is defined in Fig. 10 and 11. The maximum height of the zero axial velocity contour, measured from the combustor base plate is labeled "h_{cu}" for the central recirculation zone (CRZ) and "h_{su}" for

Downloaded 15 Mar 2010 to 129.137.90.23. Redistribution subject to ASME license or copyright; see http://www.asme.org/terms/Terms_Use.cfm

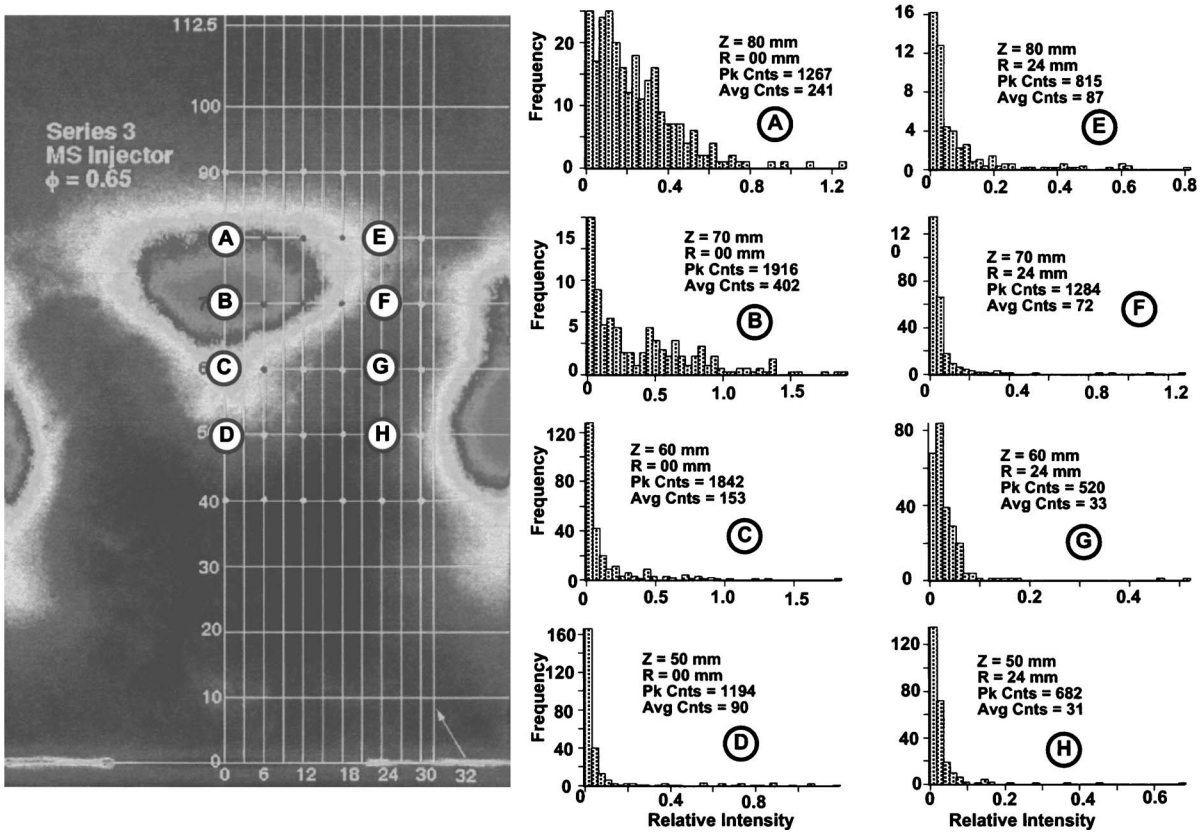

Fig. 9 Example PDFs from OH-PLIF images (MS injector, ϕ=0.65)

the side recirculation zone (SRZ). The maximum horizontal distance between the zero axial velocity contours for the CRZ is the width of the axial flow channel (w_{cu}), with a similar value (w_{su}) for the SRZ. Murray and co-workers [1,29] have used the heights and widths to quantitatively investigate the effect of flow recirculation on flame stability. The measured axial velocities were radially averaged inside both the central and side recirculation zones for each case. The resultant volumetric flow rates are shown at each axial position in Fig. 16 and 17.

The conclusions drawn are (1) the MS cases had a higher flow rate in the CRZ at an axial position of 120–150 mm than observed in the corresponding HS cases, (2) the HS cases had a higher Q_c at

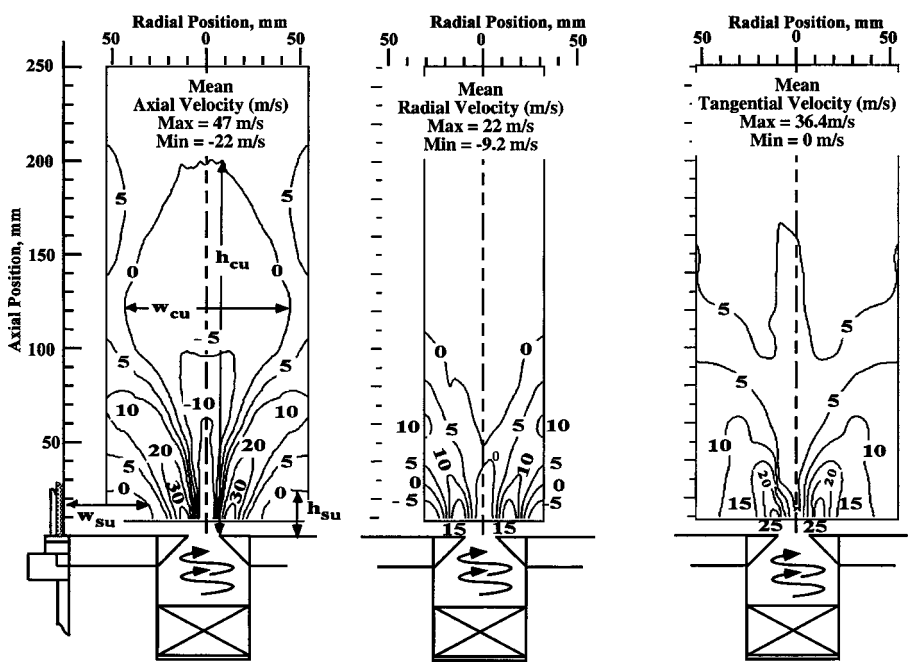

Fig. 10 Iso-contour maps of mean axial, radial, and tangential velocity (HS injector, ϕ=0.80)

Downloaded 15 Mar 2010 to 129.137.90.23. Redistribution subject to ASME license or copyright; see http://www.asme.org/terms/Terms_Use.cfm

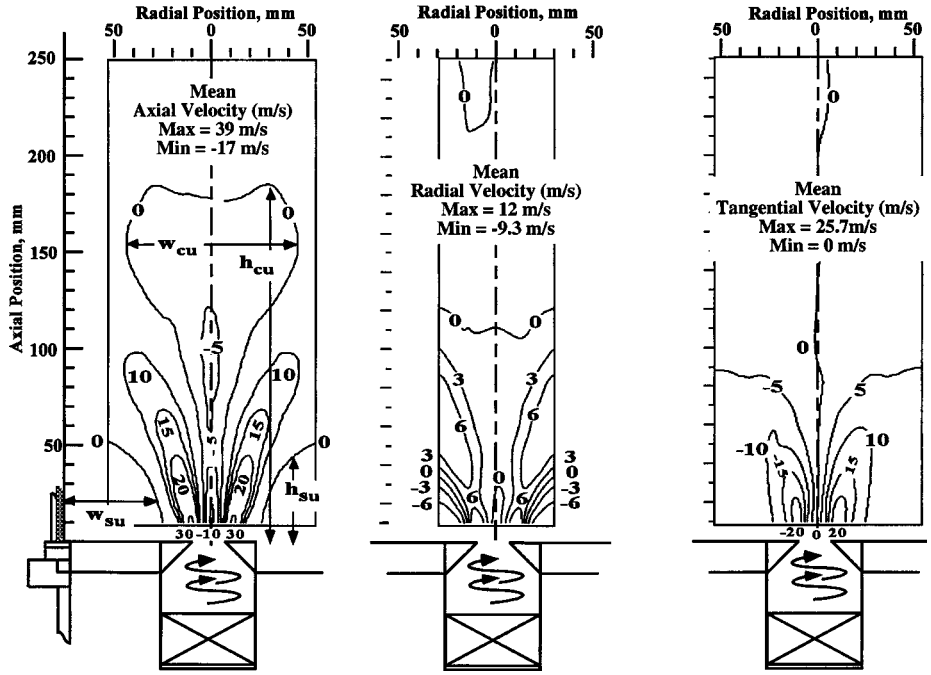

Fig. 11 Iso-contour maps of mean axial, radial, and tangential velocity (MS injector, ϕ=0.65)

an axial position of 50–120 mm than observed in the corresponding MS cases, and (3) the MS ϕ=0.80 case had about the same CRZ flow rate as the MS ϕ=0.65 case up to an axial position of 105 mm above the base of the combustion chamber.

The flow rates through the SRZ were much greater and extended higher up into the combustion chamber for the MS cases than the HS cases. The flow rates were only calculated out to a radial position of about 40–45 mm. Some of the cases had a SRZ that extended beyond a radial position of 40–45 mm. For these cases, the flow rate could only be determined up to the farthest radial position where data were taken, hence the values shown in Fig. 17 should be larger in most cases. Figure 17 shows that the MS cases had greater SRZ flow rates than the HS cases, with the largest flow rate in the MS ϕ=0.80 case. The MS ϕ=0.80 case was the only case that had the SRZ extend up into the visible flame zone.

The HS cases had larger CRZ flow rates than the MS cases at axial positions of 10–110 mm. The ignition zone was located below an axial position of 50 mm and the lower half of the visible flame zone was located from 50 to 110 mm. Therefore, HS cases had a larger CRZ flow rate, recirculating hot gases down through the lower half of the visible flame zone and into the ignition zone

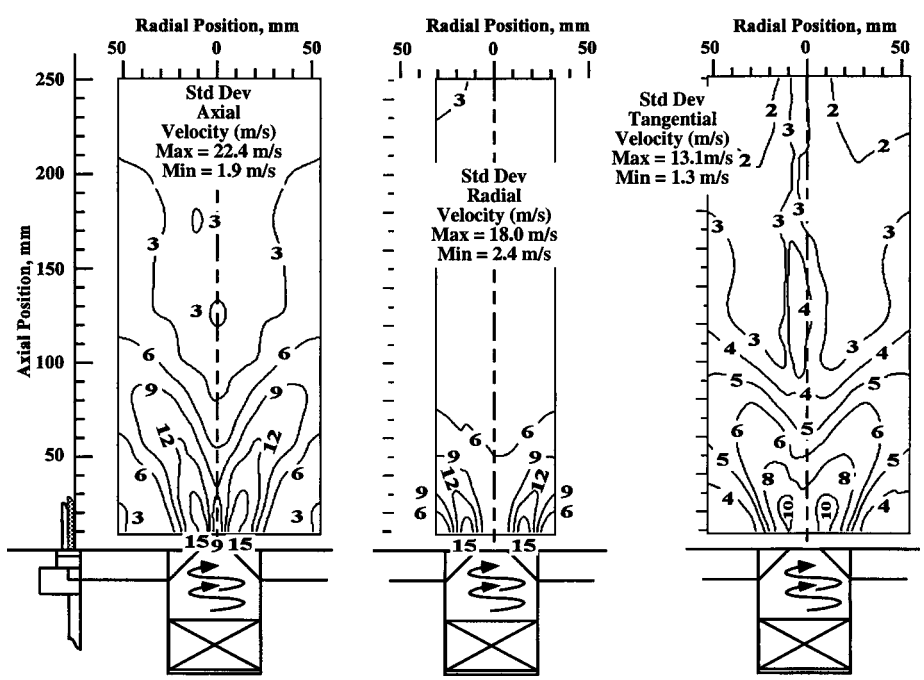

Fig. 12 Iso-contour maps of standard deviations of axial, radial, and tangential velocity (HS injector, ϕ=0.80)

Downloaded 15 Mar 2010 to 129.137.90.23. Redistribution subject to ASME license or copyright; see http://www.asme.org/terms/Terms_Use.cfm

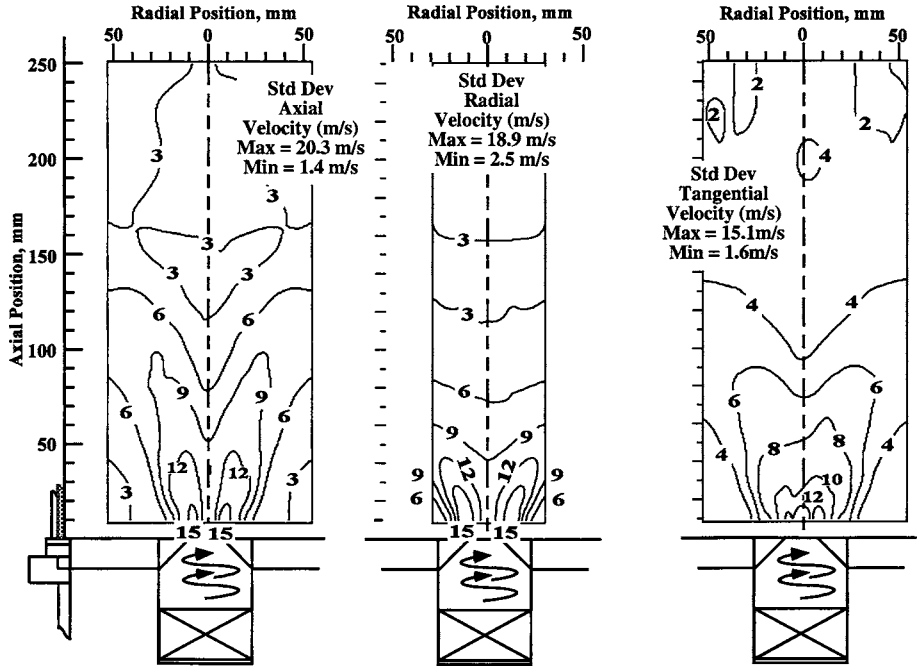

Fig. 13 Iso-contour maps of standard deviations of axial, radial, and tangential velocity (HS injector, ϕ=0.65)

than for the MS cases. In addition, the MS case did not have a change in the CRZ until after an axial position of 105 mm. This suggested that the CRZ played only a small role in stabilizing the MS cases. Large increases in the CRZ flow rate appear to occur in the visible flame zone. These large increases in the CRZ flow rate could partly be due to an increase in temperature. Further studies need to be made to identify the relationship between recirculated flow rates and temperature.

The MS cases had much larger SRZ flow rates than the HS cases in spite of limitations in completely calculating the SRZ flow rates for the MS cases. The MS ϕ=0.80 case was the only case where the SRZ extended up into the visible flame zone. It appears that the MS cases needed to have more recirculated hot gases coming down into the ignition zone to stabilize the flame. These conclusions support observations made earlier. However, only the MS ϕ=0.80 case extended up into the visible flame zone and thus only the MS ϕ=0.80 case had improved stability from the stronger side recirculation.

Gas Temperature Measurements

Coherent anti-Stokes spectroscopy (CARS) is based on Raman scattering of high-energy, coherent, laser beams. In general, a pump beam is split into two beams of equal intensity, and crossed with a Stokes beam that is tuned to the particular Raman resonance for the species being probed (e.g., 2331 cm^{-1} for N_2 and 2143 cm^{-1} for CO). Nonlinear wave mixing occurs in the diagnostic volume where the three probe beams cross, and a fourth beam is generated at the anti-Stokes frequency for the species being probed. The anti-Stokes spectra contain information that relates to gas temperature and species concentration. The nonlinear wave mixing is a vector process, and the laser-like anti-Stokes signal leaves the diagnostic volume in a prescribed direction that depends on the vector angles of the pump and Stokes beams. Since the signal is laser-like, it can be focused into a spectrometer for analysis. A detailed discussion of CARS theory and application can be found in Eckbreth [14].

Several types of CARS setups have been explored previously by Hedman and co-workers [32–35] in combustion systems. The current BYU CARS instrument [2,36] uses a frequency doubled ND:Yag laser (532 nm) to supply the two pump beams. A portion of the 532-nm laser energy is split off and used to excite the Stokes laser. A broadband, dual pyromethene dye laser (pyromethene 597 and 650 from Exciton) is used to simultaneously excite the Raman frequencies of N_2, CO, O_2, and CO_2. The spectrometer used in this study was patterned after the one used by Eckbreth at UTRC [14,37]. The diagnostic volume had a 200 -μm waist and a 1-mm length. The spectra were imaged onto an intensified photodiode array (IPDA) of an EG&G PARC 1421B camera, and recorded to a computer via an EG&G OMA model 1461. The specific characteristics of the IPDA and OMA system were determined by Boyack and co-worker [32,33]. Gas temperatures were determined from the N_2 CARS spectra using the FTCARS code [38] from SANDIA National Laboratories with modified input and output interfaces. Spectra that were too noisy or that could not be fit well with the FTCARS code were discarded. Flores and co-workers [2,36] conducted temperature calibration measurements on air in an electrically heated tube furnace equipped with a type-K thermocouple and a digital readout. Measurements in the range of 300–1000 K resulted in an average error of 30 K and standard deviations of 50 K. Accuracy of the temperature measurements at higher temperatures is thought to be within the usual ±50 K generally assumed for the CARS technique. Additional details of the instrumentation and calibration are given by Flores [2,36]. This study used the N_2 anti-Stokes spectra to deduce the gas temperatures presented herein.

Figure 18 presents the iso-contour mean gas temperature maps for the four cases tested in this study (HS and MS and ϕ=0.65 and 0.80). Figure 18(*a*) presents the results for the MS ϕ=0.65 (least stable flame) case and Figure 18(*d*) presents the results for the HS ϕ=0.80 (most stable flame) case. Comparison of these two figures shows the broadest effect of both swirl level and stoichiometry. The definition of stability used here is in regards to flame extinction rather than the amount of turbulent fluctuations present. The MS ϕ=0.65 (least stable flame) case was quite unstable, and the visible flame would move from a flame attached to the injector inlet to a flame that was lifted up into the combustion chamber. The mean temperature map does not show this effect because of the averaging involved. The average temperature contours do

Downloaded 15 Mar 2010 to 129.137.90.23. Redistribution subject to ASME license or copyright; see http://www.asme.org/terms/Terms_Use.cfm

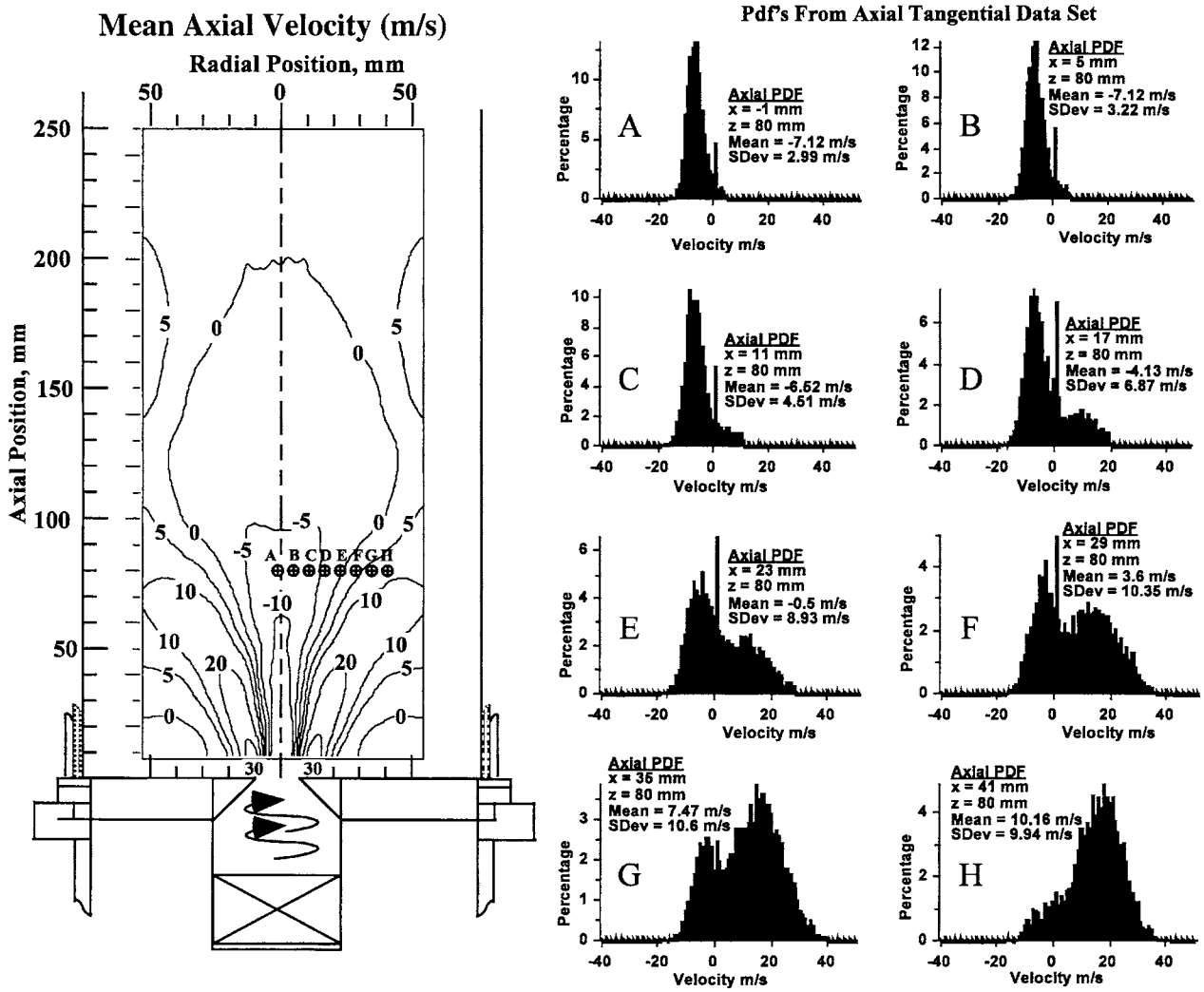

Fig. 14 Mean axial velocity contour map and example velocity PDFs (HS injector, ϕ=0.80)

show that the flame in the MS ϕ=0.65 case is higher in the combustion chamber when compared to the HS ϕ=0.80 (most stable flame) case. The peak temperature of the MS ϕ=0.65 (least stable flame) case was also lower (1449 versus 1648 K) than the HS ϕ=0.80 case. The adiabatic flame temperatures were 2000 and 1750 K for the ϕ=0.80 and ϕ=0.65 cases, respectively. The differences between measured and adiabatic flame temperature are attributed to the heat losses from the burner.

Comparison of Figs. 18(*a*) and 18(*b*), or Figs. 18(*c*) and 18(*d*) show that the increased heat release associated with the higher fuel equivalence ratio (0.80 versus 0.65) had the effect of increasing flame stability, causing the vortex core to be closer to the injector inlet. The increased heat release also causes a significant increase in the peak flame temperature.

The effect of swirl on flame structure can be seen by comparing Figs. 18(*a*) and 18(*c*) or Figs. 18(*b*) and 18(*d*). The higher swirl level has increased flame stability as evidenced by (1) the location of the flame vortex (HS moves the vortex closer to the injector), and (2) the higher peak flame temperatures associated with the higher swirl level (1550 versus 1449 K for the ϕ=0.65 cases, and 1648 versus 1603 K for the ϕ=0.80 cases).

As noted above, recirculation zones play a major role in stabilizing a turbulent, premixed natural gas combustor. Gas moving down into the ignition zone and radially towards the axial centerline improved the stability of the flame. The intensity of the recirculation zones was based on how well the recirculation zones moved hot gases to the middle of the combustion chamber and down into the ignition zone. The vortex structures shown in the gas temperature maps are consistent with the previous observations of OH-PLIF images, and the similar iso-velocity contours above.

The analysis of the approximately 1000 instantaneous gas temperature measurements obtained at each in situ measurement location in the flame zone allowed statistical investigation into the turbulent character of the flame to be made. Standard deviations for the gas temperatures were calculated at each location in the combustion chamber. Iso-contour plots of standard deviation (σ_T) temperature are shown in Fig. 19 for all four test cases. The actual values of σ_T were normalized by the local mean temperature, and the normalized standard deviation results are presented as percents. This treatment is analogous treatments of fluctuating velocity data to determine local turbulent intensities. Maximum and minimum mean temperatures are also included in Fig. 19.

The effects of swirl level and stoichiometry on gas temperature fluctuations are apparent in these maps. The effect of swirl level on flame structure and stability can be obtained by comparing Figs. 19(*a*) and 19(*c*) or Figs. 19(*b*) and 19(*d*). In general, the maximum values of σ_T are close to the same for all four cases. Within the flame, the highest levels of σ_T follow the high velocity shear zone that separates the central recirculation zone with the side recirculation zone. This is consistent with the velocity observations. In the velocity study, the highest values of σ_u correlated directly with the high velocity channel that was associated with the vortex flow. Past studies have suggested that a large standard

Downloaded 15 Mar 2010 to 129.137.90.23. Redistribution subject to ASME license or copyright; see http://www.asme.org/terms/Terms_Use.cfm

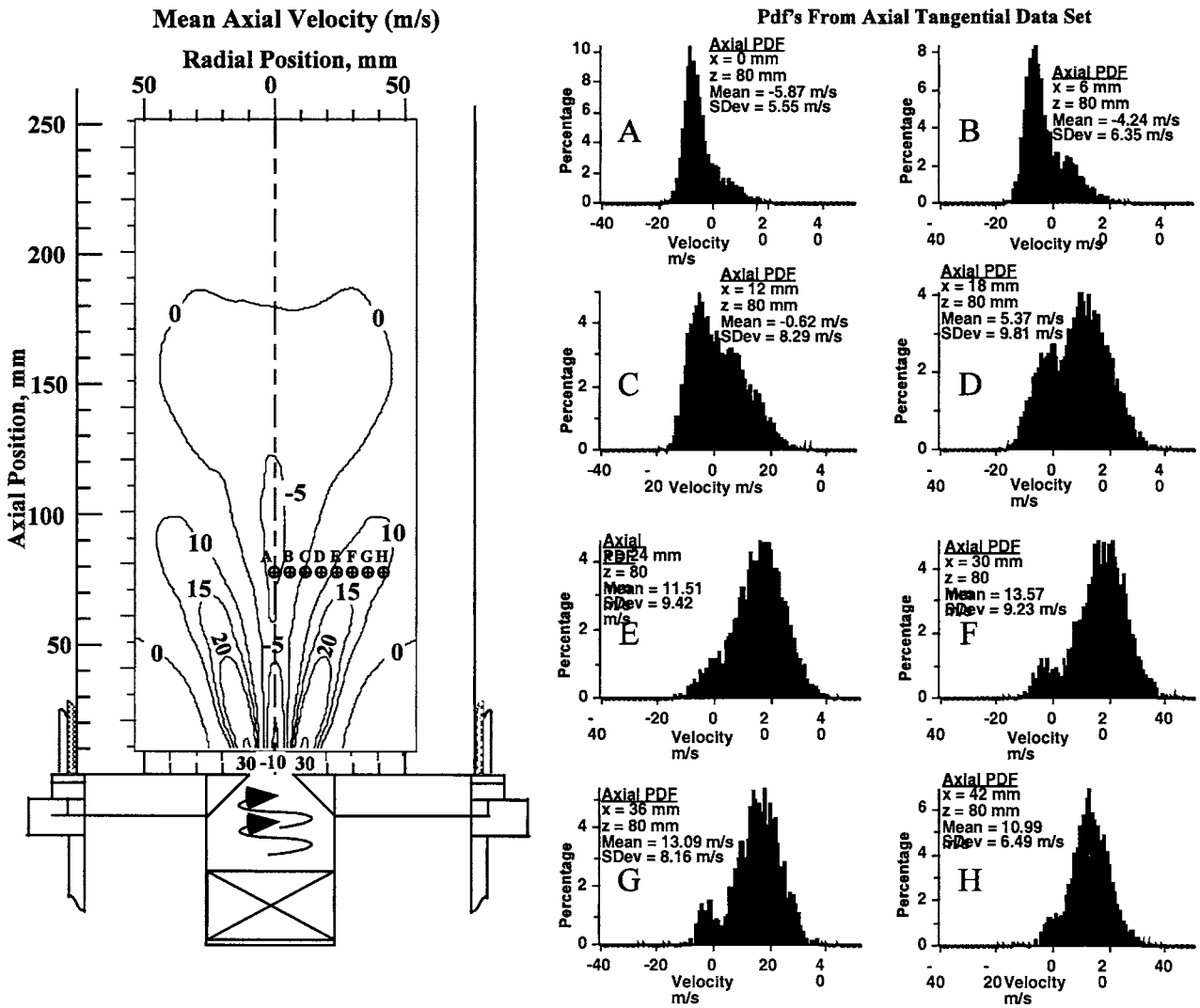

Fig. 15 Mean axial velocity contour map and example PDFs (MS injector, ϕ=0.65)

deviation correlated with high turbulence regions [8,11]. In this study, the largest values of σ_T occurred in the same location as the largest values of mean velocity.

The effect of stoichiometry on flame structure and stability can be obtained by comparing Figs. 19(*a*) and 19(*b*) or Figs. 19(*c*) and 19(*d*). In general, the higher heat release associated with the ϕ =0.80 cases resulted in (1) a reduction of the size of the highly fluctuating zone, and (2) a movement of that zone closer to the injector inlet.

Probability distribution functions (PDFs) have been used to de-

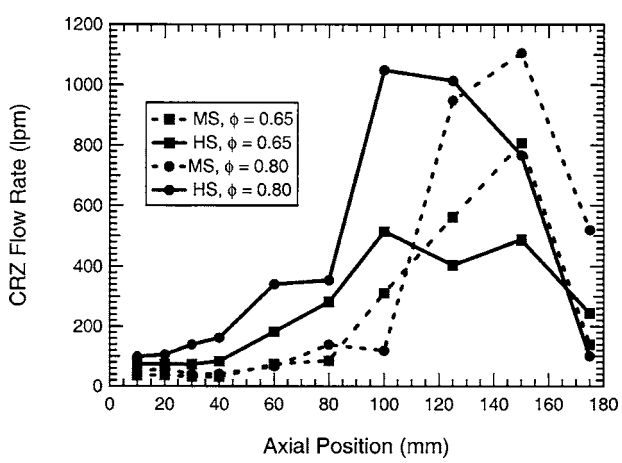

Fig. 16 Volumetric flow rates in the central recirculation zone, computed from axial velocities

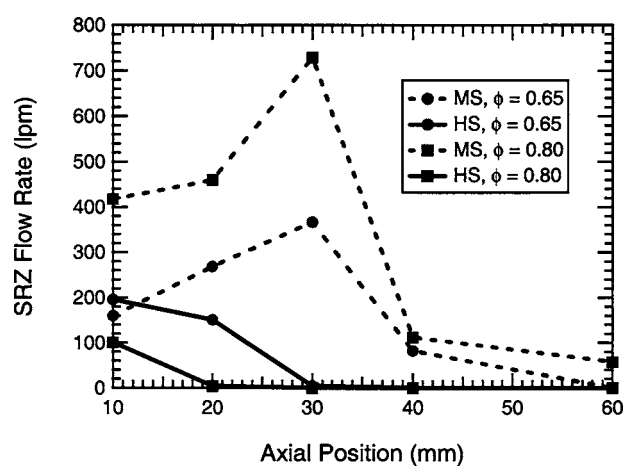

Fig. 17 Volumetric flow rates in the side recirculation zone, computed from axial velocities

Downloaded 15 Mar 2010 to 129.137.90.23. Redistribution subject to ASME license or copyright; see http://www.asme.org/terms/Terms_Use.cfm

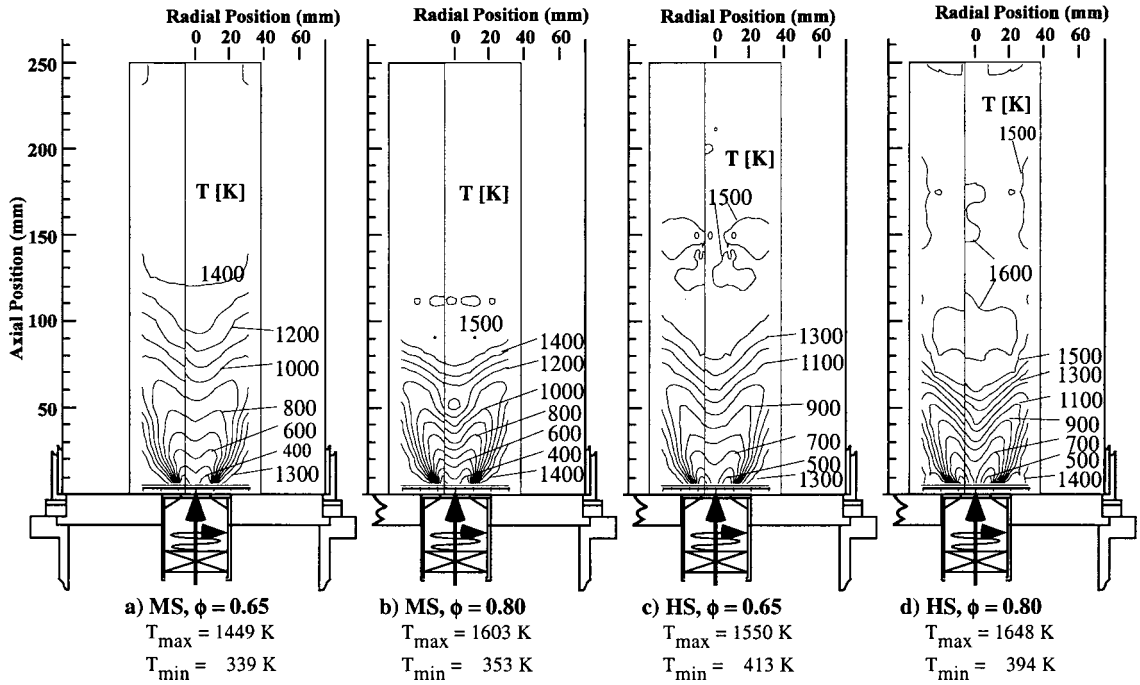

Fig. 18 Contour maps of mean gas temperatures for the four test conditions

scribe the characteristics of the fluctuating temperature. Figures 20 and 21 show examples of gas temperature PDFs at axial locations of 40, 60, and of 80 mm and radial positions from the centerline to a 30-mm radial location for the HS ϕ=0.80 and MS ϕ=0.65 cases. Additional PDF results are included in the dissertation by Flores [2]. Labeled on the PDF are the axial position radial position mean gas temperature (K) standard deviation temperature (K) and normalized standard deviation temperature, σ_T (%).

In Fig. 20, the PDFs generally do not exhibit a Gaussian distribution. The distributions in a single identifiable zone (i.e., in either the central recirculation zone or the side recirculation zone) seem to follow a Beta distribution. As with the velocity distributions, the distributions that bridged the two recirculation zones tended to have a bimodal PDF. Comparison of distributions E and F (40 mm) in Fig. 20 show that these two PDF distributions are clearly on opposite sides of the boundary between the central and side recirculation zones. At a higher position (80 mm), distributions M, N, and O all exhibit a wide distribution that has a bimodal character. This suggests that in the higher part of the flame there was a significant side to side fluctuation, even though the σ_T was not large, that shifted the side and central recirculation zones back and forth across the diagnostic locations.

Figure 21 presents similar PDF results for the HS ϕ=0.80 case.

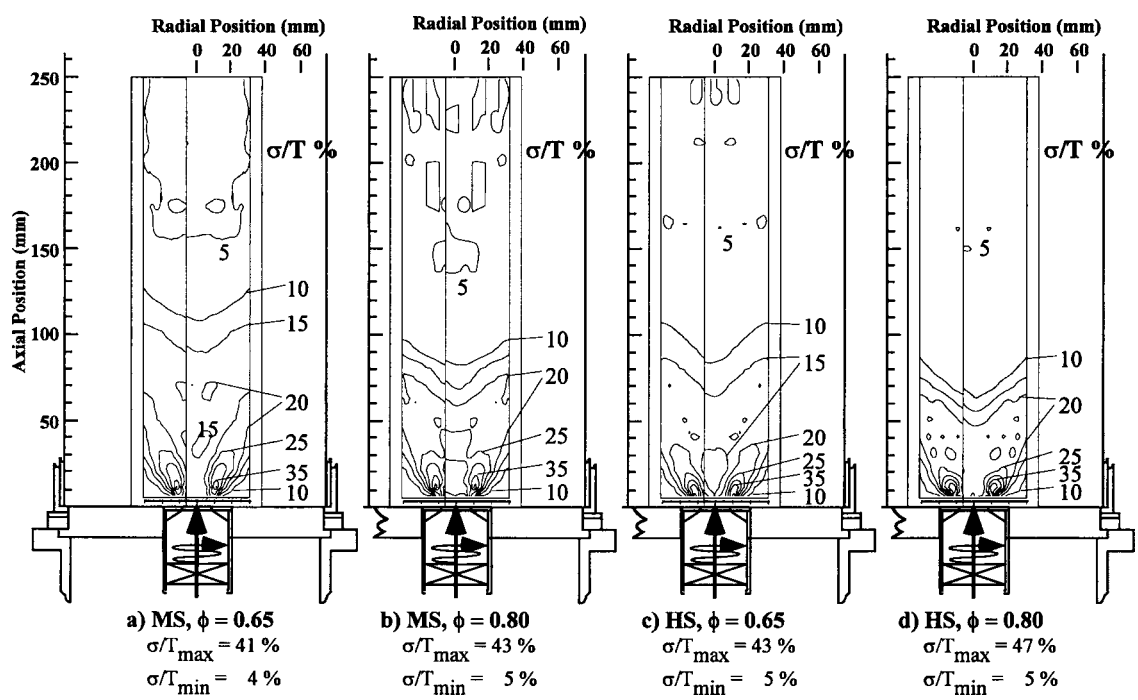

Fig. 19 Contour maps of normalized σ/T% for the four test conditions

Downloaded 15 Mar 2010 to 129.137.90.23. Redistribution subject to ASME license or copyright; see http://www.asme.org/terms/Terms_Use.cfm

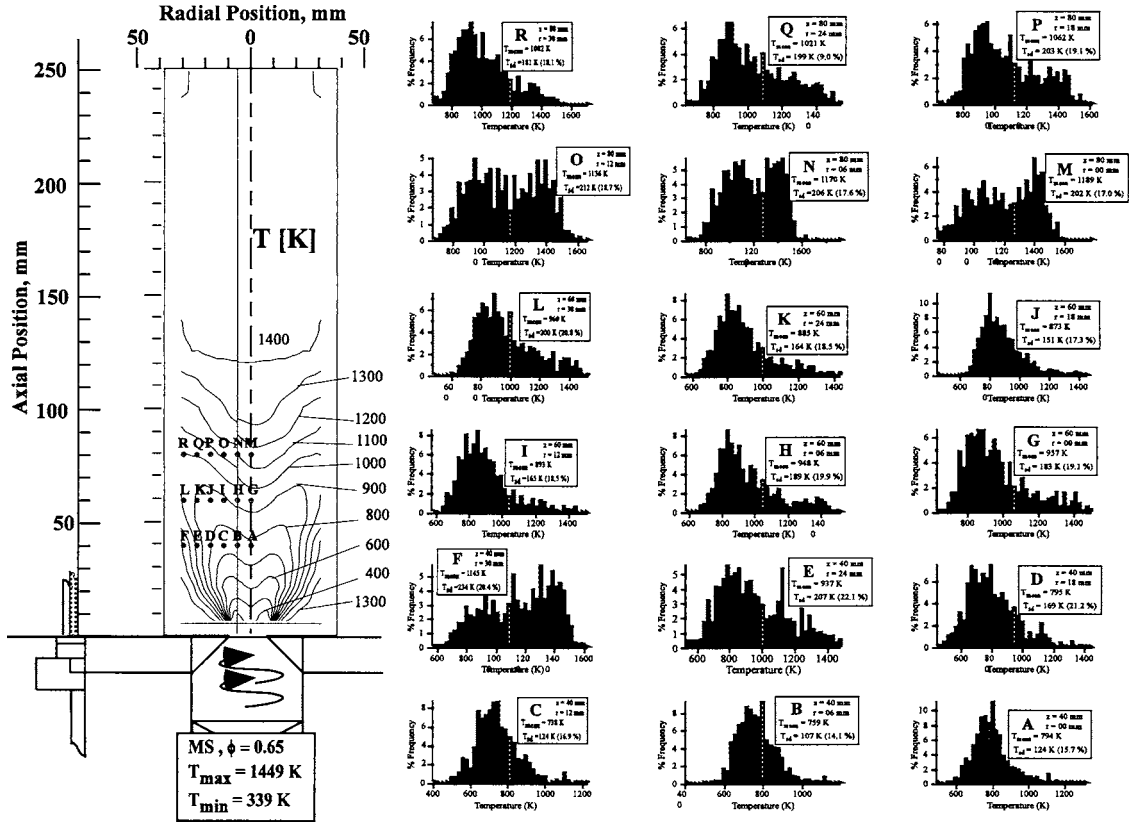

Fig. 20 Mean gas temperature contour map and example temperature PDFs (HS injector, ϕ=0.80)

Since the vortex is more coalesced near the injector for the HS ϕ=0.80 case, the bimodal character is easier to identify. Attention is drawn to locations A and B (z=40 mm) where there is a bimodal character to the PDF distribution even though these locations are near the centerline. Locations C, D, and E (also at 40 mm) reflect distributions in the high velocity region where cooler unreacted gases are being brought into the combustion chamber. Location F shows a bimodal character, but seems to be dominated by a higher temperature region associated with the side recirculation zone. The distributions at locations G, H, and I (z=60 mm) are dominated by a high-temperature zone associated with the central recirculation zone. However, at locations J, K, and L (also at 60 mm), the distributions have the bimodal character associated with components from both the central and side recirculation zones. Higher in the burner (z=80 mm) the distributions are nearly Gaussian in shape, and of nearly the same magnitude. This suggests that for this test condition, the combustion was nearly complete and near uniform flow had been achieved. In Fig. 20 at z=80 mm, the mean temperatures showed greater variation with radius, and were much below the final peak temperature in the burner. The location of the PDFs with bimodal distributions is shown in Fig. 22, showing that the bimodal distributions occur in the strong shear layers between the central and side recirculation zones.

Summary and Conclusion

A laboratory-scale gas turbine combustor (LSGTC) was used to reproduce the characteristics found in a modern annular gas turbine combustor. This laboratory scale gas turbine combustor was used to investigate the characteristics of a premixed natural gas/air flame using PLIF, LDA, and CARS at four operating conditions (two swirl conditions, HS and MS, and two equivalence ratios, ϕ=0.65 and 0.80). These data comprise one of the most complete characterizations of flames in lean premixed systems, and therefore present an important benchmark for testing computer models.

Data from all four types of measurements (video, PLIF, LDA, and CARS) showed that the least stable case was the MS ϕ=0.65 case, and that the most stable case was the HS ϕ=0.80 case. This was confirmed by heights of recirculation zones, location of OH, intensity of the OH measurements, PDF distributions of OH (showing the fraction of time when no OH was present), maximum temperatures, location of maximum temperatures, and standard deviations in OH and temperatures. The MS ϕ=0.65 flame would oscillate between two different flame structures, one that was more or less attached to the vortex funnel, and one that was lifted well above the vortex funnel. The MS case at ϕ=0.65 was at the very edge of the lean flammability limit, and would occasionally extinguish.

The variations in flame shapes were primarily a result of the effect of the swirl intensity and fuel equivalence ratio on the flow field, with the magnitude of the airflow rate being of secondary importance.

Probability density functions were generated at each measurement location for all three components of velocity, for OH intensity, and for temperatures. In general, PDF shapes were Gaussian in the downstream region after the main flame zone, were bimodal in the shear layer between the central and side recirculation zones, and followed a beta distribution inside the recirculation zones. The PDF plots show that there is a significant amount of time that no OH is detected in the most intense part of the flame zone. Likewise, significant levels of OH are seen even in regions that are predominately outside, but near the flame zone. The detector counts suggest that the maximum and average concentrations of OH for the MS, ϕ=0.65 case are about one fourth that of the HS, ϕ=0.80 case.

Boundaries of the recirculation zones were determined from the zero velocity contours, and the axial velocity was integrated radi-

Downloaded 15 Mar 2010 to 129.137.90.23. Redistribution subject to ASME license or copyright; see http://www.asme.org/terms/Terms_Use.cfm

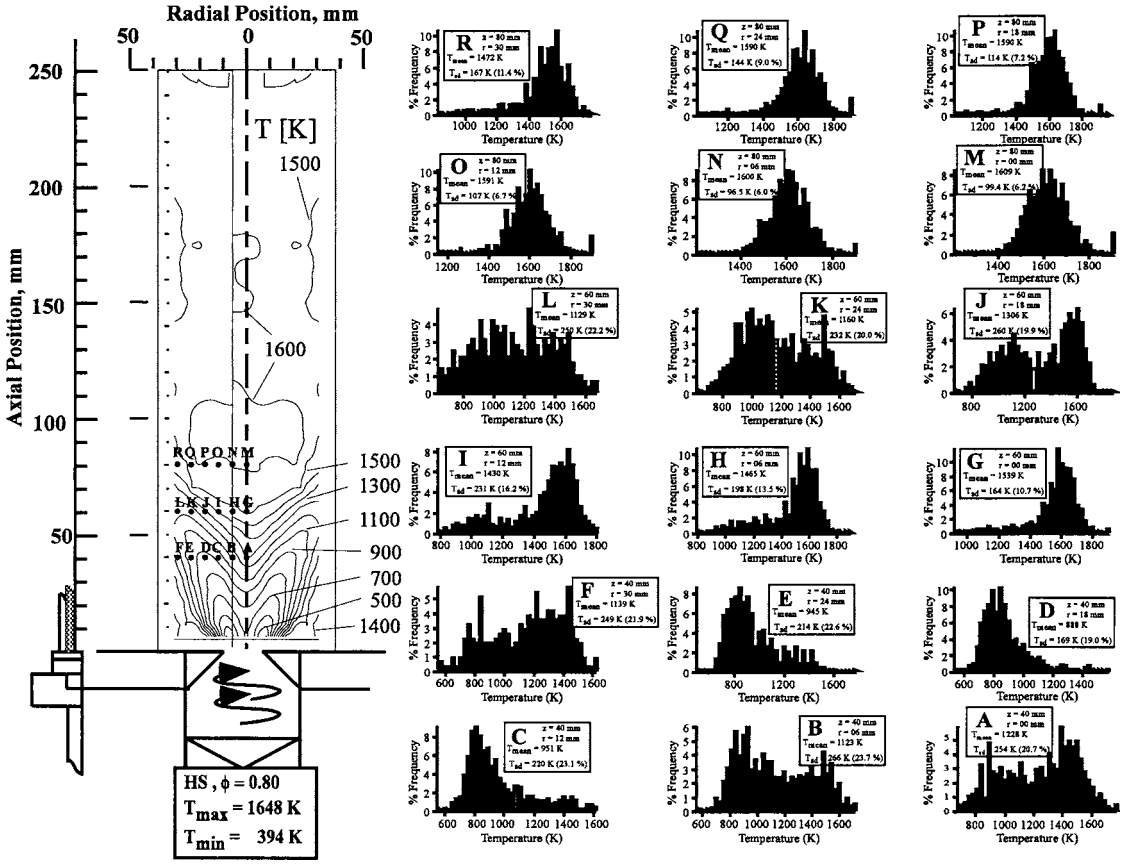

Fig. 21 Mean gas temperature contour map and example temperature PDFs (HS injector, ϕ=0.65)

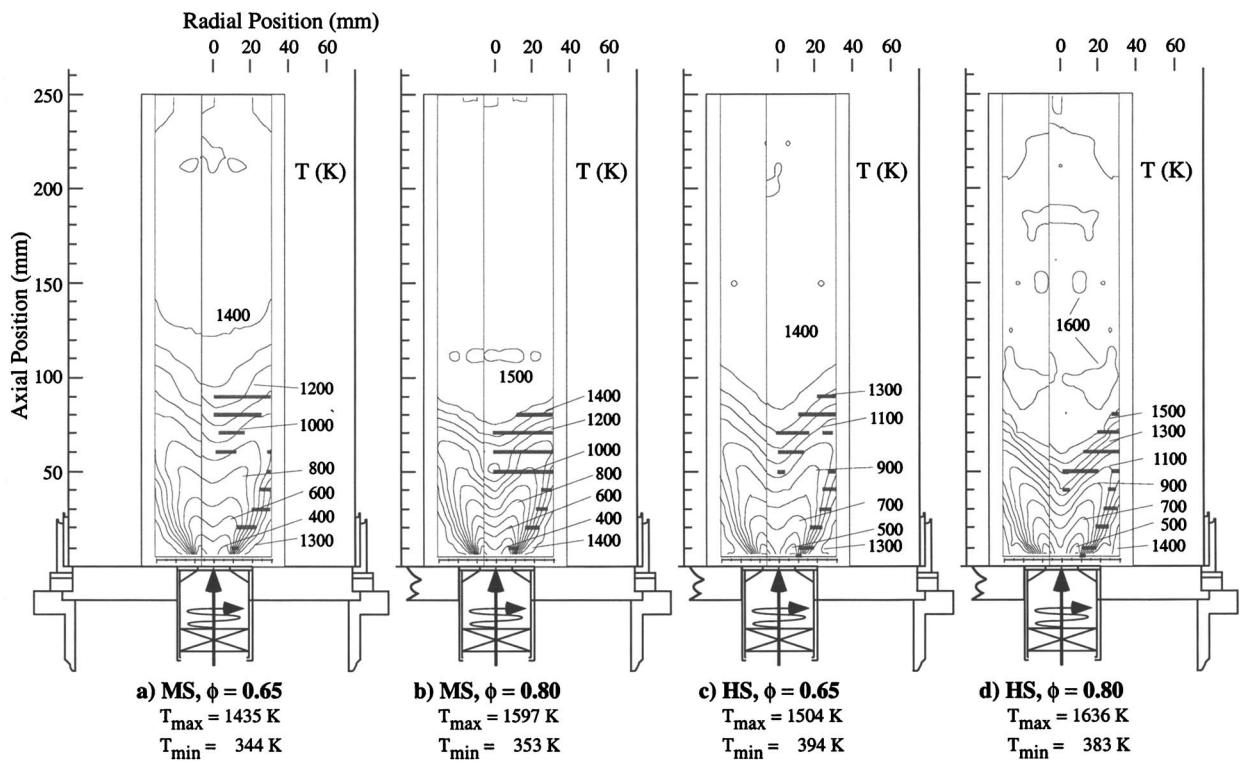

Fig. 22 Location of the bimodal distribution PDFs for all combustion cases, as indicated by horizontal lines

Downloaded 15 Mar 2010 to 129.137.90.23. Redistribution subject to ASME license or copyright; see http://www.asme.org/terms/Terms_Use.cfm

ally across the two zones to provide a volumetric flow rate in the reverse direction in each recirculation zone. This analysis showed that the flame stabilization was strongly influenced by the central recirculation zone for the HS ϕ=0.80 case, and by the side recirculation zone for the MS ϕ=0.65 case.

Acknowledgment

This paper presents results from a study that was funded in part by a U.S. Department of Energy's (DOE) Advanced Turbine Systems (ATS) program, with additional support by the Brigham Young University (BYU) Advanced Combustion Engineering Research Center (ACERC).

Nomenclature

CRZ = central recirculation zone
h = height
HS = HS condition
lpm = liters per minute
MS = MS condition
PDF = probability density function
Q = flow rate
r = radius
SN = swirl number
SRZ = side recirculation zone
w = width
ϕ = equivalence ratio

Subscripts

c = central (referring to central recirculation zone)
s = side (referring to side recirculation zone)
u = axial velocity
v = radial velocity
w = tangential velocity
x = horizontal distance from centerline
z = vertical distance from burner surface

References

[1] Murray, R. L., 1998, "Laser Doppler Anemometry Measurements in a Turbulent, Premixed, Natural Gas/Air Combustor," M.S. thesis, Chemical Engineering Department, Brigham Young University, Provo, UT.
[2] Flores, D. V., 2003, "Analysis of Lean Premixed Turbulent Combustion Using Coherent Anti-Stokes Raman Spectroscopy Temperature Measurements," Ph.D. dissertation, Chemical Engineering Department, Brigham Young University, Provo, UT.
[3] Cannon, S. M., Brewster, B. S., and Smoot, L. D., 1998, "Stochastic Modeling of CO and NO in Premixed Methane Combustion," Combust. Flame, **113**, pp. 135–146.
[4] Cannon, S. M., Brewster, B. S., and Smoot, L. D., 1999, "PDF Modeling of Lean Premixed Combustion Using In Situ Tabulated Chemistry," Combust. Flame, **119**, pp. 233–252.
[5] Mallampalli, H. P., Fletcher, T. H., and Chen, J. Y., 1998, "Evaluation of CH_4/NO_x Reduced Mechanisms Used for Modeling Lean Premixed Turbulent Combustion of Natural Gas," ASME J. Eng. Gas Turbines Power, **120**, pp. 703–712.
[6] Sturgess, G. J., Sloan, D. G., Lesmerises, A. L., Heneghan, S. P., and Ballal, D. R., 1992, "Design and Development of a Research Combustor for Lean Blowout Studies," ASME J. Eng. Gas Turbines Power, **114**, pp. 13–19.
[7] Hedman, P. O., Sturgess, G. J., Warren, D. L., Goss, L. P., and Shouse, D. T., 1995, "Observations of Flame Behavior from a Practical Fuel Injector Using Gaseous Fuel in a Technology Combustor," ASME J. Eng. Gas Turbines Power, **117**, pp. 441–452.
[8] Hedman, P. O., and Warren, D. L., 1995, "Turbulent Velocity and Temperature Measurements from a Gas-Fueled Technology Combustor with a Practical Fuel Injector," Combust. Flame, **100**, pp. 185–192.
[9] Warren, D. L., and Hedman, P. O., 1997, "Differential Mass and Energy Balances in the Flame Zone from a Practical Fuel Injector in a Technology Combustor," ASME J. Eng. Gas Turbines Power, **119**, pp. 352–361.
[10] Pyper, D. K., 1994, "The Study of Non-Swirl and Swirl Non-Premixed Flame Stability Near Lean Blow Out and the Design of a Research Combustion Facility," M.S. thesis, Mechanical Engineering Department, Brigham Young University, Provo, UT.
[11] Schmidt, S. E., and Hedman, P. O., 1995, "CARS Temperature and LDA Velocity Measurements in a Turbulent, Swirling, Premixed Propane/Air Fueled Model Gas Turbine Combustor," ASME Paper No. 95-GT-64.
[12] Roquemore, W. M., 1992, personal communication, Wright Laboratory, Wright Patterson Air Force Base, Dayton, OH.
[13] Gupta, A. K., D. G. Lilley, and N. Syred, 1994, *Swirl Flows*, Abacus Press, Kent, United Kingdom.
[14] Eckbreth, A. C., 1996, *Laser Diagnostics for Combustion Temperature and Species*, 2nd Ed., Gordon and Breach Publishers, Amsterdam, The Netherlands.
[15] Tait, N. P., and Greenhalgh, D. A., 1993, "PLIF Imaging of Fuel Fraction in Practical Devices and LH Imaging of Soot," Ber. Bunsenges. Phys. Chem., **97**(12), pp. 1619–1625.
[16] Campbell, R. P., Checkel, M. D., and Wilson, D. J., 1996, "Measurements of Time-Varying Jet Isopleths Using Dual Light Sheet PLIF," ASME Paper No. 96-GT-28.
[17] McDonell, V. G. and Samuelson, G. S., 2000, "Measurement of Fuel Mixing and Transport Processes in Gas Turbine Combustion," Meas. Sci. Technol., **11**, pp. 870–886.
[18] Thomsen, D. D., Ravikrishna, R. V., Cooper, C. S., Jiang, Y., and Laurendeau, N. M., 2001, "Concentration Measurements in a Mixing Module for Lean, Premixed, Gas-Turbine Combustors," J. Propul. Power, **17**, pp. 218–222.
[19] Cooper, C. S., and Larendeau, N. M., 2000, "Laser-Induced Fluorescence Measurements in Direct-Injection Spray Flames: Technique Development and Application," Meas. Sci. Technol., **11**, pp. 902–911.
[20] Broda, J. C., Seo, S., Santoro, R. J., Shirhattikar, G., and Yang, V., 1998, "An Experimental Study of Combustion Dynamics of a Premixed Swirl Injector," *Proceedings of the Combustion Institute*, **27**, pp. 1849–1856.
[21] Lee, S.-Y., Seo, S., Broda, J. C., Pal, S., and Santoro, R. J., 2000, "An Experimental Estimation of Mean Reaction Rate and Flame Structure During Combustion Instability in a Lean Premixed Gas Turbine Combustor," *Proceedings of the Combustion Institute*, **28**, pp. 775–782.
[22] Hicks, Y. R., Locke, R. J., and Anderson, R. C., 2000, "Optical Measurement and Visualization in High-Pressure, High-Temperature, Aviation Gas Turbine Combustors," Proc. SPIE **4076**, pp. 66–77.
[23] Birouk, M., and Gupta, A. K., 2001, "Structure of Lean Premixed Swirling Flames Using PLIF Imaging," J. Flow Visualization Image Process., **8**(4), pp. 341–353.
[24] Kobayashi, H, 2002, "Experimental Study of High-Pressure Turbulent Premixed Flames," Exp. Therm. Fluid Sci. **26**, pp. 375–387.
[25] Griebel, P., Scharen, R., Siewert, P., Bombach, R., Inauen, A., and Kreutner, W., 2003, "Flow Field and Structure of Turbulent High-Pressure Premixed Methane/Air Flames," ASME Paper No. GT-2003-38398.
[26] Hicks, Y. R., Locke, R. J., Anderson, R. C., Zaller, M., and Schock, H. J., 1998, "Imaging Fluorescent Combustion Species in Gas Turbine Flame Tubes: On Complexities in Real Systems," NASA Technical Memorandum No. 113157, 1074.
[27] Locke, R. J, Zaller, M. M., Hicks, Y. R., and Anderson, R. C., 1999, "Non-Intrusive Laser-Induced Imaging for Speciation and Patternation in High Pressure Gas Turbine Combustors," Proc. SPIE, **3783**, pp. 332–338.
[28] Hedman, P. O., Fletcher, T. H., Graham, S. G., Timothy, G. W., Flores, D. V., and Haslam, J. K., 2002, "Observations of Flame Behavior in a Laboratory-Scale Pre-Mixed Natural Gas/Air Gas Turbine Combustor from PLIF Measurements of OH," ASME Paper No. GT-2002-20052.
[29] Hedman, P. O., Murray, R. L., and Fletcher, T. H., 2002, "Observations of Flame Behavior in a Laboratory-Scale Pre-Mixed Natural Gas/Air Gas Turbine Combustor from LDA Velocity Measurements," ASME Paper No. GT-2002-20053.
[30] Laser Velocimetry Systems, 1990, TSI Inc., St. Paul, MN.
[31] *Find Software*, 1996, TSI Inc., St. Paul, MN.
[32] Boyack, K. W., and Hedman, P. O., 1990, "Dual-Stokes CARS System for Simultaneous Measurement of Temperature and Multiple Species in Turbulent Flames," *Twenty-Third Symposium (International) on Combustion*, The Combustion Institute, Pittsburgh, PA.
[33] Boyack, K. W., 1990, "A Study of Turbulent Nonpremixed Jet Flames of CO/N_2 Using Coherent Anti-Stokes Raman Spectroscopy," Ph.D. dissertation, Chemical Engineering Department, Brigham Young University, Provo, UT.
[34] Haslam, J. K., and Hedman, P. O., 1996, "The Use of Two Pyromethene Dyes in a Single Stokes Dye Laser to Make CARS Temperature and Multiple Species (CO, CO_2, O_2, and N_2) Concentration Measurements," Paper No. WSS/CI 96F-086, Fall Meeting of the Western States Section of the Combustion Institute, The University of Southern California, Los Angeles, CA, October 28-29.
[35] Dawson, R. W., and Hedman, P. O., 1996, "A Technique for Determining Instantaneous N_2, CO, O_2, CO_2, and H_2O Species Concentrations Using Multiplex CARS in Premixed Gaseous Flames," Paper No. WSS/CI 96F-087, Fall Meeting of the Western States Section of the Combustion Institute, The University of Southern California, Los Angeles, CA, October 28-29.
[36] Hedman, P. O., Flores, D. V., and Fletcher, T. H., 2002, "Observations of Flame Behavior in a Laboratory-Scale Pre-Mixed Natural Gas/Air Gas Turbine Combustor from CARS Temperature Measurements," ASME Paper No. GT-2002-20054.
[37] Eckbreth, A. C., 1985, personal communication.
[38] Palmer, R. E., 1989, "The CARSFT Computer Code for Calculating Coherent Anti-Stokes Raman Spectra: User and Programmer Information," Sandia Report No. SAND89-8206, Sandia National Laboratories, Livermore, CA.

Downloaded 15 Mar 2010 to 129.137.90.23. Redistribution subject to ASME license or copyright; see http://www.asme.org/terms/Terms_Use.cfm