GE Global Research

Impact of Secondary Air Flow On Combustor Emissions

Bassam Abdelnabi, Keith Mcmanus and Brian Volk

2019GRC0325, December

Public

Technical Information Series

Copyright© 2019 General Electric.
Contents approved as Public Information

GE Global Research

Technical Report Abstract Page

Title: Impact of Secondary Air Flow on Combustor Emissions

Author(s): Bassam Abdelnabi **SSO** 200019195
Keith Mcmanus 200005585
Brian Volk 200019272

Component: CORP GR-Thermosciences ,US

Report Number: 2019GRC0325 **Date** December

Number of Page 10 **Classification** Public

Key Words: NOx emissions, NOx design curve, secondary air, combustor air redistribution, DLE, DLN

Abstract: It is a common practice to relate emissions performance of Dry Low Emissions (DLE) combustion systems to the flame temperature that is estimated from the mass flows of air and fuel flowing through the premixer. In many combustion systems, the exit temperature (or turbine nozzle inlet temperature) is quite low and is not a good parameter for estimating combustion emissions. The difference between the combustion flame temperature and exit temperature is mainly due to secondary air dilution. To our knowledge there are no detailed published data that quantify the impact of this temperature difference on combustion emissions. The target of this study is to quantify the impact of secondary air variation on emissions, both globally and locally. High pressure experiments are conducted at H class gas turbine operating conditions using a DLE combustion system. In the context this DLE system, secondary air refers to cooling and leakage flows because direct air dilution of the combustion gasses is not necessary. This is because the flame stabilized downstream of the premixer is well mixed and fuel-lean. With NOx requirements moving toward single digit (ppm) levels, it becomes essential to accurately quantify the impact of reducing the secondary air percentage on emissions performance. In addition to the need to carefully study the impact of local interaction of the secondary air with the flame. The combustion system is configured with two independently controlled mixers along with a variable secondary air circuit that can change the secondary air fraction from 14 to 8%. Multiple emissions rakes are used at the combustor exit to delineate the interaction and relate it to the flame structure. The system is configured to enable sampling from individual rakes to study local emissions and the rakes can be ganged together to measure the bulk-averaged combustion emissions.

This research provides a quantification of the improvement of the NOx margin with a decrease in the secondary air percentage. The study shows that the increase in margin is not a simple re-estimate of the combustor emissions using the NOx design curve due to flame quenching effects. The results also show that the secondary air can be used to improve the NOx emissions via controlling the interaction with the primary flame. The impact is quantified in terms of emissions, acoustics and metal temperatures.

IMPACT OF SECONDARY AIR FLOW ON COMBUSTOR EMISSIONS

Bassam S. Mohammad, Brian Volk and Keith McManus
General Electric Global Research Center
Niskayuna, NY 12309, USA

ABSTRACT

It is a common practice to relate emissions performance of Dry Low Emissions (DLE) combustion systems to the flame temperature that is estimated from the mass flows of air and fuel flowing through the premixer. In many combustion systems, the exit temperature (or turbine nozzle inlet temperature) is quite low and is not a good parameter for estimating combustion emissions. The difference between the combustion flame temperature and exit temperature is mainly due to secondary air dilution. To our knowledge there are no detailed published data that quantify the impact of this temperature difference on combustion emissions. The target of this study is to quantify the impact of secondary air variation on emissions, both globally and locally. High pressure experiments are conducted at H class gas turbine operating conditions using a DLE combustion system. In the context this DLE system, secondary air refers to cooling and leakage flows because direct air dilution of the combustion gasses is not necessary. This is because the flame stabilized downstream of the premixer is well mixed and fuel-lean. With NOx requirements moving toward single digit (ppm) levels, it becomes essential to accurately quantify the impact of reducing the secondary air percentage on emissions performance. In addition to the need to carefully study the impact of local interaction of the secondary air with the flame. The combustion system is configured with two independently controlled mixers along with a variable secondary air circuit that can change the secondary air fraction from 14 to 8%. Multiple emissions rakes are used at the combustor exit to delineate the interaction and relate it to the flame structure. The system is configured to enable sampling from individual rakes to study local emissions and the rakes can be ganged together to measure the bulk-averaged combustion emissions. This research provides a quantification of the improvement of the NOx margin with a decrease in the secondary air percentage. The study shows that the increase in margin is not a simple re-estimate of the combustor emissions using the NOx design curve due to flame quenching effects. The results also show that the secondary air can be used to improve the NOx emissions via controlling the interaction with the primary flame. The impact is quantified in terms of emissions, acoustics and metal temperatures.

1 INTRODUCTION

Emissions reduction has been the main driver for gas turbine combustion system development for decades. The Dry Low Emissions (DLE) or Dry Low NOx systems (DLN) have been introduced for about 30 years now. They successfully drove the NOx emissions reduction from hundreds of ppm to less than 25 ppm (operation on gas). Today several Original Equipment Manufacturers (OEM) offer products that achieve better than 15 ppm NOx levels. However, the increase in efficiency requirements calls for an increase in the firing temperature and pressure which tend to drive NOx higher. The combustion community has reached maturity in understanding NOx generation and control using advanced fuel injection and mixing devices. The philosophy is simple and relies on designing fuel-air mixing devices that provide perfect homogeneous mixtures. On the other hand, combustion emissions are also sensitive to operating conditions and the overall combustor configuration. More research is required to provide better understanding of the influence of these factors on combustor operability and emission performance.

Several parameters influence the combustion emissions. NOx and CO are sensitive to flame temperature, operating pressure, residence time, fuel composition and mixing quality (controlled by premixer performance). There are interactions between all of these parameters so quantifying the impact of each separately is not straight forward. Most of this paper will be focused on NOx emissions as it is the dominant component formed at high pressure and temperature.

Flame temperature is the major driver for NOx emissions. The NOx design curve is the typical tool used to quantify the impact of flame temperature on NOx emissions. The curve is simply the amount of NOx generated as a function of flame temperature. The combustion designer develops a specific mixer and then evaluates the performance and collects data to generate this curve. However, this curve is dependent on many parameters. Essentially a different curve exists at different operating conditions (combustor pressure, P3, and exit temperature T4), flame distribution, residence time, fuel type, oxidizer type and diffusion portion of the flame (if it exists).

In an attempt to define the lowest possible emissions at a given flame temperature or the best NOx design curve, the concept of entitlement was introduced in the 1990's by the pioneering work of Leonard and Correa [1]. They ran a simple jet flame-based system under perfectly premixed conditions and quantified the corresponding emissions. This concept was revived by Elkady et. al [2] and they extended the data collected to other operating condition. In addition, they validated several kinetics models against it to specify the best models for NOx simulation using reactor network modelling. The same combustor architecture (with different variations) was used for several emissions related studies. Mohammad et. al used it to show that flame oscillations can drive higher NOx emissions even for the entitlement data [3]. It was also used by Elkady et.

al to quantify the reduction in NOx emissions corresponding to 40% exhaust gas recirculation (EGR)[4]. The rig data was also used for successful CO modeling close to lean blow out (LBO) [5, 6].

Several authors documented the impact of pressure on combustion emissions [1, 7-9]. It is a complex effect that depends on the flame temperature and degree of mixedness. This does not mean that the pressure effect only depends on these two parameters. It just means this is what is available in published literature. The higher the flame temperature the higher the NOx emissions penalty at elevated pressure. CO decreases with pressure. Residence time effect on NOx emissions is documented in few publications, but was not thoroughly studied in a way that provides combustor designers to make the best selection based on target cycle conditions [2, 10, 11]. However, these publications still provide useful quantification for the impact of residence time on emissions. As the residence time increases the NOx increase, but growth rate is dependent on flame temperature. It also depends on the diffusion portion of the flame. The authors are not aware of any existing thorough published research that documents the effect of residence time on CO. The literature is lacking guidance or quantification of the impact of cooling flow on combustion emissions.

Combustion system cooling is essential to protect the combustor parts from failure. This cooling air interacts with the flame and may have an emissions impact. The percentage of air used for cooling the combustor is a function of the cycle conditions and flame temperature. It is also dependent on the advent in heat transfer technologies, developments of advanced coatings and thermally capable materials. There is no published data that quantifies the impact of the change in cooling air percentage on combustion emissions. Marosky et. al provided a rare study on the interaction of the cooling air with the main air [12]. They showed that the air strongly interacts with the flame and caused dilution and fluctuations to the equivalence ratio which may lead to combustion instabilities. However, they did isothermal experiments using water flow and hence did not study the impact on emissions.

This paper describes a study of the impact of cooling air (referred to below as secondary air) on combustion emissions for a DLE combustion system operating at H class gas turbine conditions. The primary air term in this paper refers to the air flowing through the premixer only. The combustor used in this study features two premixers that are mounted side-by-side. The system is configured to enable variation of the secondary air from 14% to 8%. The data is collected at variable flame temperatures as well as with a side-to-side temperature bias to more thoroughly quantify the effect on emissions. Instrumentation at the combustor inlet and exit are used not only to quantify the effect of secondary air on emissions, but to delineate the extent of flame interaction. Also, the instrumentation are used to provide a possible strategy to tailor the secondary air distribution to reduce NOx levels.

2 NOMENCLATURE

P_3 = Combustor feed pressure
T_3 = Combustor inlet air and fuel temperature
TC = Thermocouple
$\Delta P/P$ = Operating pressure drop across nozzle
NO_x = Nitric Oxides
CO = Carbon Monoxide
O_2 = Oxygen
CO_2 = Carbon Dioxide
H_2 = Hydrogen
ppmvd = Particle per million volume dry
T_{flame} = Flame temperature-based mixer only air
T_{Exit} = Combustor exit temperature
ms = combustor residence time in millisecond
p' = Thermo-acoustic instabilities pressure fluctuation in psi
pk-pk = Pressure fluctuations peak to peak
TKHS = Thermocouple placed on the heat shield
DLE = Dry Low Emissions combustion systems
EPA = Environmental protection agency
Secondary Air = All air flowing inside the combustor less the mixers air
Variable Secondary Air = The portion of the secondary air that is controlled and varied
GER = General Electric Research

3 EXPERIMENTAL SETUP AND TEST CONDITIONS:

3.1 Test facility capability

The General Electric Research (GER) combustion facility is highly capable for developing and evaluating advanced combustor component technologies. The facility is composed of multiple test cells where each provides a unique capability corresponding to a specific problem of interest. Multiple fuel and air delivery systems are available that supply combustor inlet flows consistent with those found in actual turbine engines, including heavy duty, aeroderivative and aircraft engines, operating at full power.

3.2 Test cell capability

This study was conducted in a combustion test cell with extensive capability (see Figure 1). The test cell can supply multiple gas fuel circuits, multiple liquid fuel circuits, multiple air circuits, and different types of gaseous fuels and gas fuel blends. It is equipped with a fuel heater to control the gaseous fuel temperature to the desired value. There are two different ways of supplying fuel blends of interest: a specific fuel blend prepared in a blowdown reservoir; or via online blending in the test cell. This blending capability is often required to assess the flex fuel capability of different combustion technologies. This is in addition to the ability of using water injection for emissions control via a liquid fuel water emulsion or direct water injection through dedicated water injection circuit. The cell is configured to enable sampling from individual emissions rakes as well as ganging the emissions to provide an area weighted average of the emissions at the combustor exit.

3.3 Problem definition and combustor design

The target of this research is to study the impact of secondary air on emissions, both locally and globally. In the context of this study, primary air is only the portion of the air running through the DLE mixers. The secondary air refers to all other air streams flowing into the combustor. Typically, the secondary air streams include heat shield cooling, dome cooling, leakage flows, and liner cooling flows. The secondary air in this specific problem is composed of mainly two parts. The first part is the dome and leakages air which forms around 8 % of the combustor flow. This portion is fixed and not varied through the experiment. The second part is variable and is varied in this study roughly from 0 to 6% (zero corresponds to 8 % secondary flow and 6% corresponds to 14% secondary flow).

Based on the problem under investigation, two DLE mixers are required to help study the local effects as will be discussed shortly. Also, two air streams are needed. The main air stream will be feeding the combustor directly and the second will be used as a source for the variable secondary air. Both air streams are metered and controlled. The combustor layout is given in Figure 2. The variable secondary air injection is located toward the outer mixer at roughly 25% of the combustor length (relative to the front end) as shown in Figure 2.

The variable secondary air injector is inserted to the combustor through a ferrule that is designed to enable flexible mounting as well as to provide a leeway for thermal expansion without interference with the combustor walls as the systems operates at high-pressure and -temperature. This is of extreme importance because the thermal expansion can drive geometrical variations resulting in interference between parts and eventually hardware failure. A hydrogen torch is inserted through the opposite wall to provide an ignition source for the combustor. It is also inserted through a ferrule assembly to allow for thermal expansion.

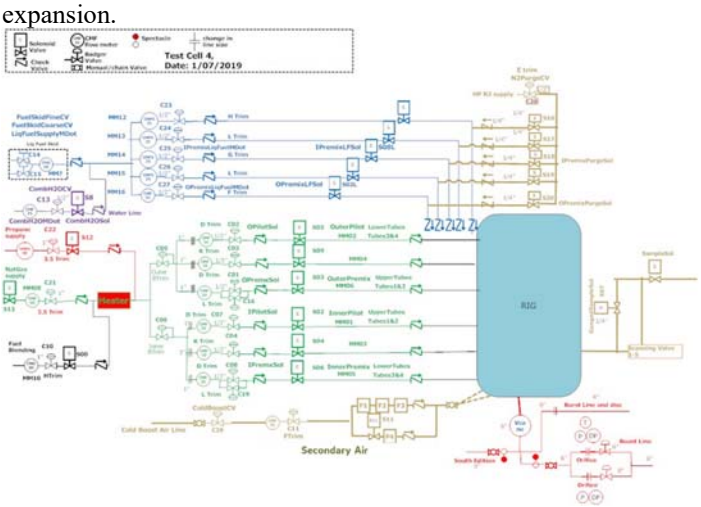

Figure 1. Test cell 4 layout and capabilities

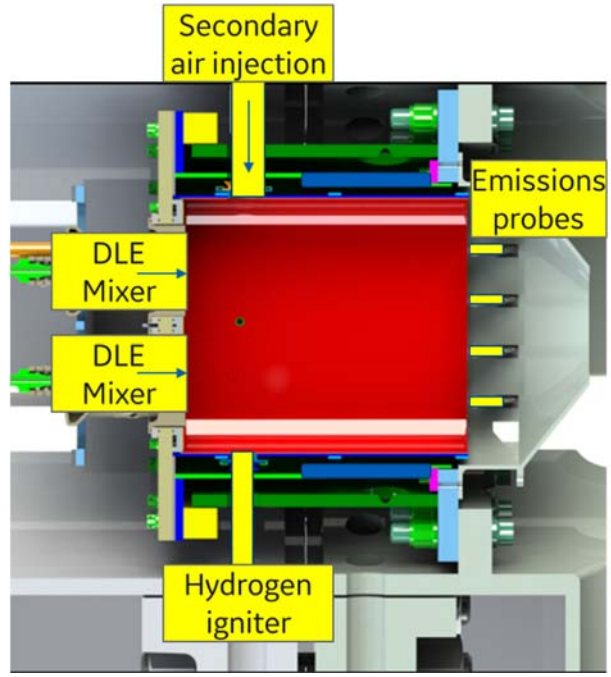

Figure 2. Combustion system components and design

The flow path of the combustor assembly is given in Figure 3. There are two pressure measurements ports for monitoring the static and dynamic pressure. They are in the same plane of the igniter and secondary air injection point. A flow sleeve surrounds the liner for cooling air to cool the walls from the backside. Emissions rakes are located at the exit for emissions sampling as will be discussed in detail below. There are two emissions rakes aligned with each mixer to help identify and clearly define the interaction between the cooling air and different flame structures. Also, they will help explore the impact of the flame temperature bias. These are key characteristics that will be evaluated in this study.

3.4 Combustor instrumentation

Combustor development and validation is a complex process that requires high-accuracy. Test quality is ensured via closures of metered air, fuel, emissions, temperatures and pressures. The combustor under investigation is instrumented both internally and externally to ensure integrity and safe test execution. There are four static pressure measurements ports as illustrated in Figure 4. They are used to determine the pressure drop and hence facilitate the estimation of air flowing through the mixers. Two of the four ports are used also for dynamics pressure monitoring which is a critical measurement for DLE combustion systems. Also, there are 3 pressure measurement points at the inlet of the combustor that are used to monitor the operating pressure (P3). This test is conducted at an operating pressure of 22.1 atm.

It was mentioned earlier that it is important to be able to study the extent of interaction between the secondary air and combustion air. Therefore, the relative location of the inlet flows and instrumentation is important. Figure 4 shows the inlet location of the secondary air and Figure 2 shows that it is located downstream from the dome (at 25% of the combustor axial length). The dome is the structure shown in Figure 4 and it is essentially the structure that forms the front end of the combustor and through which the mixers are installed. The dome structure is cooled using a portion of the incoming air to maintain acceptable metal temperature values. Typically, this air is split from the compressor air feeding the combustor which is at T3, the air preheat temperature (784 K).

Thermocouple instrumentation (TC's) that measure heat shield temperatures are a very important part of this study. They will be used along with the local emissions data to provide insight on the extent of interaction of the secondary air and the main flames. There are four thermocouples that are strategically located as shown in Figure 4. TKHSA1 is located at the same side of the combustor corresponding to the secondary air injection. However, it is located on the dome which is not in the same axial plane of the injection point. The response of this TC can indicate if the secondary air recirculates back to the dome through the combustor flow reversal zones. TKHSA2 is located at the center of the outer mixer. TKHSB1 is located at the midpoint of the combustor and TKHSB2 is located all the way at the opposite corner. These TC's are brazed in position to ensure perfect representation of the metal temperature being measured as well as to prolong the TC life which is typically influenced by combustion dynamics and vibration.

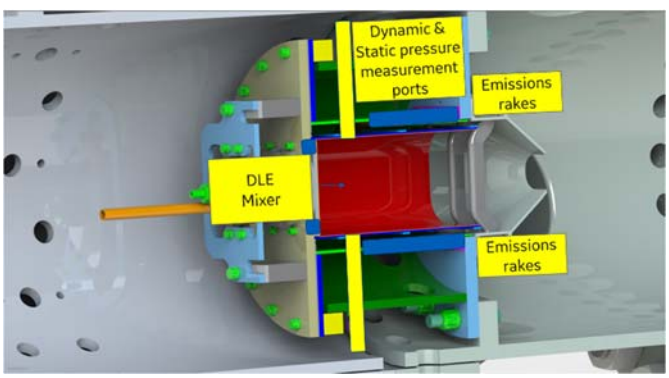

Figure 3. Flow path and pressure measurement point

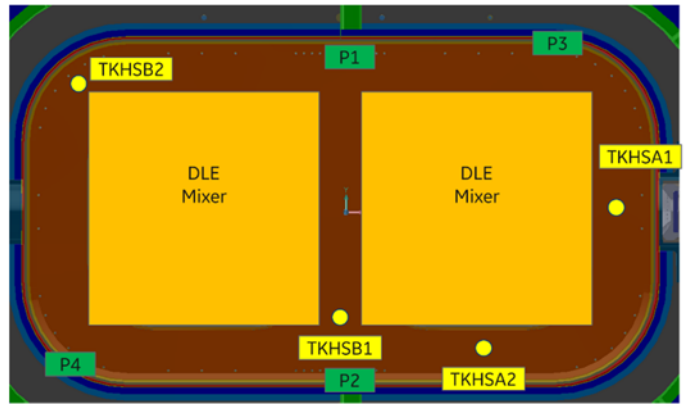

Figure 4. Instrumentation diagram (location of Thermocouples and pressure ports)

3.5 Emissions sampling system

The emissions sampling system is an integral part of this study. The system is illustrated in Figure 5. The four emissions rakes are strategically located such that each two are facing one mixer. Rake 1 is the closest to the secondary air injection and 4 is the furthest. This arrangement enables local study of the extent of penetration and interaction between the secondary air and the mixer flames. The rakes are water cooled to ensure survivability in the hot combustion products. Each rake can be used independently by sampling through a scanning valve. Only four channels are used in this case and each corresponds to a single emissions rake. Also, the four sampling lines are can be ganged together to provide an area weighted average of the combustion emissions at the combustor exit. Overall there are 20 sampling ports distributed over the combustor exit as there are 5 sampling holes per emissions rake. Two shutoff solenoids make it possible to sample in ganged mode or in a single channel mode as illustrated in Figure 5.

The collected emissions sample is then transferred to a heated filter and eventually to the emissions stand. The sample flows through an electrically heated hose that help maintain the sample temperature at 422K. This temperature ensures no condensation of the water in the sample gas will occur before feeding the sample to the analyzer. This is important as NO2 is water soluble. If water condensation occurs, then NO2 may be lost and hence the total NOx measured will be in error. This is a very serious and frequent problem in emissions sampling systems. Most standard NOx analyzers are chemiluminescence based analyzers which do not measure NO2 directly. They use an internal converter that converts NO2 to NO and then measure the total NO. This converter deteriorates with time and needs to be continuously monitored for the decline of the conversion efficiency. The Environmental Protection Agency (EPA) method 7E is of extreme importance to be referred to by researchers and industrial entities performing emissions sampling [13]

The emissions stand is composed of a series of analyzers that are used to measure all major components of the sampled gas stream. Mainly we are interested in oxygen (O2), nitric oxides (NOx), carbon monoxide (CO), unburned hydro carbons

(UHC), methane (CH4) and carbo dioxide (CO2). NOx 15 refers to the standard correction of the NOx emissions to 15% oxygen. The same terminology applies for CO.

3.6 Operating conditions, data storage and reporting

Data collection and combustion operation for this study is conducted at representative H class gas turbine operating conditions. The combustor pressure (P3) is ~22.1 atm, pressure drop through the mixers is maintained at 3.5% relative to P3, air preheat temperature (T3) is 785K. Residence time is ~ 13.5 ms which represents an average size combustion system. The variable secondary air is provided at an unheated temperature of ~310K and enables the study of the interaction between the secondary air injection and the main flames. The fixed secondary air portions (dome, heatshield and leakages) is also provided at T3. Therefore, the finger print of the secondary air and its interaction with the dome (though it is injected downstream) can be tracked since it is supplied at much colder temperature as will be discussed shortly. However, the test was repeated with a heated secondary air stream (at 588.7K) to confirm that the reported impact is minimally influenced by the temperature difference.

All data is recorded at a rate of 1 data point per second. The data presented here is collected at steady state. Each point is an average of 60 instantaneous data points. This minimizes standard deviation and significantly improves the accuracy of the reported average.

4 RESULTS AND DISCUSSION

4.1 Effect of secondary air flowrate on emissions performance

Figure 6 shows the NOx emissions of this combustion systems at the baseline case with 14 % secondary air as well as cases with 11% and 8%, respectively. The emissions are presented as a function of TFlame. Figure 7 shows a plot of the same data set vs the combustor exit temperature (TExit). The curves may be seen to provide contradictory conclusions. Figure 6 shows emissions increase with the decrease of the secondary air while Figure 7 shows the opposite. Figure 8 can help explain why they appear contradictory. At a fixed combustor exit temperature the reduction of secondary air calls for reduction in the flame temperature since less fuel is needed to maintain the same exit temperature. Let us explain this in detail.

The combustor can be thought of as a black box. The overall air and fuel always have to be the same for a fixed engine operating condition. Combustors are designed to receive a certain amount of air from the turbomachinery and burn a certain amount of fuel to provide power. The combustor is a hot gas generator that delivers a prescribed TExit (which is the inlet temperature to the first stage turbine nozzle). This is the view point that will be focused on in this study. Therefore, Figure 7 is the proper way to characterize this problem.

Running a lab test is different from an engine test. In an engine, the air will always redistribute (as we discussed previously), but in a lab test the system components are independent and really nothing can force the system to use the same air, burn the same fuel or maintain the same exit temperature. In an engine, the compressor, combustor and turbine are all one system. On the other hand, the compressor, air heater and the combustor in the lab are all independent systems (there is no turbine). In lab test, the test is designed to mimic a specific problem. The reader will notice that we ran the combustor under multiple firing temperatures and while changing the exit and flame temperature as well. This is not possible in an engine test. Therefore, the data presented should be clear about what was varied and what was help constant.

The problem presented here represents an existing combustion system that will be redesigned by reducing the secondary air used for cooling and feeding it to the mixer. This type of study is typically driven by the advent in coatings, materials and cooling mechanisms such that the secondary cooling air percent can be efficiently cut down without impact on durability. In this study we are presenting three cases. The baseline case corresponds to the starting point where the combustion system is running at 14% secondary air. The second and third case correspond to a reduction of 3% and 6% in the cooling air respectively.

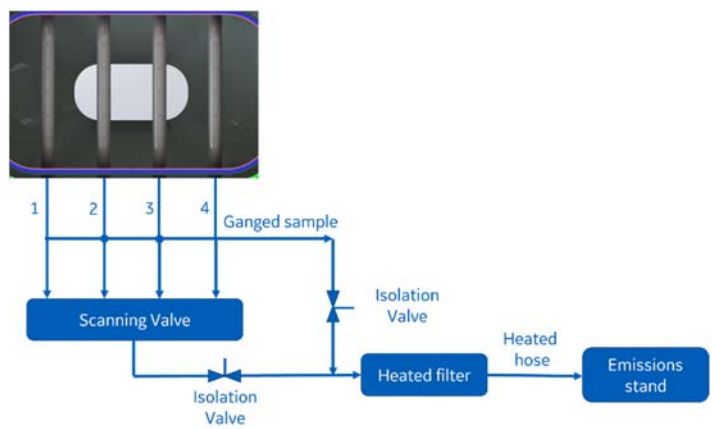

Figure 5. sampling system

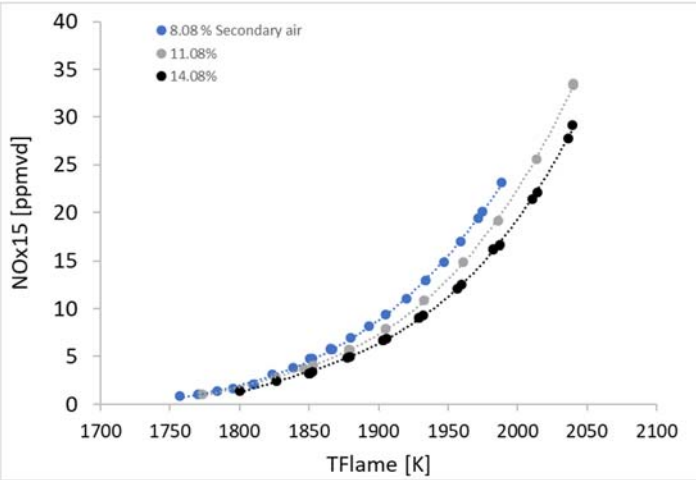

Figure 6. NOx emissions vs TFlame with variable secondary air

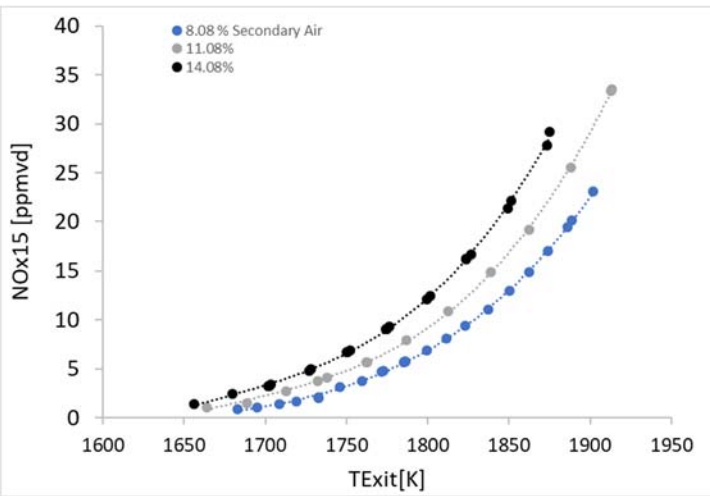

Figure 7. NOx emissions vs TExit with variable secondary air

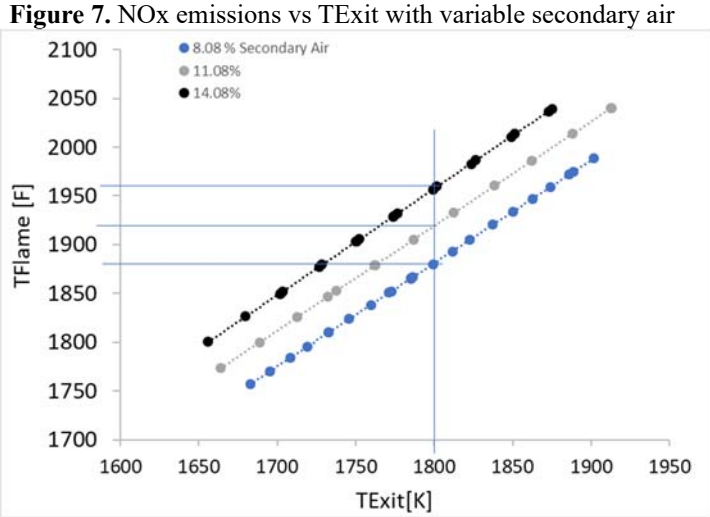

Figure 8. TFlame vs. TExit

Using the data from Figure 7, the NOx reduction associated with the reduction in secondary air at various flame temperatures can be estimated. Figure 9 shows a plot corresponding to a 6% reduction in cooling air. Assuming that this reduction is linear then emissions reduction corresponding to 3.16% cooling flow reduction can be predicted. Now both the linear prediction and the measured data at 3.16% reduction can be compared as shown in Figure 9. It appears that the linear approximation is an excellent approximation at TExit higher than 1800K. The deviation from linear behavior increases in the low temperature range. Nevertheless, the low temperature range is characterized with low NOx emissions since they vary exponentially with temperature. Also, at the low temperature side, the linear prediction underestimates the saving in emissions. This is a safe practice from an engineering perspective since it provides a quantification of the merit with margin.

Figure 10 shows the NOx15 emissions reduction while varying secondary air (linear approximation) vs the reduction estimated using the NOx design curve. Typically, the problem under investigation is initiated when an existing combustion system needs to be improved. The existing system is characterized by what is called the NOx design curve. This curve is the black curve shown in Figure 6 and corresponds to 14% secondary air. This curve can be used to estimate the NOx reduction as a function of secondary air reduction since this air will represent an increase in the mixer air and hence a decrease in the flame temperature. For the problem under investigation, we have already measured the actual reduction in NOx emissions. Both curves are plotted in Figure 10 and shows a comparison between the NOx reduction estimated from the NOx design curve and the actual reduction from measured data. At the higher temperature range (more than 1800K where the linear approximation is accurate) the estimate using the NOx design curve over estimates the benefit of reducing the secondary air by ~50%. This sheds light on the importance of evaluating the system performance experimentally before introduction to the engine to quantify the actual benefit in NOx emissions with reduction in cooling air. Our data suggests a 50 % correction factor should be applied to the prediction from the NOx design curve. The problem appears to be straight forward and may not call for extensive testing and validation since the hardware is essentially the same and will be fired at a lower flame temperature. However, it is evident that the interaction between both flows is strong and will have a significant impact on the emissions.

Figure 11 shows the impact of reducing the secondary air on CO emissions. It appears there is minimal impact at high flame temperatures. CO in this region of the curve is mainly due to CO2 dissociation. However, at lower temperatures, the CO emissions is reduced with a reduction in secondary air. This agrees well with the understanding that CO in this portion of the curve is mainly generated due to a quenching mechanism. This highlights the fact that manipulating secondary air can lead to improvements in both NOx and CO emissions. Typically, when one of these species increases the other is decreased. The reason

the CO improves at the low secondary air flows is due to the reduction of flame quenching. In other words, the reduction of secondary cooling air results in a reduction of the flame temperature needed to achieve the same combustor exit temperature. Also, the quenching air (the cooling air) was reduced. There are two competing effects and quantifying this is not straight forward. The quenching effect is dependent on flame flow interaction. To the authors knowledge, very limited success has been attained in capturing this through modelling techniques. The only possible accurate quantification method available today is to run the test and measure the impact. NOx is much better from a modeling perspective than CO.

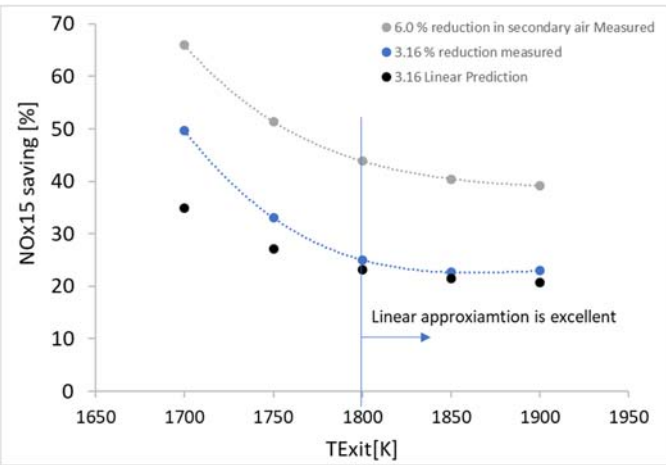

Figure 9. Percentage NOx reduction vs Tflame corresponding to secondary air percentage reduction

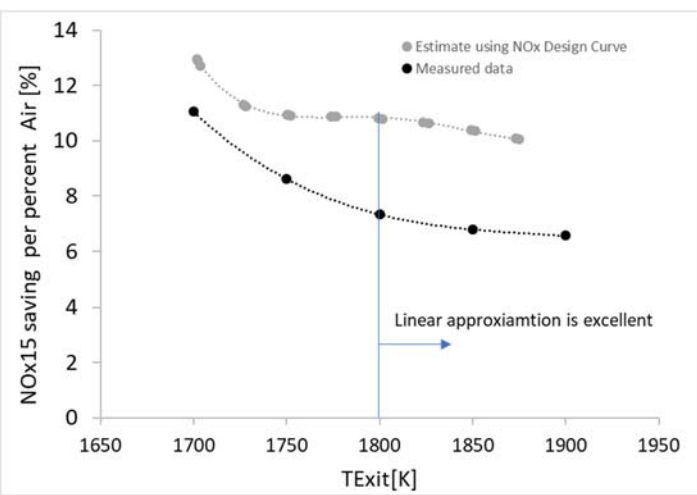

Figure 10. NOx reduction vs Tflame corresponding to 1 percent reduction in secondary air.

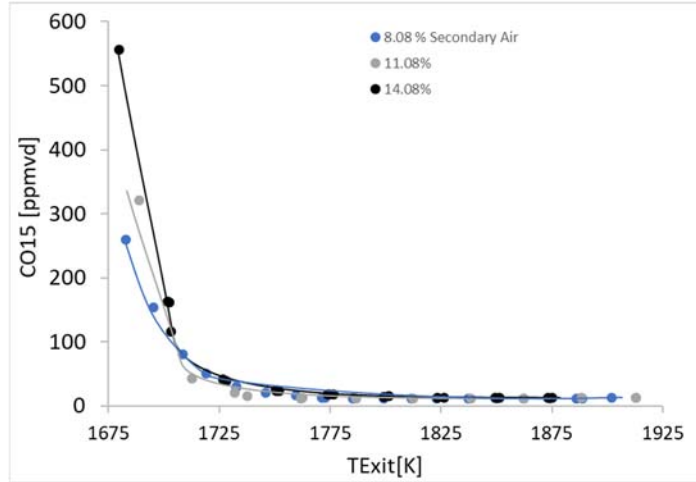

Figure 11. Impact of secondary air reduction on CO emissions

4.2 Extent of interaction between secondary air and the main flame and impact on acoustics

The interaction between the secondary air and the mixer air is driving the behavior reported in this study. The thermocouples placed on the dome as well as the emissions rakes at the exit can help identify the extent of interaction. This section is only focused on understanding the extent of interaction between the main and the variable portion of the secondary air. Therefore, the data presented here is given at the same TFlame and not the same TExit (the exit combustor temperature is not fixed, but the flame temperature is fixed and the only variable is the secondary air). This is important because the flame is the main source of heat to the heat shield and we will be using the thermocouples response to identify the extent of upstream interaction.

Figure 12 shows a plot of the variation of the dome heat shield temperature as the secondary air is being increased while holding the flame temperature constant. The four TC's shown here are located as described previously in Figure 4. The data shows that the secondary air major influence happens in the first quadrant and fades away as the middle plane of the combustor is reached. The interesting observation is the air is injected 25% downstream the dome structure, but it is circulated back to the dome by the main flow and the temperature drops as more air is being introduced. This behavior is because of the flow recirculation in the combustor. It appears that the interaction between the secondary air and the mixer flows influences the temperature distribution along the whole length of the combustor and not only downstream from the injection point.

Figure 13 shows the combustor exit profile at a fixed flame temperature and while the secondary air is increased 6% (from 8% to 14%). Again, we are only focusing on the extent of interaction. It is evident that the secondary flow continues to interact along the combustor length and the interaction grows as the flow proceeds toward the exit. The growth occurs slightly

beyond the mid plane of the combustor as indicated by the change in the emissions profile.

With this level of interaction of the secondary air with the main flame, it is important to study the impact on thermo acoustic instabilities. Marosky et. al discussed that the interaction between the panel air (similar to dome air in this study) and the main flow causes equivalence ratio fluctuations which may induce thermo-acoustic instabilities [12]. However, they did not run the test to confirm. Also, the flow field and physics of the combustion system is highly nonlinear such that no universal response dominates. If the question is will secondary cooling air cause thermo-acoustic instabilities? The right answer is it depends on what the secondary air is causing. Let us discuss what happened in this combustion system under investigation.

Figures 14 and 15 show the impact of secondary air variation on the low-frequency (up to 1000Hz) and high-frequency dynamics (1000-6000 Hz), respectively. The curves are plotted vs the same combustor exit temperature since the target of the curve is to show the impact of the redesign on dynamics levels. The high-frequency dynamics did not change. The low-frequency dynamics changed slightly for high levels of secondary flow. The change did not impact overall operability because the oscillations levels are small and not detrimental to performance. However, the change in low-frequency dynamics content is notable. At 1750K there is no change in the acoustics signature with varying secondary air. At higher temperatures the amplitude increased and at lower flame temperatures the amplitude decreased. It appears that the increase in flame temperature that is associated with the increase in secondary air drives more oscillations at the high side and more stable flame at the low side. The neutral point for this system is at 1750K.

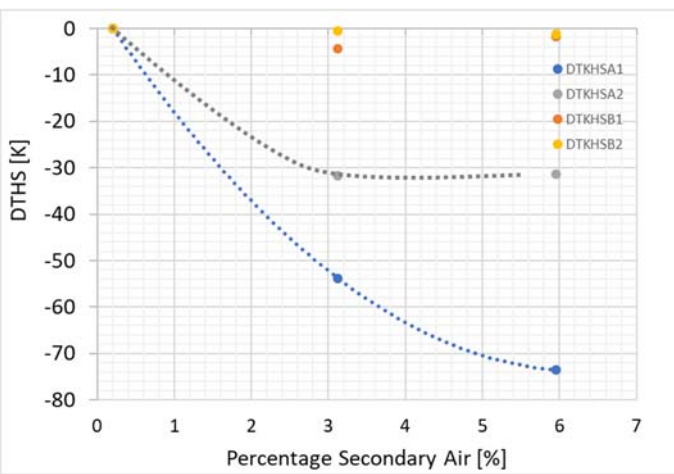

Figure 12. Impact of secondary air percentage increase on dome and heat shield temperature

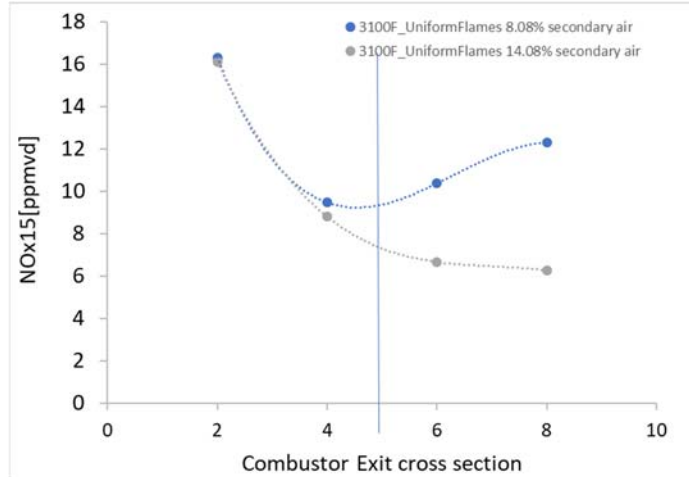

Figure 13. Impact of secondary air percentage increase on combustor exit NOx profile

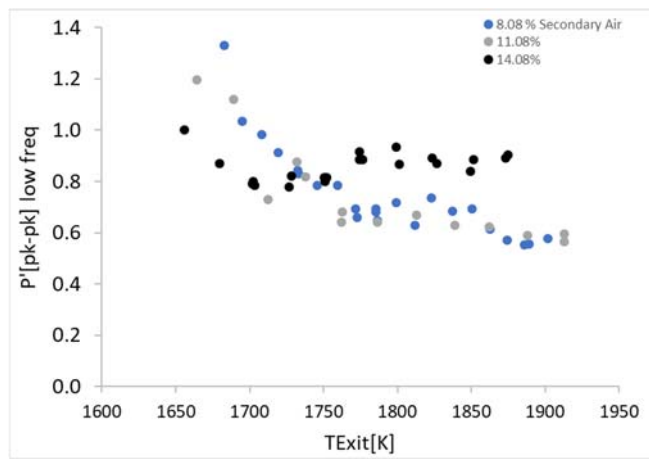

Figure 14. Impact of secondary air percentage variation on low frequency dynamics.

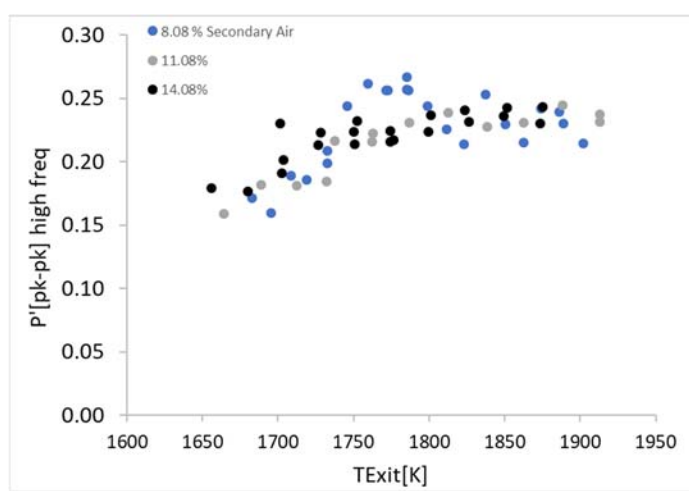

Figure 15. Impact of secondary air percentage variation on high frequency dynamics.

4.3 Utilizing the secondary air to achieve emissions reduction rather than imposing a penalty

In the previous sections it was shown that the reduction of the secondary air results in reduced NOx emissions. Also, for increased secondary flow (due to an increase in cooling requirements, for example) then there is a NOx penalty. In this section we will show that by appropriate handling of the cooling air distribution, one can reduce NOx emissions under some operating conditions.

Most combustion systems use flame temperature nonuniformity to suppress thermo-acoustic instabilities. Hence, some flames run hotter than others and we refer to this as mixer flame temperature bias. As we discussed previously, the overall air and fuel in the engine will not change at a specific load, but the bias can be large (up to hundreds of degrees).

This bias is illustrated in Figure 16. The figure shows the simple combustion system under investigation running in two modes based on mixer fuel flow bias. The first mode is essentially a mode where the burners are sent the same amount of fuel and hence, they have the same target flame temperature. In this case the target flame temperature is 1930K and the exit temperature is 1777K. The front portion of the combustor is referred to as the head-end. The combined air and fuel flowing through the mixer is summed together to provide a head-end temperature. Therefore, the first mode corresponds to a head-end temperature that is the same as each mixer flame temperature. Mode 2 corresponds to a bias in the mixer flame temperature. If we set one burner at 1875K then the second one must be 1986K to maintain the same head end temperature and consequently the same combustor exit temperature. This is a bias of 111K between both burners. Another way to look at this, is that there is a certain budget for the fuel and it can be divided any way among the mixers as long as operation is possible and emissions are acceptable.

Figure 17 shows the emissions variation for the two modes of operation. This is repeated two more times at 3 % (11 %) and zero variable secondary air (8%). The curve is only to be used to compare the two points at the same secondary air fraction. Close to zero secondary flow, it is apparent that the emissions with flame bias is higher than the emissions with the uniform flames. This can be explained by NOx production being an exponential function of temperature. Hence, the increase in temperature on one side due to the bias will result in a NOx penalty.

On the other hand, the 6% case shown in Figure 17 shows that NOx reduction can be achieved by releasing the secondary air at the hot portion of the flame. This is illustrated in Figure 16 for the non-uniform flame mode. The implication of this to the combustor designer is that the release of the secondary or cooling air close to the hot flames will improve the system emissions and can be used to reduce NOx emissions. Therefore, the system can be designed intelligently with the knowledge of the expected flame bias and the proper handling of the secondary air. The specific example shown here shows how the same combustion system emissions can be reduced from 9.25 ppm to 8.25 ppm just by handling the secondary air intelligently and without a penalty on acoustics. This is a transition of the same exact system from a low NOx to ultralow NOx system (ultra-low NOx stands for combustion systems running at < 9 ppm). The release of the cooing air close to the front end and deeper into the flame will always help NOx emissions.

Figure 18 can be used to better explain why this reduction is achieved. The figure shows the NOx emissions profile at the combustor exit with a 111K temperature bias with and without 6% secondary cooling air. The blue upper curve shows that most NOx generation is occurring at the right-hand side burner which is running 111K hotter than the left-hand side burner (this is aft looking forward as shown in Figure 4. One burner is on the left-hand side and the other is on the right-hand side). Discharging 6% of the secondary air at this specific spot will bring the NOx emissions down because this is the hot spot where the NOx is generated. This curve is not at the same combustor exit temperature. It is at the same flame temperature. It is just being used here for illustrations and magnification of the phenomenon under discussion. Figure 17 shows the two points compared at the same exit temperature (the two points all the way to the right) with and without the temperature bias.

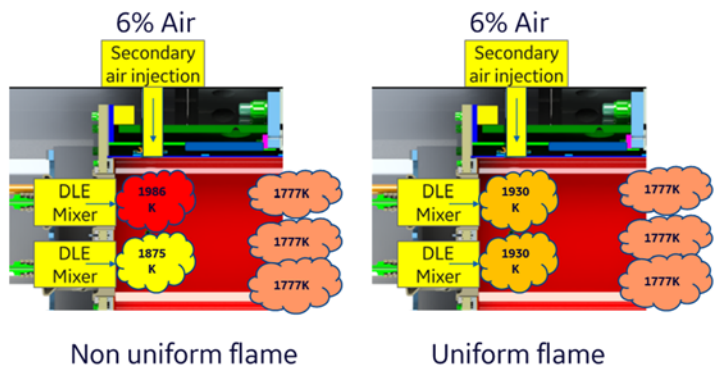

Figure 16. Illustration of the bias in individual mixers flame temperature while maintaining the same combustor exit temperature at 6% secondary air injection.

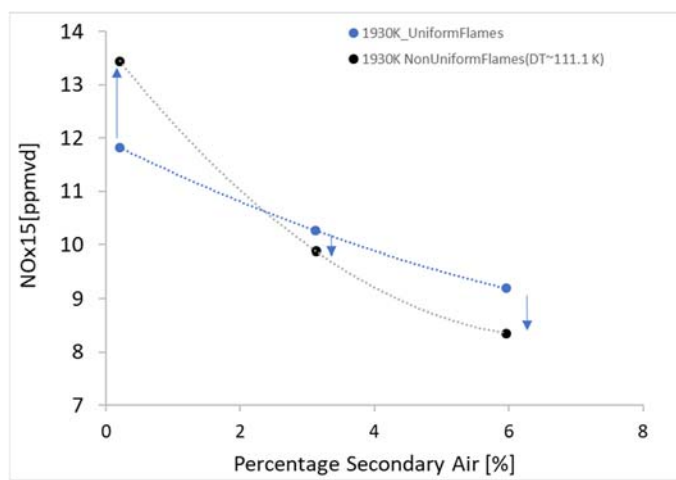

Figure 17. Impact of the secondary air on emissions in the presence of burner flame temperature bias

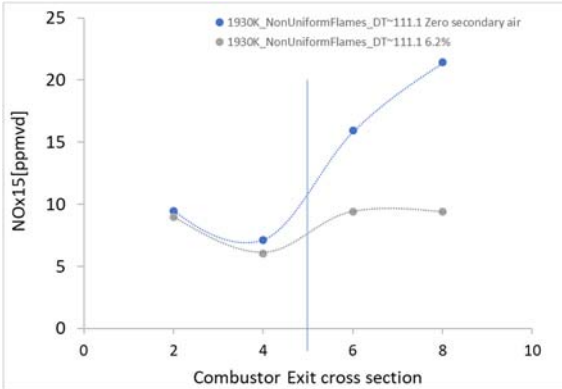

Figure 18. Impact of the secondary air on emissions in the presence of burner flame temperature bias

5 CONCLUSIONS

Cooling air and secondary flow interacts with the main mixer flows and this interaction was shown to impact both NOx and CO. Decreasing secondary air was shown to yield a NOx and CO benefit. The point of admission or release of the secondary air and the method will dictate the amount of saving. In this combustion system under investigation, the reduction of NOx measured per percent reduction in secondary air is about 7%. The variation is a function of the temperature, but this value provides an approximate level. Estimating the NOx benefit using the NOx design curve yields an estimate that is 2x higher than what is achievable in this case. If there was no interaction between the secondary air and the main air then the NOx reduction will follow the estimate from the NOx design curve. In other words, in this study, the secondary air was already quenching the flame and reducing NOx. The decrease in NOx associated with the decrease in secondary air appears to be linear at least within the boundaries of this study (14-8 % roughly in this study). The linear approximation is valid in the high temperature range which is typically the area of concern regarding NOx. There was limited impact on operability manifested in little to no impact on acoustics signature. The data shows that the interaction was not only from the injection point to the downstream portion, but the flow was carried to the dome structure through main flow recirculation. If the combustor is operating with a temperature bias, then the NOx can be improved by discharging the secondary air close to the hot flame. It was demonstrated that the combustion system emissions can be reduced by directing the interaction between the secondary flow toward the hot portion of the flame. The results of this study are system dependent and it would be expected that some of the interactions between secondary air and the main combustion flows would vary among different combustor geometries. Nevertheless, the trends observed are expected to be similar for other configurations.

6 REFRENCES

[1] Leonard, G., and Correa, S., "NOx Formation in Premixed High-Pressure Lean Methane Flames," Proc. Fossil Fuel Combustion Symposium: 13th Annual Energy-Sources Technology Conference and Exhibition, pp. 69-74.

[2] Elkady, A. M., Herbon, J., Kalitan, D. M., Leonard, G., Akula, R., Karim, H., and Hadley, M., 2012, "Gas Turbine Emission Characteristics in Perfectly Premixed Combustion," Journal of Engineering for Gas Turbines and Power, 134(6).

[3] Mohammad, B. S., Balasubramanyam, P., McManus, K., Ruszczyk, J., Elkady, A. M., and Mueller, M. A., "Combustion Dynamics Diagnostics and Mitigation on a Prototype Gas Turbine Combustor," Proc. ASME Turbo Expo 2012: Turbine Technical Conference and Exposition, pp. 383-389.

[4] Elkady, A. M., Brand, A. R., Vandervort, C. L., and Evulet, A. T., "Exhaust Gas Recirculation Performance in Dry Low Emissions Combustors," Proc. ASME 2011 Turbo Expo: Turbine Technical Conference and Exposition, American Society of Mechanical Engineers, pp. 1183-1192.

[5] Graham, G., Zhuyin, R., Hendrik, F., Liuyan, L., Venkat, T., and Hasan, K., "Modeling CO With Flamelet-Generated Manifolds: Part 2 — Application," Proc. ASME Turbo Expo 2012: Turbine Technical Conference and Exposition, American Society of Mechanical Engineers, pp. 1177-1184.

[6] Karim, G. G., Zhuyin, R., Hendrik, F., Liuyan, L., Venkat, T., and Hasan, "Modeling CO With Flamelet-Generated Manifolds: Part 1—Flamelet Configuration," Proc. ASME Turbo Expo 2012: Turbine Technical Conference and Exposition, American Society of Mechanical Engineers, pp. 1141-1151.

[7] Bhargava, A., Kendrick, D. W., Colket, M. B., Sowa, W. A., Casleton, K. H., and Maloney, D. J., "Pressure Effect on NOx and CO Emissions in Industrial Gas Turbines," Proc. ASME Turbo Expo 2000: Power for Land, Sea, and AirV002T02A017.

[8] Rutar, T., and Malte, P. C., 2002, "NOx Formation in High-Pressure Jet-Stirred Reactors With Significance to Lean-Premixed Combustion Turbines," Journal of Engineering for Gas Turbines and Power, 124(4), p. 776.

[9] Biagioli, F., and Guthe, F., 2007, "Effect of pressure and fuel–air unmixedness on NOx emissions from industrial gas turbine burners," Combustion and Flame, 151(1-2), pp. 274-288.

[10] Rutar, T., Horning, D. C., Lee, J. C. Y., and Malte, P. C., "NOx Dependency on Residence Time and Inlet Temperature for Lean-Premixed Combustion in Jet-Stirred Reactors," Proc. ASME 1998 International Gas Turbine and Aeroengine Congress and ExhibitionV003T06A036.

[11] Therkelsen, P., Werts, T., McDonell, V., and Samuelsen, S., 2009, "Analysis of NOx Formation in a Hydrogen-Fueled Gas Turbine Engine," Journal of Engineering for Gas Turbines and Power, 131(3).

[12] Marosky, A., Seidel, V., Bless, S., Sattelmayer, T., and Magni, F., 2012, "Impact of Cooling Air Injection on the Primary Combustion Zone of a Swirl Burner," Journal of Engineering for Gas Turbines and Power, 134(12).

[13] Agency, E. P., "Method 7e," https://www.epa.gov/sites/production/files/2017-08/documents/method_7e.pdf.