Check for updates

Enhanced External Aerodynamic Performance of a Generic Combustor Using An Integrated OGV/Prediffuser Design Technique

A. Duncan Walker
e-mail: a.d.walker@lboro.ac.uk

Jon F. Carrotte

James J. McGuirk

Dept. of Aero. and Auto. Engineering,
Loughborough University Loughborough,
LE11 3TU, United Kingdom

In this paper we use experimental measurements to characterize the extent that improved the external aerodynamic performance (reduced total pressure loss, increased flow quality) of a gas-turbine combustion system may be achieved by adopting an integrated OGV/prediffuser technique. Two OGV/prediffuser combinations were tested. The first is a datum design corresponding to a conventional design approach, where the OGV and prediffuser are essentially designed in isolation. The second is an "integrated" design where the OGV blade shape has been modified, following recommendations of earlier CFD work (Final Report No. TT03R01, 2003), to produce a secondary flow/wake structure that allows the prediffuser to operate at a higher area ratio without boundary layer separation. This is demonstrated to increase static pressure recovery and reduce dump losses. Experimental measurements are presented on a fully annular rig. Several traverse planes are used to gather five-hole probe data that allow the flow structure through the OGV, at the inlet and exit of the prediffuser, and in the inner/outer annulus supply ducts to be examined. Both overall performance measures (loss coefficients) and measures of flow uniformity and quality are used to demonstrate that the integrated design is superior. [DOI: 10.1115/1.2364008]

Introduction

Gas turbine combustion systems require careful design of their external aerodynamic arrangements. These form the interface between the airflow supplied by the compression system and its distribution over the various feed paths to combustor components (fuel injector, dilution ports, cooling films), or downstream turbine components (e.g., Nozzle Guide Vane (NGV) cooling). The airflow distribution has to be accomplished at minimum total pressure loss to avoid associated Specific Fuel Consumption (SFC) penalties. The optimum configuration/layout of combustor external aerodynamics needs to be reviewed, since legislation for the emission of pollutants from aerogas turbines is dictating a significant change to the architecture of future combustor systems. Lean combustion is essential for the achievement of the envisaged NO_x reduction targets. This requires excess air in the primary combustion zone, leading to much larger air fractions than typical for conventional (annular) combustors entering the forward part of the flame tube. Hence, lean combustion impacts the airflow into the combustion system in several ways:

- Lean fuel injection modules are significantly larger than traditional airspray counterparts, thus necessitating a deeper flame tube. This will adversely affect the loss due to increased turning within the dump region.
- If lean fuel injection modules are to be operated satisfactorily, the airflow feed quality (e.g., uniformity of pressure profile over the injector inlet area) may need to be controlled much more closely than in traditional systems.
- Flow distribution within the combustor is significantly altered because the majority of the compressor efflux now passes directly through the injector, with only a small amount of flow passing down the annuli.
- The cooling flow itself must be reduced in order to provide sufficient air for lean combustion, requiring new cooling technologies to be developed. The air feed to these new cooling arrangements must be of appropriate quality, but is often taken from the low total pressure air near the diffuser walls, necessitating possible external aerodynamic changes.

Existing design rules for the external aerodynamic layout of conventional combustion systems may not therefore be easily extrapolated to lean low emission combustors.

This is particularly true for the prediffuser, which in a conventional system is required to provide an exit profile with a radially and circumferentially uniform distribution with maximum static pressure recovery but minimum total pressure loss. For future combustors, a nonuniform flow, varying for example circumferentially with the location of the fuel injectors, may be appropriate. Nevertheless, feed to the individual fuel injectors must still be of high quality with low loss and uniform distribution in order to ensure homogeneous mixing of the air and fuel. Further, the feed annulus flows around the flame tube will be made up predominantly of prediffuser boundary layer flow, which, already of poor quality, will have to turn and flow around a flame tube of increasing depth. The aerodynamic quality of this air is also critical, since the cooling systems must strive to maintain acceptable temperatures, despite the reduced supply of cooling air.

Additionally, changes in combustor geometry and flow distribution will affect the operation and performance of the prediffuser itself. The circumferential variation in downstream blockage and the likely desirable distribution of bulk pitch angle at exit will undoubtedly result in different optimum configurations of prediffuser area ratio and geometry than has been typical to date. Thus,

Contributed by the International Gas Turbine Institute (IGTI) of ASME for publication in the Journal of Engineering for Gas Turbines and Power. Paper presented at the ASME Turbo Expo 2006, Barcelona, Spain, May 8 – 11 2006, Paper No. GT2006-90184. Manuscript received October 1, 2005; final manuscript received February 1, 2006. IGTI Review Chair: R. S. Abhari.

 Copyright © 2007 by ASME

Downloaded from http://asmedigitalcollection.asme.org/gasturbinespower/article-pdf/129/1/80/5892814/80_1.pdf by University of Cincinnati user on 05 January 2026

for lean module combustion to be successful, it is argued that it is important that the design of the combustion system is a fully integrated concept with each component being optimized to allow the effect of, and the effect on, upstream and downstream components to be considered. In this paper we present recent work carried out to study how this may be achieved for the compressor OGV/prediffuser interaction.

The prediffuser/dump diffuser design concept has become established as the standard design philosophy over the last 20 years (Klein [1]). It is well known, however, that the performance of annular prediffusers is sensitive to the inlet conditions presented to them (Stevens et al. [2]; Klein [3]). Similarly, the introduction of load-bearing radial struts into the prediffuser can have beneficial effects (swirl level reduction, more uniform and stable annulus flow feed to flame tube features), but also performance reducing effects (extra pressure loss and poorer feed quality to burners in line with struts), so that careful aerodynamic design is needed (Barker et al. [4]). The importance of compressor exit conditions [Outlet Guide Vane (OGV) wake structure and turbulence field] on combustor annular diffuser performance has led to several studies to capture the characteristics of the flow entering the prediffuser in great detail (Zierer [5], Carrotte et al. [6], and Ma and Jiang [7]). It is observed, for example, that diffusers in turbomachinery environments achieve a considerably higher pressure recovery than with classical "clean" ducted flow inlet conditions ([1,5]) due to the increased turbulent mixing associated with compressor exit flow fields. OGV exit flow structure is fairly complex, with regions of relatively high loss located near the junction of OGV blade suction surface and inner/outer casings, thin wakes, and significant secondary flows [6]. This implies that diffuser performance will only be maximized when the diffuser and turbomachinery are aerodynamically matched.

This has been comprehensively examined recently by Barker and Carrotte ([8,9]). By examining diffusers of various area ratios downstream of an engine representative OGV row behind a single stage compressor, it was possible to determine that increases in loss associated with OGV wake mixing in the diffuser adverse pressure gradient field were mainly associated with the low energy flow adjacent to the casings. The data also confirmed that the diffuser pressure rise was enhanced by the OGV blade wake mixing process, leading to pressure increase beyond that which the casing wall boundary layer could sustain if simple axisymmetric inlet conditions had been present. Finally, a detailed analysis of the stream tube evolution within the diffuser indicated regions where the secondary flow convected high energy flow toward the diffuser endwalls, simultaneously removing low energy boundary layer fluid. The fluid element streakline paths were predominantly associated with the diffuser inlet conditions provided by the upstream OGV blade. These results confirmed that the secondary flow field generated at the OGV exit is significant in controlling endwall boundary layer growth and delaying flow separation in the diffuser. This implies that a flow control approach to OGV/prediffuser design could be adopted to optimize aerodynamic matching and allow, for example, maximum prediffuser area ratio to be achieved while retaining acceptable and stable flow quality within the diffuser for interactions with components farther downstream.

Diffuser/combustor flow interaction has been a longstanding area of interest in CFD studies of combustor external aerodynamics (Karki et al. [10]; Koutmos and McGuirk [11]). However, emphasis to date has focused on an analysis of a *prescribed* diffuser/combustor annulus geometry in terms of the resulting pressure loss and quality of air feed to injector, flame tube ports, etc. An alternative philosophy would be to use an optimization approach to find, for example, the best OGV/prediffuser arrangement that would lead to the overall best performance.

The idea of integrated consideration and optimization of components in gas-turbine turbomachinery is receiving much attention currently. Shahpar [12], for example, has outlined the development and application of a design system for automatic optimization used within a Rolls Royce (SOPHY), and has provided examples of industrial engine exhaust diffuser and bypass exhaust nozzle optimization. Schlüter et al. [13] have recently proposed a method for the simultaneous solution of a complete compressor/combustor/turbine flow, also including both RANS and LES CFD flow solvers. It is currently difficult to imagine such an approach being used for optimization purposes since overall compute times are long and optimization methods typically involve tens or hundreds of CFD solutions. However, the optimization of strongly coupled components such as the OGV row and downstream prediffuser certainly merit further study. To this end, Barker et al. [14], as part of an EU project entitled "LOPOCOTEP" (LOw POllutant COmbustor TEchnology Programme) conducted a detailed experimental and computational study comparing the performance of a conventional OGV/diffuser design (i.e., essentially designed on an isolated component basis with the OGV design ignoring the flow field within the diffuser, and vice versa), with an integrated optimized OGV design (IOGV) obtained from numerical predictions, which took account of the strong interaction between the components. This work demonstrated how the OGV geometry could be modified (e.g., via blade lean, sweep, etc.) to manipulate the secondary flow emerging from the OGV passage such as to create beneficial effects in the diffuser flow and allow increased area ratio and a gain in the overall system performance. The experimental part of this work provided inlet condition data (both mean and turbulence components) for CFD predictions of the OGV row and prediffuser and also validation data to assess the extent that the improved performance inferred by the CFD was achieved in practice.

The success reported in [14] has directly led to the present work. The experimental data gathered in [14] was restricted to the OGV/prediffuser itself; it was not possible to conduct measurements in the dump region or assess the overall system performance in terms of pressure loss improvements to the annulus regions surrounding the combustor. Accordingly, an experimental program was set in place (as part of a further EU project entitled "INTELLECT" (INTEgrated Lean Low Emission CombusTor)). This allowed a complete dataset to be gathered, for the same compressor rotor and dump region geometry, both for a conventional OGV/prediffuser design (referred to here as the "Datum" design) and for the optimized integrated OGV/prediffuser design recommended by [14] (referred to here as the "LOPOCOTEP" design). Detailed flow structure measurements from the rotor exit through to inner and outer annulus ducts surrounding a generic combustor flame tube were undertaken. This enabled OGV performance, prediffuser performance, and dump performance all to be assessed. The advantage of using a fairly simple and generic flame tube shape and providing measurements from rotor inlet through to annulus ducts means that the dataset is suitable for the validation of computational methods that capture both turbomachinery stage and combustor flow processes, such as reported in [13]. The dataset also allows a full and comprehensive assessment of the advantages of adopting an integrated approach for combustor external aerodynamics.

Experimental Facility and Instrumentation

Experimental Facility. All experimental data were obtained on a low speed isothermal test facility operating at nominally atmospheric conditions (Figs. 1 and 2). Air is drawn into a large inlet plenum above the vertically mounted facility, before passing through an inlet flare and honeycomb flow straightener. The air is then accelerated over a bell-mouth intake section prior to passing into the test section that comprises a single stage axial compressor with Inlet Guide Vanes (IGVs), an OGV/prediffuser assembly, and a downstream generic combustion system (Fig. 3). The mean radius of the IGV, rotor, and OGV rows is 375 mm with a passage height of 36.6 mm (hinlet). The IGV row consists of 80 vanes preceding a rotor operated at a fixed nondimensional mass flow

Downloaded from http://asmedigitalcollection.asme.org/gasturbinespower/article-pdf/129/1/80/5892814/80_1.pdf by University of Cincinnati user on 05 January 2026

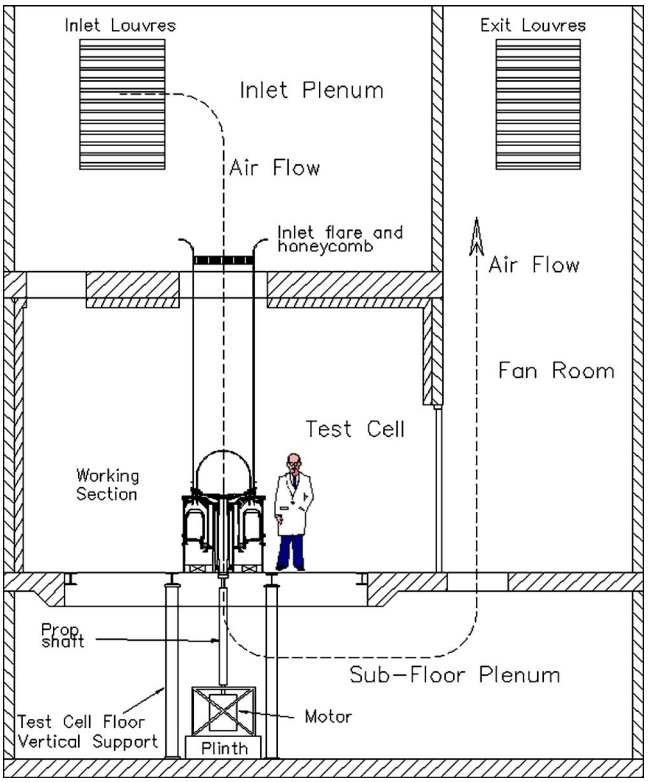

Fig. 1 Experimental facility—Test cell schematic

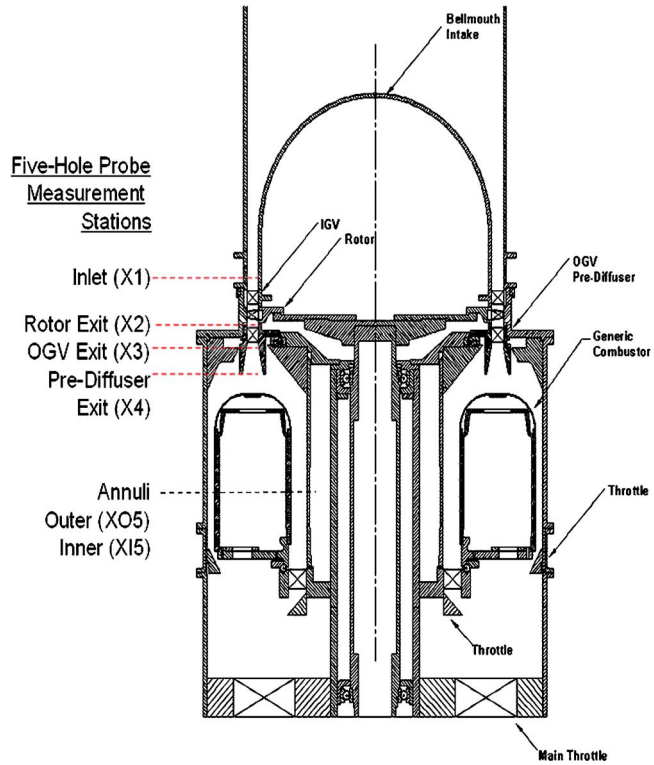

Fig. 3 Test section showing traverse plane locations

condition ($\dot{m}\sqrt{(RT)}/AP$) and speed $[N\pi D/\sqrt{(\gamma RT)}]$ corresponding to a flow coefficient (V_a/U) of $\phi=0.403$ and a mass flow of approximately 4 kg s^{-1}. This results in an axial velocity through the blade rows of approximately 40 m/s (Mach No. 0.12) and an OGV Reynolds number of approximately 1.6×105. The OGV is presented with approximately 450 of swirl by the rotor. After the flow passes through the OGV/prediffuser assembly its distribution to the feed annuli and combustor cowl ports (simulated fuel injector flow) is controlled by a system of downstream throttles, while a further throttle within the exhaust system ensures that the compressor is maintained on the desired operating point.

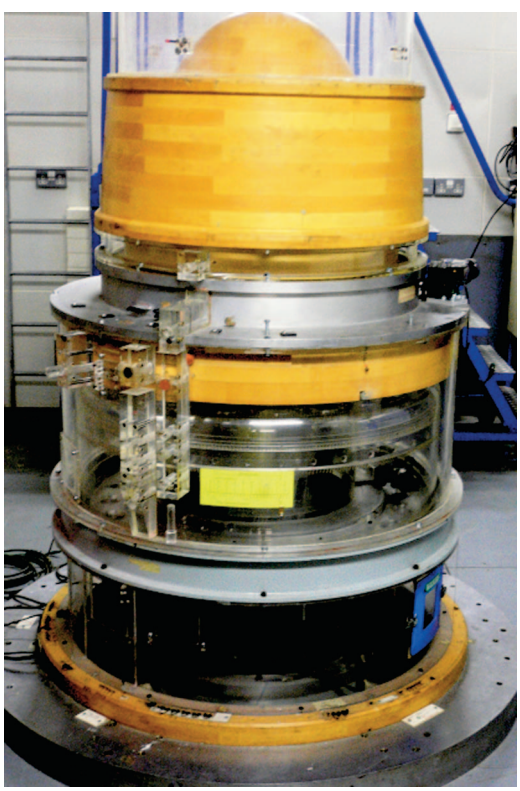

Fig. 2 Experimental facility—Test section photograph

OGV/Prediffuser Geometries.

Datum OGV/Prediffuser. The OGV row for this configuration consists of 160 vanes (note this is 2 per IGV) each of 39 mm chord, with a thickness to chord ratio of 6% and a constant blade section from hub to tip; in addition, the blade section was 2D, i.e., at any radius it was positioned in the same axial and circumferential location along the whole span. The prediffuser is a simple design having an area ratio of 1.6 and a nondimensional length (L/hinlet) of 2.23. Although designed using conventional design rules, if considered in isolation from the OGV row and downstream combustor, the datum prediffuser has a slightly larger area ratio than would be recommended using the design criteria as described in Howard et al. [15], whose experiments were conducted with axisymmetric thin boundary layers at the annular diffuser inlet. According to Howard et al. [15], for a nondimensional length of 2.23, the stall line corresponds to an area ratio of 1.58. However, Barker et al. [14] demonstrated that downstream of a single stage axial compressor the datum prediffuser, in fact, remains within a stable flow regime, which highlights the importance of diffuser inlet conditions.

Integrated (LOPOCOTEP) OGV/Prediffuser. The OGV row for this configuration also contains 160 vanes, however, as recommended in [14], OGV blade geometry changes were introduced. Based on the same chord and basic blade profile as the Datum vane and using computational techniques, Barker et al. [14] manually optimized the blade by moving (at each radial position across the span) the section axially (sweep) or circumferentially (lean)

Downloaded from http://asmedigitalcollection.asme.org/gasturbinespower/article-pdf/129/1/80/5892814/80_1.pdf by University of Cincinnati user on 05 January 2026

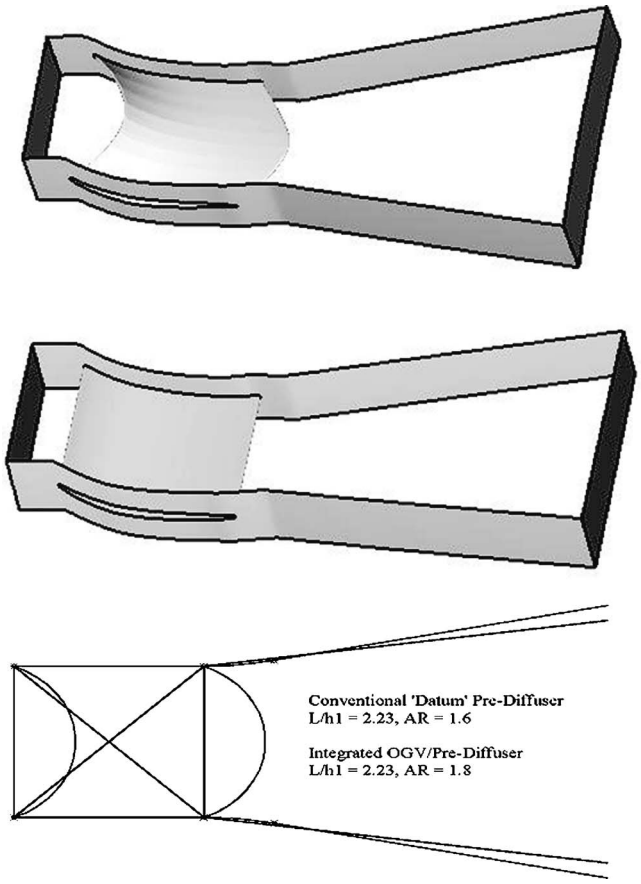

Fig. 4 Datum (top), integrated (middle) geometries, and cross-section comparison (bottom)

relative to the hub location. This changes the aerodynamic loading along the span. In addition, a small change to the trailing edge camber of some sections was introduced to reduce the residual swirl level at exit from the OGV row. The resultant spanwise velocity components were observed to help reduce blade loading toward the hub and the tip and encourage higher momentum fluid transport toward the walls, thus off-loading the end wall boundary layers at the prediffuser inlet. Hence, although still a simple design, the LOPOCOTEP Integrated OGV/prediffuser was able to perform satisfactorily at an overall area ratio of 1.8. At the same nondimensional length of 2.23, this should undoubtedly have resulted in separation according to Howard et al. [15]. Figure 4 illustrates the geometry differences between the two designs in illustrative format and also contrasts the diffuser area ratios. Figure 5 plots the two diffusers on a nondimensional length/area ratio chart, showing the stall line implied by the Howard et al. [15] data. As already mentioned, even the Datum prediffuser operates satisfactorily, even though it is just above the "clean" inlet stall line, and the prediffuser for the LOPOCOTEP IOGV design is well above this stall line.

Generic Flame Tube Geometry. The flame tube geometry downstream of the prediffuser exit has been intentionally made simple for the present tests. While still presenting a realistic level of blockage, the combustor has been simplified such that it contains a typical dump region geometry, a fully annular flame tube of appropriate radial depth and inner/outer annulus flow heights, but a clean outer surface with no attempts made to include dilution ports or cooling film features. The only porosity in the flame tube is a series of 20 round holes to represent the path of air passing into the fuel injector (no burner arm or other features are used; see Fig. 6). Lean flow combustors often do not feature air

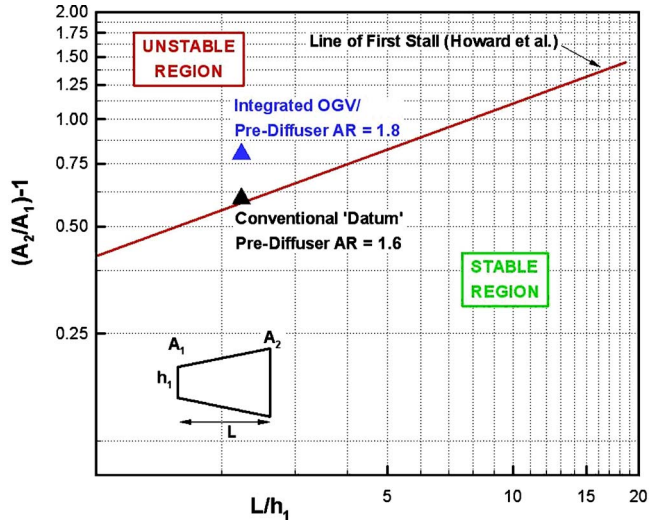

Fig. 5 Datum and integrated geometries on diffuser chart

admission ports in the annuli and are also likely to incorporate new cooling technologies. Hence removal/omission of these features seems logical at this stage. Figure 6 shows a close-up of the flame tube and dump region. The nondimensional distance from the OGV exit to the flame tube was maintained at 3.63 hinlet. The 20 round holes in the cowl have an effective area (radius ~20 mm), which allows in the present tests approximately 30% of the prediffuser efflux to enter the cowl. Here 30% is typical of conventional combustors for fuel injector plus head cooling mass flow, rather than the much higher cowl mass flow of lean burn fuel injector designs. The intention here is, in this first step, to investigate the benefits of the IOGV approach for a conventional system and then, in future measurements, to quantify the performance benefits for a higher cowl mass flow system. This step-by-step approach was necessary since the optimum IOGV design will certainly be influenced by the cowl mass flow and the LOPOCOTEP design adopted here was determined using 30% cowl flow. The remaining mass flow is evenly split between inner and outer annuli.

Instrumentation. The aerodynamic performance of each system was assessed using suitably calibrated miniature five-hole

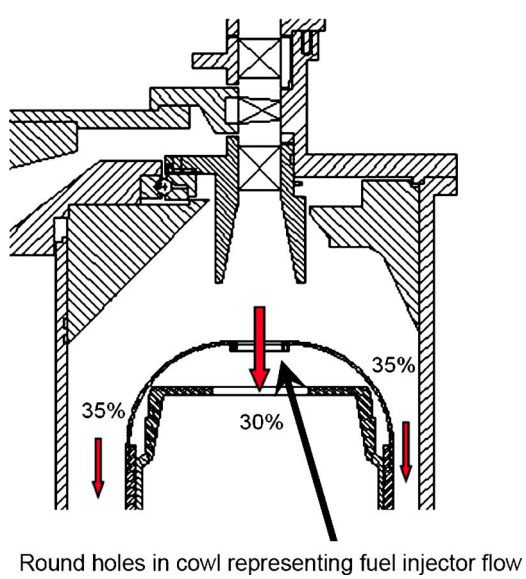

Fig. 6 Flame tube configuration and mass flow split

Downloaded from http://asmedigitalcollection.asme.org/gasturbinespower/article-pdf/129/1/80/5892814/80_1.pdf by University of Cincinnati user on 05 January 2026

probes of overall diameter 1.5 mm, as described by Wray and Carrotte [16]. The probes were employed in the non-nulled mode to determine the local flow vector and total and static pressures. As indicated in Fig. 3, five-hole probe area traverses were conducted at rig inlet (X1), rotor exit (X2), OGV exit (X3), prediffuser exit (X4), and within the inner (XI5) and outer (XO5) feed annuli. The number of measurement points per area traverse plane was 820 (41 circumferential x 20 radial). Pressures were recorded using Furness FCO44 pressure transducers and corrected to ICAO standard day conditions (i.e., 101325 Pa and 288.15 K). The probes were traversed in the radial direction using a stepper motor powered linear guide attached to the external casings of the test section. Circumferential traversing was achieved by either rotation of the casing about the test section or rotation of the IGV, OGV, and flame tube using a dc motor. Operation of the test rig, positioning of the instrumentation, and digitization of all pressure signals was PC controlled. Further details of the mechanical arrangements of the rig and traversing systems are fully described in [16].

Data Reduction and Errors. The overall aerodynamic performance was quantified in terms of total pressure loss and static pressure recovery coefficients derived from the five-hole probe area traverse data. Thus, at any measurement plane the air mass flow rate and local bulk average velocity are defined as:

$$\dot{m} = \int \rho U \, dA = \rho \bar{U} A$$

For the experiments described here, the resulting mass flow balance on area traverse planes was generally within ±1% of the measured total air mass flow entering the test facility [measured via a single five-hole probe traverse at inlet to the IGV row (X1)]. Spatially averaged values of total and static pressure at each plane were derived using the mass-weighted technique described by Klein [15]:

$$\tilde{P} = \frac{1}{\dot{m}} \int P \, d\dot{m} = \frac{1}{\rho \bar{U} A} \int P \rho U \, dA$$

$$\tilde{P} = \tilde{p} + \alpha \frac{1}{2} \rho \bar{U}^2, \quad \alpha = \frac{1}{A} \int \left(\frac{U}{\bar{U}} \right)^3 dA$$

$$\lambda_{A-B} = \frac{\tilde{P}_A - \tilde{P}_B}{\tilde{P}_A - \tilde{p}_A}, \quad Cp_{A-B} = \frac{\tilde{p}_B - \tilde{p}_A}{\tilde{P}_A - \tilde{p}_A}$$

For spatially non-uniform incompressible flow which is in a predominantly axial direction it follows that:

Where the kinetic energy flux coefficient, α, represents the ratio of the mass weighted mean kinetic energy of the non-uniform flow to that of a uniform flow through the same passage area with the same mass flow rate. Changes in the spatially averaged pressures between measurement planes A and B are expressed in terms of the mass-weighted total pressure loss (λ) and static pressure rise (Cp) coefficients as follows:

The mass-weighted total pressures derived at each of the traverse planes shown in Fig. 3 were repeatable to within ±1 mm H_2O, a variation that amounts to less than ±0.5% of the dynamic pressure recorded at OGV exit. Thus, the repeatability of the derived total pressure loss and static pressure rise coefficients relating to overall performance was better than ±0.005 of the values presented here.

RESULTS AND DISCUSSION

Preliminary Rig Commissioning Measurements. As mentioned previously, the present measurements, conducted as part of the INTELLECT project, are following on from an earlier study conducted during the LOPOCOTEP project. In between these studies the experimental facility has been considerably modified; it was considered wise therefore to conduct a preliminary rig recommissioning test to make sure earlier data could be reproduced. With the inlet section (IGVs and rotor), compressor OGV/prediffuser assembly, and operating conditions in common, it was important to ensure that the flow field, particularly the boundary layer growth at the rotor inlet and exit, were consistent with previous work. Figure 7 illustrates a single radial traverse for mean axial velocity taken at rotor inlet (X1) and shows excellent agreement between previous and current builds for both Datum and IOGV configurations studied in the present investigation. It is clear that the effects of geometry modifications downstream have not penetrated upstream past the rotor. The inlet flow to the rotor is maintained as one with small boundary layer growth on the inner (12% h) and outer (16% h) casing walls, with a flat core. At the rotor exit (X2) the measurement sector corresponds to one OGV space and circumferentially averaged profiles of axial velocity and total pressure (Fig. 8) again show good agreement with previous data. The data shown are for the IOGV geometry only, but it is important to note that, within experimental error, results at X2 are comparable between Datum and IOGV designs. In other words the changes to the OGV and prediffuser geometry have also not influenced the static pressure field at rotor exit, which might

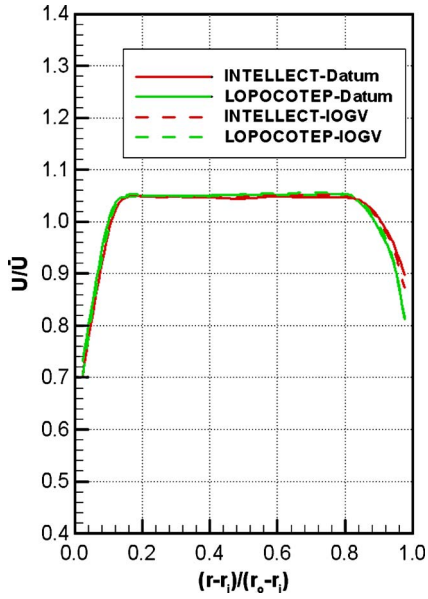

Fig. 7 Axial velocity profile at rotor inlet (X1)

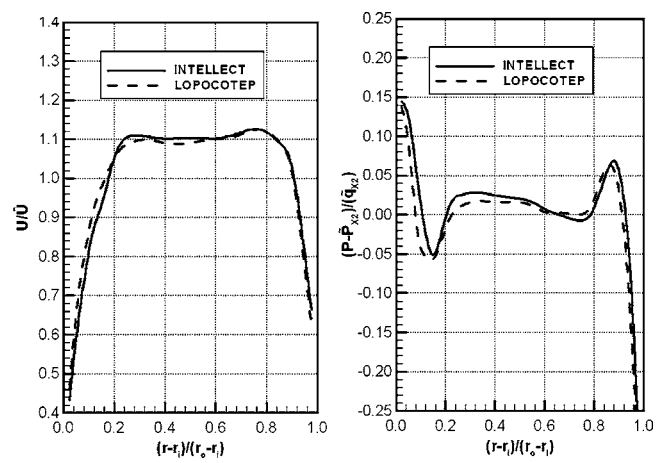

Fig. 8 Axial velocity and total pressure profiles (IOGV) at rotor exit (X2)

Downloaded from http://asmedigitalcollection.asme.org/gasturbinespower/article-pdf/129/1/80/5892814/80_1.pdf by University of Cincinnati user on 05 January 2026

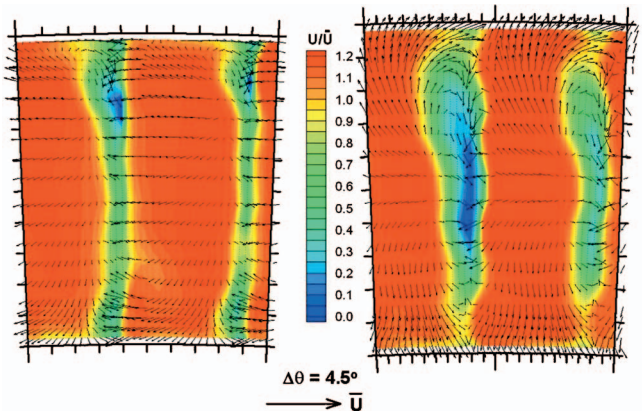

Fig. 9 OGV exit (X3) axial velocity contours and secondary flow vectors: Datum (left); IOGV (right)

have led to a change in the work profile along the span of the rotor. Any interaction effects between the rotor and the different OGV/prediffuser systems have been minimized. It can be seen that at the rotor trailing edge the boundary layer growth is now ~25% of passage height and there is clear evidence of the work profile of the rotor and of a rotor tip vortex loss process in the total pressure profile.

OGV Exit (X3). The above data were considered adequate proof that the test facility had been successfully recommissioned. Attention was now turned to measurements that quantified both aerodynamic performance and allowed a comparison between Datum and IOGV designs. The first plane to be studied was OGV exit (X3). Axial velocity contours and secondary velocity vectors at station X3 are presented in Fig. 9, plotted over a two OGV measurement sector for both OGV/prediffuser configurations. The secondary velocity vectors plotted in Fig. 9 and elsewhere later represent simply the local ratio of radial to circumferential velocity components. A 2-OGV passage sector was chosen as the ratio of IGVs to OGVs could still be identified in neighboring OGV wakes at X3; see Fig. 9. For the Datum blade the wakes are relatively thin and contain two regions of low momentum near the hub and at two-thirds blade height, the latter associated with the rotor tip vortex. The secondary flow pattern of the Datum blade shows a small amount of residual swirl remains, with the radial flow being predominantly inward. The blade geometry of the IOGV design has clearly manipulated the wake structure in the vicinity of the endwalls. The secondary flow is directed by the blade toward each end wall and has already at X3 had the effect of energizing the endwall boundary layers; the wakes are, however, noticeably thicker near midpassage height. Table 1 summarizes the performance parameters for the OGV row; the IOGV design incurs a slightly higher loss as it is performing more work by imparting an increased radial component on the flow, and has thicker wakes.

Prediffuser Exit (X4). Velocity contours and secondary flow vectors at the prediffuser exit (X4) for the Datum and IOGV designs are presented next. Sector data were again initially collected over 2 OGV passages, to capture the IGV/OGV interaction mentioned previously, which can still be identified at the prediffuser exit (see Fig. 10 for the Datum geometry). In future experiments,

Table 1 OGV pressure loss and Cp coefficients

Geometry	$\lambda_{X2\text{-}X3}$	$Cp_{X2\text{-}X3}$
Datum	0.12	0.38
IOGV	0.14	0.38

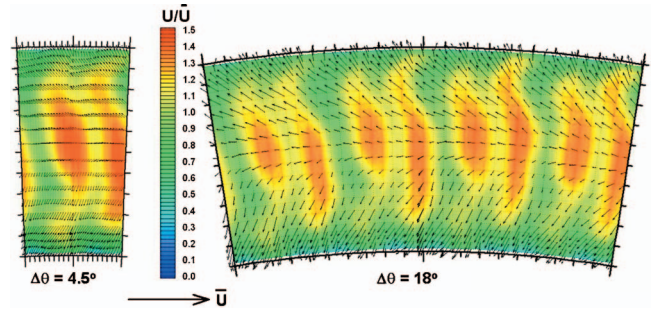

Fig. 10 Axial velocity contours and secondary flow vectors at pre-diffuser exit (X4) datum design 2 OGV sector (left); 8 OGV sector (right)

when the injector mass flow will be increased, the prediffuser exit flow field may exhibit stronger evidence of the circumferential variation in downstream blockage. Under these circumstances it will be necessary to conduct measurements over a complete injector sector (eight OGV passages) in order to capture the circumferentially repeating pattern. To examine the acceptability of maintaining the number of measurement points at 820, an area traverse over an 8 OGV sector was conducted, and this is also shown in Fig. 10. It can be seen that the essential flow features at the prediffuser exit are still captured well by the lower spatial resolution of the complete injector sector, and hence this sector size was used in all further measurements. The prediffuser exit comparison in Fig. 11 demonstrates the differences in the development of the OGV wake structure and secondary flow field caused by the IOGV design. This design produces thinner high velocity zones, and a more endwall directed secondary flow with lower levels of residual swirl. As a consequence, the inner endwall boundary layer, in particular, is in better condition, even though the area ratio is 12.5% larger. This overall effect at the prediffuser exit is more apparent in the circumferentially averaged profiles shown in Fig. 12. Circumferential averaging was conducted by averaging data over all measured points at the same radius across either an OGV blade sector or a combustor sector. The averaging was done on an area basis for velocity and pitch angle, but a mass-weighted basis for pressure (pitch angle was defined locally via the ratio of radial to axial components and then area-weighted circumferentially averaged). For the Datum design the axial velocity profile is characterized by relatively thick boundary layers (~20% of the prediffuser exit height) and a noticeable peak at approximately midpassage height. Although this type of profile may feed the injector satisfactorily, the feed to the annuli will be comprised of the poor quality boundary layer flow that will, in turn, compromise the quality of the air delivered to the annuli. For the IOGV design, not only is the flow fully attached for a loading that would traditionally separate, but a high proportion of the flow has migrated outboard, resulting in much thinner and healthier boundary layers (now only approximately 10% of the prediffuser exit height). In addition, the flow pitch angles near the endwalls have increased by 30%, so that the flow is already starting to turn more toward

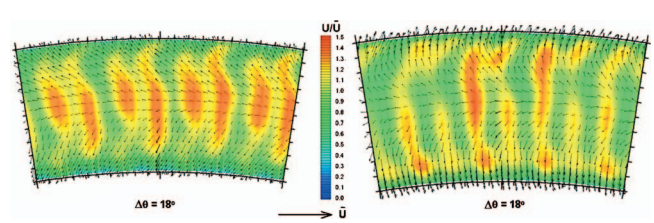

Fig. 11 Axial velocity contours and secondary flow vectors at prediffuser exit (X4) datum design (left); integrated design (right)

Downloaded from http://asmedigitalcollection.asme.org/gasturbinespower/article-pdf/129/1/80/5892814/80_1.pdf by University of Cincinnati user on 05 January 2026

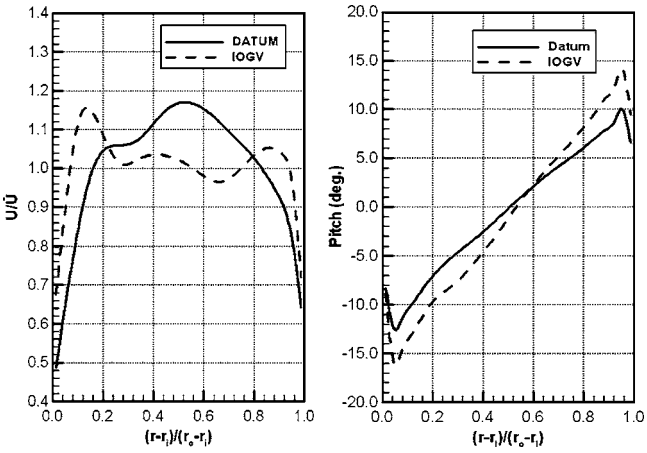

Fig. 12 Axial velocity and pitch angle profiles at X4

the feed annulus at the diffuser exit. This and the lower bulk average velocity due to the higher area ratio of the IOGV prediffuser all contribute positively to reducing dump and turning losses in the downstream region.

In terms of performance at the prediffuser exit, Table 2 presents the mass-weighted total pressure loss and static pressure recovery coefficients. These are quoted with respect to both rotor exit (X2) and OGV exit (X3), allowing a comparison of the combined OGV/prediffuser performance or just the prediffuser in isolation. In both cases the IOGV design incurs a higher overall loss that the Datum. However, the majority of the additional loss occurs within the blade row, with the prediffuser itself incurring only a small rise in loss due to increased secondary flow mixing. Further, Table 2 shows that with its increased prediffuser area ratio the IOGV prediffuser is able to produce a notable increase ($\sim 18\%$) in static pressure recovery. This, in conjunction with an enhanced exit profile, means that this design should result in improved flow distribution and lower losses in the downstream combustor.

Inner (XI5) and Outer (XO5) Annuli. The final aerodynamic aspect examined in this study was the feed quality to the annuli and whether the enhanced prediffuser exit profile and static pressure recovery coefficient of the IOGV design provided any overall system benefit. The interest in placing emphasis on these aspects is that improved annulus feed quality and reduced system loss are likely to be a prime concern of the deeper flame tube designs implied by lean module injectors.

Differences in the annulus flow fields are best revealed by an examination of circumferentially averaged profiles (Fig. 13). The axial velocity profiles are essentially the same for both designs; however, Fig. 13 shows that the pitch and yaw angles of the flow in both inner and outer annuli are different. This is not unexpected as, with reference to Fig. 11, the near endwall flow at prediffuser exit differs noticeably between the two designs, and it is this flow that passes into the annuli. The stream tubes feeding the annuli undergo diffusion between prediffuser exit and annulus entry, which will have a tendency to amplify the differences. Additionally, the fact that the flow is moving to a different radius means that the conservation of angular momentum will cause any swirl present at the prediffuser exit to increase in the inner annulus and decrease in the outer. Figure 13 shows that both pitch and yaw

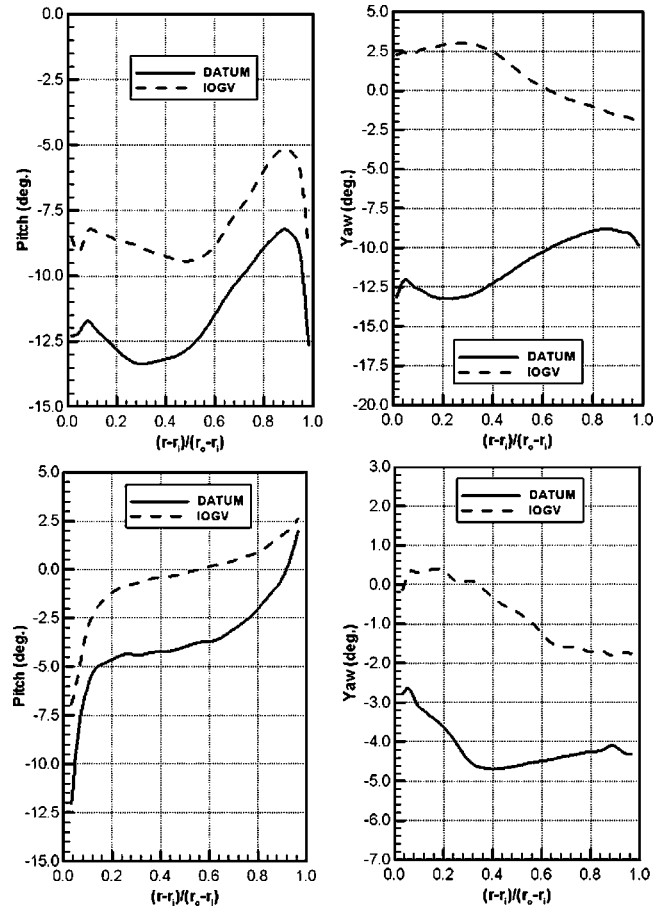

Fig. 13 Circumferentially averaged pitch and yaw angles in annuli: inner (XI5) top; outer (XO5) bottom

angles are reduced in the IOGV design, particularly the latter in the inner annulus, hence improving feed quality to any flame tube features. The final system performance data are presented in Tables 3 and 4.

It is clearly demonstrated that, considering the overall flow path from rotor to annulus flow, the loss to both annuli is significantly reduced. For example, with respect to the OGV exit (X3) the loss coefficient is reduced by 37% and 50% to the inner and outer feed annuli, respectively. Even taking the increased OGV blade loss into account, the system loss (X2-X5) has been reduced by 10% (inner) and 20% (outer), and the two annuli regions are much better balanced. The change in loss for the combined OGV + prediffuser + dump system through to the feed annuli clearly illustrates the benefits to the whole system of the integrated approach, even just one that considers only the OGV/prediffuser assembly. It is worth noting that the effect on the isolated OGV

Table 3 Inner Annulus Coefficients: λ and Cp

Geometry	$\lambda_{X2\text{-}XI5}$	$\lambda_{X3\text{-}XI5}$	$Cp_{X2\text{-}XI5}$	$Cp_{X3\text{-}XI5}$
Datum	0.246	0.252	0.678	0.593
IOGV	0.224	0.159	0.713	0.708

Table 2 Pressure loss λ and pressure recovery Cp

Geometry	$\lambda_{X2\text{-}X4}$	$\lambda_{X3\text{-}X4}$	$Cp_{X2\text{-}X4}$	Cp_{X3-X4}
Datum	0.15	0.055	0.66	0.55
IOGV	0.18	0.062	0.69	0.65

Table 4 Outer annulus coefficients: λ and Cp

Geometry	$\lambda_{X2\text{-}XO5}$	$\lambda_{X3\text{-}XO5}$	$Cp_{X2\text{-}XO5}$	$Cp_{X3\text{-}XO5}$
Datum	0.277	0.317	0.654	0.544
IOGV	0.221	0.152	0.791	0.722

Downloaded from http://asmedigitalcollection.asme.org/gasturbinespower/article-pdf/129/1/80/5892814/80_1.pdf by University of Cincinnati user on 05 January 2026

performance of the lean/sweep blade changes means that such modifications would probably not be considered within a conventional design approach, since these lead to increased loss across the OGV, with the potential benefits to the downstream flow not being considered during the OGV design process. However, in an integrated approach, it is the overall performance that is considered, and in this case, the experimental data show that the increased OGV loss is acceptable because the overall loss (from OGV inlet to combustor feed annuli) has been reduced.

Summary and Conclusions

The present paper has focused attention on the possibility of improving the performance of one particular component of combustor external aerodynamics, namely the prediffuser/dump diffuser combination, by adopting an integrated OGV/diffuser design approach. While various other diffuser alternatives have been suggested in the past (e.g., a fully faired system [17] or a hybrid bled diffuser system [18]), emphasis has been placed here on improving the prediffuser/dump diffuser concept. A fully faired system offers the potential for a significant reduction in loss, but this is acknowledged to be at the expense of system stability. Bled diffusers offer the potential for operation at higher area ratios within a given overall axial length, but their use is limited by the increased complexity of the bleed, and the need to use the bled air efficiently within the engine cycle. Hence, the better stability and simplicity of the prediffuser/dump diffuser concept is still to be preferred and methods for improving its aerodynamic performance are of significant interest.

A detailed experimental study has been presented that has investigated the improvement in combustor external aerodynamics achieved using by an integrated design approach for the OGV/prediffuser components. Following suggestions made in [14], an alternative and integrated OGV/prediffuser design was investigated and compared to a traditional design. Experimental data showed that improvements in both feed quality to the annulus regions and overall pressure loss reductions could be achieved using the integrated approach. The main improvements were as follows: an increased diffuser area ratio from 1.6 to 1.8, static pressure recovery increased by 5% with respect to rotor exit, loss to inner/outer annuli reduced by 10% and 20%. The integrated approach is therefore considered worthy of future investigation and development, particularly its use in optimizing the external aerodynamic arrangements of future low emissions combustors.

Acknowledgment

The authors wish to acknowledge the financial support of the European Commission (Contract No. FP6-AST3-CT-2003-502961, Project No. INTELLECT_DM). The authors would also like to express their appreciation to L. Monk, W. Niven, and A. Fardoe for their help in the construction of the test facility. The helpful technical support provided by A. Barker is also gratefully acknowledged.

Nomenclature

A = passage area
AR = area ratio of prediffuser
c = outlet guide vane chord
Cp = static pressure rise coefficient
h = annulus passage height
L = diffuser length
$\dot{m}$ = mass flow rate
N = rotor speed
P,p = local total or static pressure
R = gas constant for air (perfect gas law)
R_n = nondimensional radius $[(r-r_i)/(r_o-r_i)]$
r = radius relative to rig centerline
r_i, r_o = inner casing, outer casing radius
s = blade pitch
T,t = total or static temperature
U = rotor midpassage blade speed
V_a = rotor midpassage axial velocity
x = axial distance
α = kinetic energy flux coefficient
ϕ = flow coefficient (V_a/U)
ρ = air density
λ = total pressure loss coefficient

Subscripts

Inlet = prediffuser inlet
X1 = rotor inlet traverse plane
X2 = rotor exit/OGV inlet traverse plane
X3 = OGV exit traverse plane
X4 = prediffuser exit traverse plane
XI5 = inner annulus traverse plane
XO5 = outer annulus traverse plane

Superscripts

- = area weighted spatially averaged value
$\sim$ = mass weighted spatially averaged value

References

[1] Klein, A., 1995, "Characteristics of Combustor Diffusers," Prog. Aerosp. Sci., **31**, pp. 171–271.
[2] Stevens, S. J., Harasgama, S. P., and Wray, A. P., 1984, "The Influence of Blade Wakes on Combustor Shortened Pre-diffusers," J. Aircr., **21**, pp. 641–648.
[3] Klein, A., 1988, "The Relation Between Losses and Entry Flow Conditions in Short Dump Diffusers for Combustors," Z. Flugwiss. Weltraumforsch., (12), pp. 286–292.
[4] Barker, A. G., Carrotte, J. F., and Frodsham, C. W., 1997, "The Effect on Combustor Diffuser Performance of Structural OGV/Pre-Diffuser Systems," ASME Paper No. 97-GT-304.
[5] Zierer, T., 1993, "Experimental Investigation of the Flow in Diffusers Behind an Axial Flow Compressor," ASME Paper No. 93-GT-347.
[6] Carrotte, J. F., Young, K. F., and Stevens, S. J., 1995, "Measurements of the Flowfield Within a Compressor Outlet Guide Vane Passage," ASME J. Turbomach., **117**, pp. 29–37.
[7] Ma, H., and Jiang, H., 2000, "Three-Dimensional Turbulent Flowfield Downstream of a Single Stage Axial Compressor Rotor," ASME Paper No. 2000-GT-499.
[8] Barker, A. G., and Carrotte, J. F., 2001, "The Influence of Compressor Exit Conditions on Combustor Annular Diffusers - Part I: Diffuser Performance," J. Propul. Power, **17**, pp. 678–686.
[9] Barker, A. G., and Carrotte, J. F., 2001, "The Influence of Compressor Exit Conditions on Combustor Annular Diffusers - Part II: Flow Redistribution Within the Diffuser," J. Propul. Power, **17**, pp. 687–694.
[10] Karki, K. C., Oechsle, V. L., and Mongia, H. C., 1990, "A Computational Procedure for Diffuser-Combustor Flow Interaction Analysis," ASME Paper No. 90-GT-35.
[11] Koutmos, P., and McGuirk, J. J., 1989, "Numerical Calculations of the Flow in Annular Combustor Dump Diffuser Geometries," Proc. Inst. Mech. Eng., Part C: J. Mech. Eng. Sci., **203**, pp. 319–331.
[12] Shahpar, S., 2005, "SOPHY: An Integrated CFD Based automatic Design Optimisation System," Paper No. ISABE-2005-1086.
[13] Schlüter, J., Wu, X., Pitsch, M., Kim, S., and Alonso, S., 2005, "Integrated Simulations of a Compressor Combustor Turbine Assembly of a Gas Turbine Engine," ASME Paper No. GT2005-68-204.
[14] Barker, A. G., Carrotte, J. F., Luff, J., and McGuirk, J. J., 2003, "Design of an Integrated OGV/Diffuser System," Final Report No. TT03R01, for EU FP5 project, GRD1-2000-25062: "LOPOCOTEP."
[15] Howard, J. H. G., Henseler, H. J., and Thornton-Trump, A. B., 1967, "Performance and Flow Regimes for Annular Diffusers," ASME Paper No. 67-WA/FE-21.
[16] Wray, A. P., and Carrotte, J. F., 1993, "The Development of a Large Annular Facility for Testing Gas Turbine Combustor Diffuser Systems," AIAA Paper No. AIAA-93-2546.
[17] Carrotte, J. F., Denman, P. A., Wray, A. P., and Fry, P., 1994, "Detailed Performance Comparison of a dump and a Short Faired Combustor Diffuser System," Trans. ASME: J. Eng. Gas Turbines Power, **116**, pp. 517–526.
[18] Walker, A. D., Denman, P. A., and McGuirk, J. J., 2004, "Experimental and Computational Study of Hybrid Diffusers for Gas Turbine Combustors," Trans. ASME: J. Eng. Gas Turbines Power, **126**, pp. 717–725.

Downloaded from http://asmedigitalcollection.asme.org/gasturbinespower/article-pdf/129/1/80/5892814/80_1.pdf by University of Cincinnati user on 05 January 2026