48th AIAA Aerospace Sciences Meeting Including the New Horizons Forum and Aerospace Exposition
4 - 7 January 2010, Orlando, Florida

AIAA 2010-1169

Premixed Swirl Combustion and Flashback Analysis with Hydrogen/Methane Mixtures

N. Shelil* A. Bagdanavicius† N. Syred‡ A. Griffiths § P. J. Bowen¶

Cardiff University, The Parade, Cardiff CF24 3AA, Wales, UK

Increased interest in the combustion of hydrogen and hydrogen blends is the driving force in the research of the alternative fuels. The usage of the new hydrogen enriched fuels is unavoidably related to changes in the flame structure, burning velocity and as a consequence - flame stability. Flame flashback and blow off are the important characteristics in practical application.

Flame flashback problems arising due to the use of lean premixed combustion of methane-hydrogen mixtures is discussed in this paper. Firstly, one of the most important flame characteristics, laminar burning velocity S_L, has been calculated for CH_4-H_2 mixtures with different hydrogen content at various pressures, temperatures and equivalence ratios. Chemkin-Pro software package with Premix code has been used for that purpose. A new approximation equation, used to calculate S_L of CH_4-H_2 mixtures having different hydrogen content has been compared with the experimental results and validated. The equation predicts the values of low hydrogen content mixtures quite accurately.

Secondly, the flashback limits have been determined for CH_4-H_2 mixtures using generic swirl burner. New turbulent burning velocity determination method has been applied and tested. The experiment results have been compared with the Bunsen burner experiment results and Fluent computations. It has been found that hydrogen enriched methane flames are more prone to flashback, although the blow off limits are extended. This is clearly due to the increased burning velocity of the methane-hydrogen gas mixture.

Nomenclature

A	=	Model constant
A_f	=	Flame front area
B	=	Swirl burner swirler slot width, m
c	=	Progress variable
C_D	=	Coefficient
Da	=	Damkohler number
D_e	=	Swirl burner exit diameter
D_{eq}	=	Equivalent nozzle diameter
D_i	=	Swirl burner injector diameter
D_v	=	Swirl burner internal swirler diameter
G_x	=	Axial flux of axial momentum
G_θ	=	Axial flux of angular momentum
H	=	Swirl burner swirler height, m
k	=	Turbulent kinetic energy
l_0	=	Integral length scale, m
$\dot{m}$	=	Mass flow rate, kg/s
q'	=	Averaged turbulence intensity, m/s

*Research Student, Cardiff School of Engineering, The Parade, Cardiff CF24 3AA, Wales, UK.
†Marie Curie Researcher, Cardiff School of Engineering, The Parade, Cardiff CF24 3AA, Wales, UK, AIAA member
‡Professor, Cardiff School of Engineering, The Parade, Cardiff CF24 3AA, Wales, UK, AIAA member
§Professor, Cardiff School of Engineering, The Parade, Cardiff CF24 3AA, Wales, UK.
¶Professor, Cardiff School of Engineering, The Parade, Cardiff CF24 3AA, Wales, UK.

Copyright © 2010 by Cardiff University. Published by the American Institute of Aeronautics and Astronautics, Inc., with permission.

S	=	Swirl number
S_c	=	Reaction progress source term, s^{-1}
Sc_t	=	Turbulent Schmidt number
S_L	=	Laminar burning velocity, m/s
S_T	=	Turbulent burning velocity, m/s
T	=	Temperature, K
t	=	Time, s
u, v, w	=	Axial, radial and tangential velocity, m/s
u', v', w'	=	Fluctuating axial, radial and tangential velocity component, m/s
$\vec{v}$	=	Velocity vector
$\dot{V}$	=	Volume flow rate, m^3/s
X	=	Mole fraction
Y	=	Mass fraction
α	=	Thermal diffusivity, m^2/s
δ_L	=	Laminar flame thickness, mm
ϵ	=	Turbulence dissipation rate
ϕ	=	Equivalence ratio
ρ	=	Density, kg/m^3
ω	=	Specific turbulence dissipation rate

Subscript

rms	=	root mean square
st	=	stoichiometric
P	=	products
R	=	reactants

I. Introduction

HYDROGEN is considered as one of the most promising alternative to existing fuels. However the high cost of production of pure hydrogen, safety issues and different combustion characteristics restrict its commercial usage. Instead of using pure hydrogen, hydrogen-methane blends receive more attention as an alternative fuel for power generation applications. The main reason of using hydrogen is related to the reduction of CO_2 emissions so decreasing global warming effects. The second reason is to enhance the utilization of gasified biomass and other by-product gases derived from some industrial processes in the form of producer gases containing mainly H_2 and CO which can also be mixed with methane.[1,2] The third reason is to improve air quality by replacing petrol or diesel in transport.

While hydrogen enriched fuel combustion technologies are under development, Lean Premixed (LP) combustion allowing the reduction of pollution emissions, particularly NO_x, is widely used in practical applications. LP combustion is mainly achieved by using swirl-stabilised combustion. It reduces the flame temperature so reducing thermal NO_x emissions. However LP combustion is often accompanied by stability problems. Premixed flames are naturally more susceptible to static and dynamic instability due to a lack of inherent damping mechanisms.[3] Therefore the understanding of swirl-stabilised combustion is an important prerequisite for the development of novel technologies.

Combustion in swirl burners has been studied for decades and the reviews can be found in the works of Syred,[4,5] Gupta et al.,[6] Huang et al.[7,8] and others. Vanoverberghe[9] and Coghe et al.[10] have demonstrated the reduction of emissions by increasing swirl, producing flames stabilized by the surrounding structures, such as inner and outer recirculation zones, formed as a consequence of the dynamics of the swirling mechanism. Huang et al.,[7] and Huang and Yang[8] studied combustion dynamics and instability in lean premixed swirl-stabilized combustors. They concluded that in combustion systems the dominant mechanism responsible for driving unsteady flow oscillations arise from either heat release or gasdynamic fluctuations, or both.[8]

Valera-Medina[11,12] investigated coherent structures in swirl flows. He performed flashback analysis[11] for swirl burner using different exit geometries and concluded that there are two types of flashback. Type 1 flashback occurred due to the backwards propagation of Central Recirculation Zone (CRZ), and type 2 flashback occurred due to radial propagation into the outer swirl chamber from the exhaust sleeve. He argued

that type 2 flashback occurred as a consequence of S_T, boundary layer flame propagation and Combustion Induced Vortex Breakdown (CIVB).

CIVB and its effect on flame flashback has been discussed by Kröner et al.[13] They stated that there are four causes initiating flame flashback in swirl burners:

- Flame propagation in the boundary layer;
- Turbulent flame propagation in the boundary core flow;
- Combustion instabilities;
- Combustion induced vortex breakdown.

They derived the flame quench factor as the ratio of flame chemical time and mixing time, and emphasised that using this factor, flashback behaviour of the burner can be characterised.

Blowout, flashback and stability issues have been discussed by Lieuwen et al.[14] They have used the Damköhler number, which can be expressed as inverse of quench factor, to relate the blowout limits, and have shown that blowout occurs at $Da = 0.6$ for a number of permutations of $CO/H_2/CH_4$ blends.

Most analysis conducted for turbulent and swirl flames relies on the laminar flame characteristics, such as: laminar burning velocity S_L and laminar flame thickness. During the last decades significant progress has been achieved in understanding of methane as well as hydrogen flames. While the combustion characteristics of pure mixtures of methane-air and hydrogen-air have been extensively studied over the years, the knowledge regarding the combustion of mixtures containing both methane and hydrogen is limited.[15] Experimental data at ambient conditions[15,16] and at elevated pressure and temperature conditions[17,18] can be found in literature. Numerical investigations[19–21] have been conducted to define hydrogen addition effect. All investigations of laminar and turbulent flames show an increase of the burning velocities as a result of hydrogen addition to methane.

In this paper the experimental results and modelling of a generic swirl burner are discussed. Firstly, the laminar flame speed of methane-hydrogen mixtures are calculated using Chemkin software. The results are compared with a new approximation equation[22] for calculating the laminar flame speed for methane-hydrogen mixtures. Then the experimental results obtained from generic swirl burner of methane-hydrogen mixtures at atmospheric conditions are discussed and compared with Fluent numerical calculations, and with Bunsen burner results, obtained at elevated temperature and pressure conditions.[23]

II. Experimental facilities and modelling

Two series of experiments were carried out to investigate H_2 effect on methane burning velocity and flame stability. Two methane - hydrogen mixtures: 85% methane - 15% hydrogen and 70% methane - 30% hydrogen, were tested over a wide range of conditions. The generic swirl burner was used to investigate flame stability at atmospheric conditions (1 bara, 293 K). A Bunsen burner was used to calculate the turbulent burning velocity of premixed gas mixtures at 473 K temperature and 3 bara pressure. Chemkin and Fluent have been used to model laminar and turbulent flames. The list of ivestigated mixtures and conditions is presented in Table 1.

Table 1. Investigated gas mixtures and conditions

Gas mixture	Bunsen burner tests	Swirl burner tests	Chemkin	Fluent
100%CH_4	3 bar, 473 K	1 bar, 293 K	1, 3 bar and 300, 473, 673 K	1 bar, 293 K
85%CH_4-15%H_2	3 bar, 473 K	1 bar, 293 K	1, 3 bar and 300, 473, 673 K	1 bar, 293 K
70%CH_4-30%H_2	3 bar, 473 K	1 bar, 293 K	1, 3 bar and 300, 473, 673 K	1 bar, 293 K
50%CH_4-50%H_2	-	-	1, 3 bar and 300, 473, 673 K	-
30%CH_4-70%H_2	-	-	1, 3 bar and 300, 473, 673 K	-
15%CH_4-85%H_2	-	-	1, 3 bar and 300, 473, 673 K	-
100%H_2	-	-	1, 3 bar and 300, 473, 673 K	-

A. Laminar flame speed modeling

Laminar flame burning velocity is an important characteristic in turbulent flame research. S_L of a premixed flame is defined as the propagation velocity of a plane, undisturbed flame without heat loss and

buoyancy effect.[24] It is difficult to produce such flames experimentally, however this definition is suitable for numerical calculations using detailed kinetic reaction schemes. Laminar burning velocity is constant under specific pressure and temperature.

Unstretched laminar burning velocity of methane - hydrogen flames have been modelled using the Chemkin-Pro[25] software package. It consists of a set of different application models, which are used to solve various chemical kinetic problems."Flame Speed Calculator" reactor model has been used to determine the laminar speed of one-dimensional freely propagating flame. The Premix[26] code, developed by Sandia National Laboratories, has been used to run this model.

"Flame Speed Calculator" model with "Parameter Study Facility" option has been utilised to perform the numerical burning velocity calculations. The model simulates a freely propagating flame in which the point of reference is a fixed position on the flame, thus the flame speed is defined as the velocity of unburned gas moving towards the flame1. This model uses mixture averaged transport properties with correction velocity formulation. Equivalence ratio has been chosen as variable parameter. A number of runs have been performed for different temperature and pressure conditions. The domain length of 10 cm has been specified and the grid of 200 points has been selected, which has facilitated faster convergence. Adaptive grid control parameter based on gradient GRAD = 0.1 and adaptive grid control parameter based on curvature CURV = 0.1 have been selected. The initial grid based on temperature profile estimate has been specified. Mixture averaged transport correction velocity formalism, with automatic estimation of temperature profile options, has been used.

"Flame Speed Calculator" reactor model requires the set of gas phase kinetic data, species thermal properties data and species transport properties data to be chosen before calculation. There are many chemical kinetic mechanisms developed for combustion research. Different kinetic models should be used for different gas mixtures as no one mechanism can be considered as universal model for all possible gas mixtures.

GRI-Mech[27] mechanism is often used in the combustion research of hydrocarbons. It considers 53 species and 325 elementary reactions. This mechanism has been developed to investigate methane and natural gas flames and has been validated at various pressure and temperature conditions. The researchers have reported that this mechanism could also be suitable to some extent for biomass gasification-derived producer gas,[28] methane hydrogen mixtures[20,21] and for hydrogen air mixtures[29,30] at atmospheric conditions. However there have been larger discrepancies observed between experimental data and numerical calculations using GRI-Mech kinetic mechanism for pure and diluted hydrogen at higher pressures.[29,31]

Another well known kinetic mechanism, which has been developed by University of California in San Diego, is widely used. This kinetic mechanism considers 46 species and 235 elementary reactions. Lafay et al.[32] has utilised GRI-Mech and San Diego mechanisms to calculate flame thickness. They have proved that these mechanisms are in good agreement with the experimental data at the atmospheric conditions at equivalence ratio above 0.55.

Ströhle and Myhrvold reported[29] that Li et al.[33] and O'Conaire et al.[31] chemical kinetics mechanisms for hydrogen provide more accurate results in comparison with experimental data at elevated pressures, whilst GRI-Mech underpredicts laminar flame speed considerably. They also showed that the San Diego[34] mechanism yields reasonable results for helium diluted high pressure hydrogen flames. Sarli and Benedetto[1] found that GRI-Mech kinetic mechanism, used in their simulation, underpredicted laminar burning velocity at high hydrogen content in the methane-hydrogen mixture. They identified three different regimes in flame propagation depending on hydrogen mole fraction in fuel mixture.

The comparison of GRI-Mech and San Diego kinetic mechanisms is presented in Fig. 1. GRI-Mech and San Diego results are almost identical for the 70% methane and 30% hydrogen mixture. The largest discrepancies between these two models can be observed in the region of equivalence ratio below 1 and above 1.4, although in the region from 1 to 1.4 GRI-Mech produces higher flame speed results. At higher hydrogen quantities in the mixture GRI-Mech underpredicts flame speed. This supports similar findings of other researchers.[29]

Similar comparison has been udertaken for pure hydrogen. The results of these calculation are presented in Fig. 1. Three mechanisms: O'Conaire et al. mechanism, San Diego mechanism and GRI-Mech, have been compared at 7 bara 473 K and 673 K. The O'Conaire et al. mechanism has been developed to simulate the combustion of hydrogen and oxygen in a variety of combustion environments and over a wide range of temperatures, pressures and equivalence ratios. The kinetic mechanism comprises of 8 species and 19 elementary reactions for a temperature range from 298 to 2700 K, the pressure from 0.05 to 87 atmospheres,

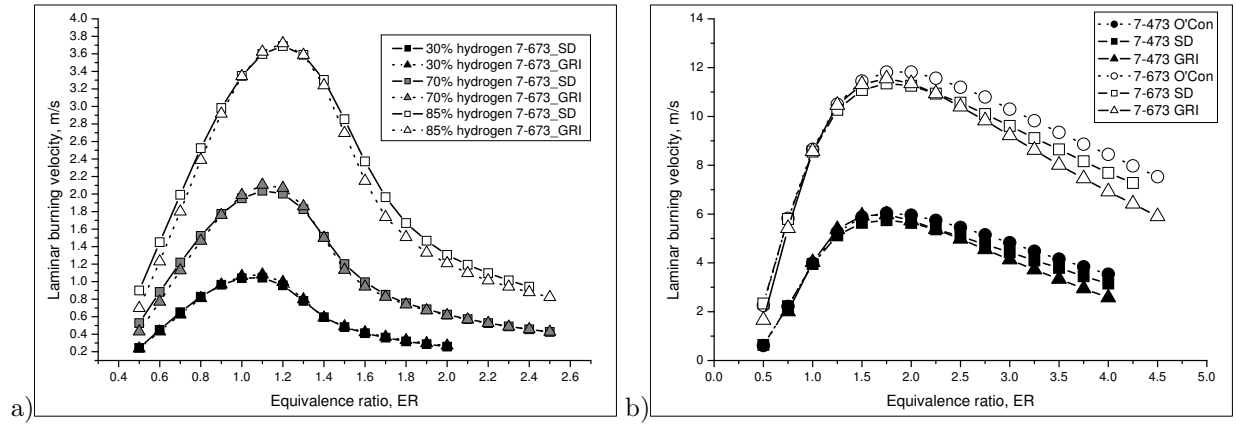

Figure 1. Chemkin calculated S_L: a) methane - hydrogen mixtures at 7 bara and 673 K, b) hydrogen at 7 bara and 473 K and 7 bara and 473 K. Numbers represent hydrogen amount in the mixture; O'Con - O'Conaire mechanism, SD - San Diego mechanism, GRI - GRI-Mech mechanism.

and the equivalence ratios from 0.2 to 6. The GRI-Mech mechanism underpredicts hydrogen flame speed in the region of equivalence ratio up to 1 and above 1.5 in comparison with O'Conaire mechanism. The San Diego mechanism predictions are more accurate in comparison with GRI-Mech whilst O'Conaire mechanism predicts the highest flame speed.

As the hydrogen content in the mixture is not high (up to 30% by volume) it is believed that methane combustion kinetics prevail in the combustion process. Thus taking into account the findings of other researchers it has been decided to use GRI-Mech mechanism for all methane - hydrogen mixtures.

B. Turbulent premixed combustion modelling

In premixed combustion, fuel and oxidizer are mixed at the molecular level prior to ignition. It is assumed that combustion takes place in a thin flame sheet. The combustion reactions take place and the flame front moves from premixed reactants to products. For subsonic flows, the overall rate of propagation of the flame is determined by both the laminar flame speed and the turbulent eddies. The laminar flame speed is determined by the rate that species and heat diffuse upstream into the reactants and burn.

The flame front propagation is modelled by solving a transport equation for the density-weighted mean reaction progress variable c:

$$\frac{\partial}{\partial t}(\rho c) + \nabla \cdot (\rho \vec{v} c) = \nabla \cdot \left(\frac{\mu_t}{Sc_t} \nabla c \right) + \rho S_c \tag{1}$$

The progress variable is defined as a normalized sum of the product species, therefore $c = 0$ for unburnt mixture, and $c = 1$ for products. The value of c is defined as a boundary condition at all flow inlets. The mean reaction rate is modelled as:[35]

$$\rho S_c = \rho_R S_T \left| \nabla c \right| \tag{2}$$

The S_T is computed using a model for wrinkled flames:[35]

$$S_T = A \cdot (u')^{3/4} S_L^{1/2} \alpha^{-1/4} l_0^{1/4} = A u' Da^{1/4} \tag{3}$$

The integral length scale l_0 is modeled using the equation:

$$l_0 = C_D \frac{(u')^3}{\epsilon} \tag{4}$$

The recommended value $A = 0.52$ and coefficient $C_D = 0.37$ have been used.[35]

Non-adiabatic premixed combustion model is considered. The energy transport equation is solved in order to account for any heat losses or gains within the system. These losses/gains may include heat sources due to chemical reaction or radiation heat losses.

The shear-stress transport (SST) $k-\omega$ model has been used for modelling turbulence. It has feature that gives the SST $k-\omega$ model an advantage in terms of performance over both the standard $k-\omega$ model and the standard $k-\epsilon$ model. Other modifications include the addition of a cross-diffusion term in the ω equation and a blending function to ensure that the model equations behave appropriately in both the near-wall and far-field zones.[36]

C. Generic swirl burner tests

Flame stability and flashback experiments were conducted using the generic swirl burner designed and commissioned at GTRC. The burner was designed to produce premixed, non premixed and partially premixed flames, although only premixed combustion was considered in this programme. Air and fuel flows were measured simultaneously using suitably ranged Coriolis flow meters. The tests were conducted at atmospheric conditions.

The burner construction is shown in Fig. 2. Air/fuel gas mixture is supplied through a tangential inlet pipe into a plenum chamber, then via 4 tangential inlets into the swirl chamber forming the main part of the burner. The fuel injector, which is normally used for the non premixed and partially premixed flames, is not used in our experiments, but is left in place as being representative of industrial practice, where it might for instance be used for liquid fuel injection. Such a burner design normally produces a Central Recirculation Zone (CRZ), which plays an important role in flame stabilisation. The effect of CRZ is reduced by fitting a constrain in the nozzle, which also helps to reduce flashback.

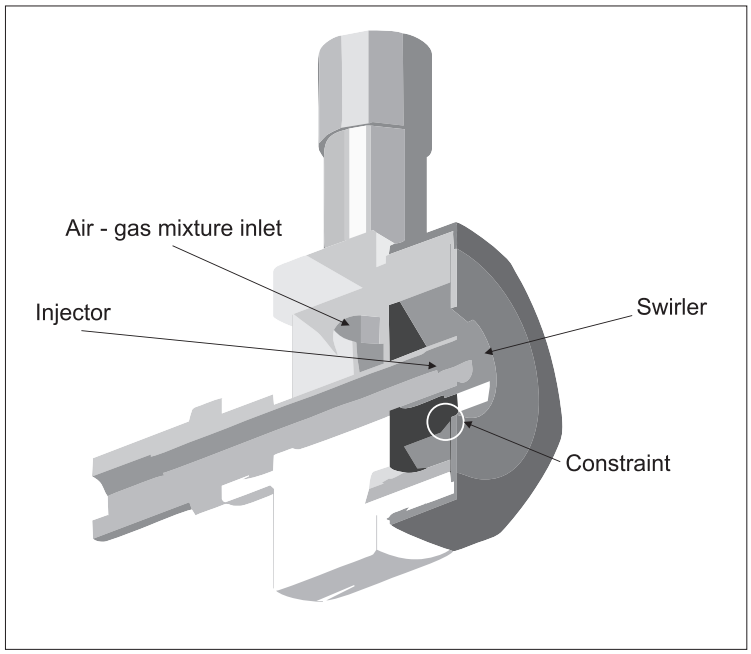

Figure 2. Generic swirl burner

Swirl burners and combustors are usually characterised by the swirl number. The swirl number, S, is the variable non-dimensional number representing axial flux of angular momentum, G_θ, divided by axial flux of axial momentum, G_x, and equivalent nozzle radius $D_{eq}/2$:[5]

$$S = \frac{G_\theta}{G_x D_{eq}/2} \tag{5}$$

However, as the flow patterns in swirl burners are complicated, it is difficult to calculate a specific swirl number without simplification. The swirl number varies with the burner, because the axial and tangential flow rates change at different levels within the burner. It is hence generally impractical to use local values of the swirl number, since this would require detailed velocity, and pressure measurements. To determine a more practical and comparable value, various simplifications have been used, resulting in the geometric swirl number S_g.[6] The S_g, calculated based on the geometrical configurations, was 1.47 for the burner studied in this programme.

D. Bunsen burner experiments

Elevated temperature and pressure experiments were performed in the Gas Turbine Research Centre (GTRC) of Cardiff University. Burning velocity measurements were performed in High Pressure Optical Combustor (HPOC) using a horizontally mounted burner firing into an inner combustion chamber, enclosed within an optical pressure casing (Fig. 3). More detail description of the burner construction can be found elsewhere.[23]

Two different measurement techniques were applied. A non-intrusive 2-D laser diagnostic technique, Laser Doppler Anemometry (LDA), was utilised to determine the velocity profile and turbulence characteristics at the exit of the burner at elevated pressures and temperatures. The velocity and turbulence profiles of isothermal air flow, seeded with aluminium oxide particles, were measured downstream of the burner exit across the burner axis on the centreline plane.

Planar laser tomography was applied in order to measure the turbulent burning velocity at a range of temperatures and pressures. This technique is based on the observation that the density of the products is lower than that of the reactants. Images of the flame front were recorded using a high speed camera. More detail description of calculation methods and experimental techniques can be found elsewhere.[23]

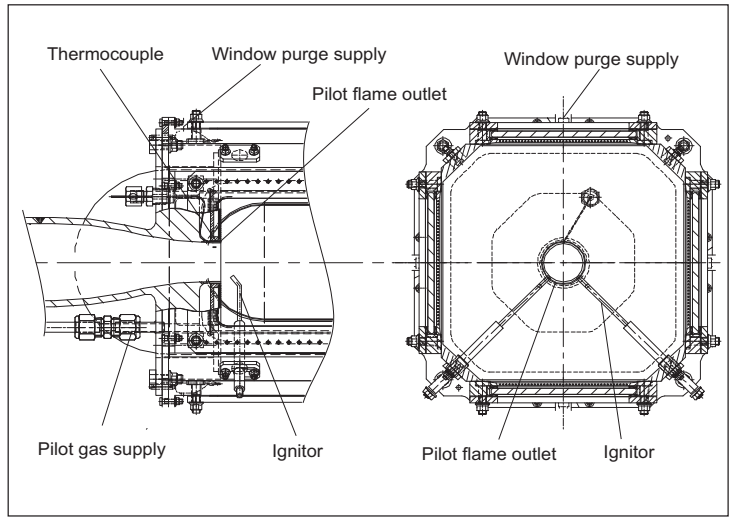

Figure 3. High Pressure Optical Combustor

III. Laminar burning velocity modelling results

Laminar burning velocities S_L of lean and rich methane-hydrogen mixtures have been calculated using Chemkin at different pressures and temperatures. A new approximation method, proposed by Shelil et al.,[22] has been used to compute S_L for different methane - hydrogen mixture ratios and compared with Chemkin calculations. This method can be used to calculate the laminar burning velocity of the mixture, when the S_L of pure gases and mass fractions Y are known. Having S_L values of pure gases at required ambient conditions and equivalence ratio known, the approximation equation could be used.

$$S_{L,mix} = Y_{H_2} S_{L,H_2} + (1 - Y_{H_2}) S_{L,CH_4} \tag{6}$$

Here the mass fraction of hydrogen Y_{H_2} in the mixture, laminar burning velocity of hydrogen S_{L,H_2} and methane S_{L,CH_4} of a particular equivalence ratio ϕ. The calculated laminar burning velocity of the methane-hydrogen mixture $S_{L,mix}$ for the same ϕ will be found. For instance calculating the S_L of 70% CH_4 - 30% H_2 stoichiometric mixture ($\phi = 1$), the S_L of CH_4 and H_2 stoichiometric air - gas mixtures are used as an input in equation 6.

Similar approaches, which simplify the calculation of S_L for the gas mixture have been discussed elsewhere.[1,22] The comparison of Chemkin calculations and laminar burning velocity results for the mixtures obtained from the equation 6 for different gas mixtures at $\phi = 1$ at 1 bar and 3 bar pressures and different temperatures is presented in Fig. 4.

It is seen from the graphs that the equation 6 predicts the S_L values fairly well especially for the mixtures with lower hydrogen quantities in the mixture (mole fraction $X < 0.5$) and lower pressure. For higher hydrogen quantities the difference is larger. At higher pressure (Fig. 4, b) the calculated S_L values computed using equation 6 are higher than Chemkin predictions.

To compare the equation 6 predictions with experimental results the Hermanns[15] data have been used.

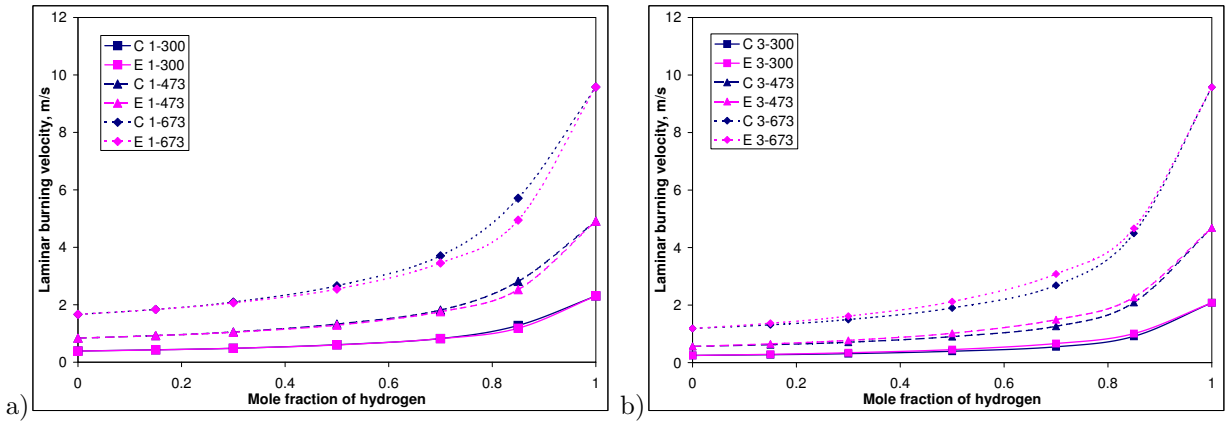

Figure 4. Laminar burning velocity of stoichiometric mixtures obtained from Chemkin computations (C) and using equation 6 (E): a) at 1 bar pressure, 1-300 represents 1 bara 300 K conditions; b) at 3 bar pressure, 3-300 represents 3 bara 300 K conditions.

Hermanns[15] used heat flux method to calculate the laminar burning velocities of methane - hydrogen mixtures with air. The comparison of Chemkin prediction, calculation results using the equation 6 and Hermanns experiments are presented in Fig. 5. It is seen from the graph that difference between experimental results and the results calculated from equation 6 is not significant.

To validate the equation for the higher hydrogen content mixtures the data of Ilbas et al.[16] has been used as a reference. The graph of experimental values[16] and calculations using the equation 6 is presented in Fig. 6. The experimental S_L values of 100% methane and 100% hydrogen has been taken as input values in equation 6. It is seen from the graph that equation predicts S_L fairly well for low hydrogen content mixtures ($X < 0.5$). For higher hydrogen content mixtures the difference between results is considerably larger. Therefore for transition ($0.5 < X < 0.9$) and methane-inhibited hydrogen combustion zones ($0.9 < X < 1$), as defined by di Sarli and di Benedetto,[1] more sophisticated formula is rquired.

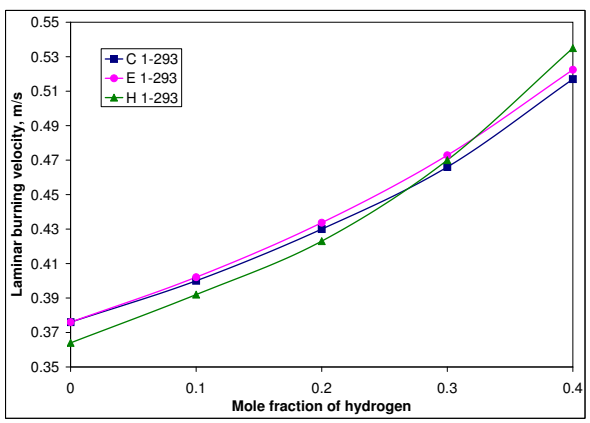

Figure 5. Comparison of S_L data obtained from Chemkin (C), equation 6 (E) and Hermanns[15] (H) experimental resuts at atmospheric conditions, $\phi = 1$.

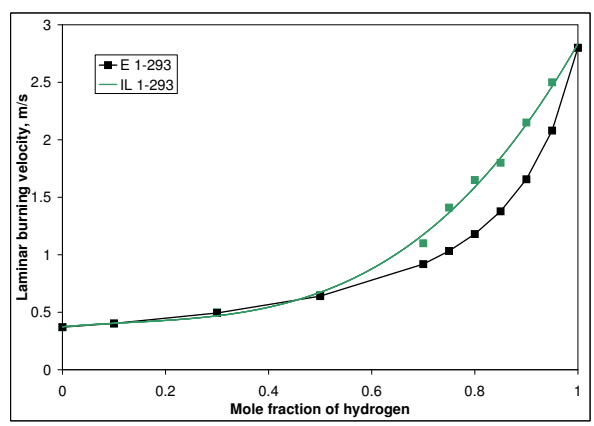

Figure 6. Comparison of S_L data obtained from the equation 6 (E) and Ilbas et al.[16] (IL) experimental resuts at atmospheric conditions, $\phi = 1$.

However the equation 6 could be a useful tool for calculation of S_L for low hydrogen content methane - hydrogen mixtures at atmospheric and elevated temperature and pressure conditions.

Fluent was used for the simulation of premixed combustion. The boundary conditions were chosen to be 700 K for all walls. Simulations were not sensitive to this value apart from the exit tip of the burner. More detailed analysis of the results and discussions on numerical modeling can be found elsewhere.[37]

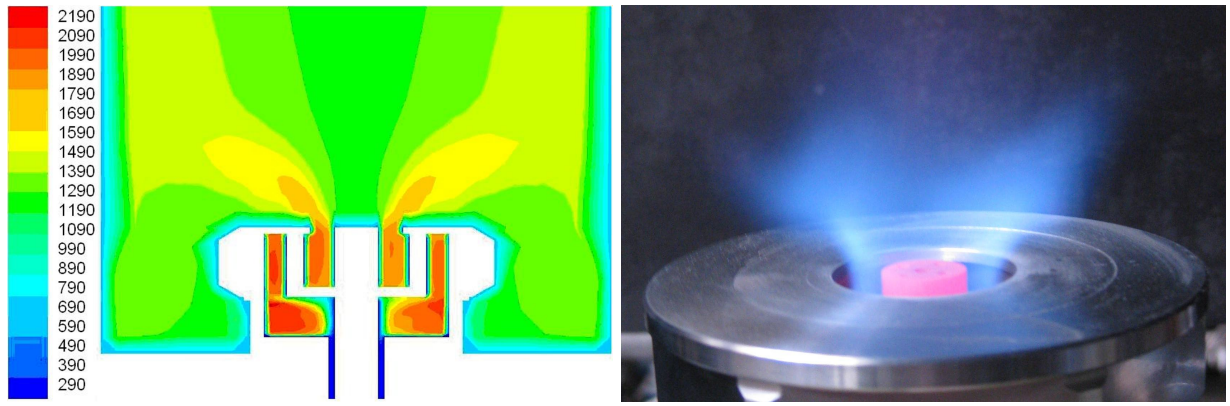

Figure 7. Flashback of 85% methane - 15% hydrogen mixture in model and experiments, $\dot{m}$ = 2.46 g/s, ϕ = 0.82

IV. Experiments in a generic swirl burner at atmospheric conditions

Flame stability depends on the operating pressure, initial temperature, equivalence ratio and total mass flow rate of the premixed mixture.[38] The experiments were performed for premixed methane-hydrogen flames at atmospheric conditions to measure the stability limits of the flame for a particular generic burner. In the context of flashback for this generic swirl burner (geometric swirl number 1.47) the size and shape of the Central Reverse Flow Zone (CRZ) is crucial as in high velocity flows the flame initially stabilizes on the CRZ boundary. Under isothermal conditions for this swirl number a bulbous CRZ forms just past the exhaust and the fuel injector. This CRZ then typically forms an extension to its base which consists of a long columnar structure which passes into the burner to the backplate.

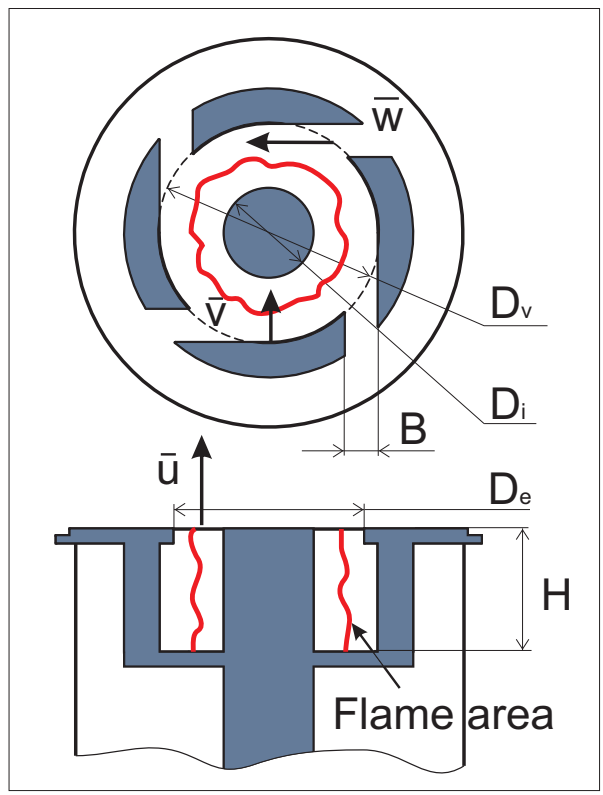

Figure 8. Generic swirl burner

Premixed combustion especially can virtually eliminate this CRZ as the increased axial flux of angular momentum reduces the effective swirl number to below the critical value for vortex breakdown and CRZ formation of ~ 0.5. Maximum effects occur around equivalence ratios $\phi \approx 1$ at maximum heat release. As the equivalence ratio is weakened vortex breakdown can occur, a CRZ forms, which gradually increases in strength so that at very weak mixtures the structure tends to that of the isothermal state. The problem this brings is that for lean combustion the flame can burn not only in the exhaust but on the CRZ boundary surrounding the fuel injector. Here we consider the flashback of these flames radially to the tangential inlets and beyond. This condition represents the system behaviour both with and without the fuel injector. In this system, flashback was more pronounced for lean combustion than for rich.

As seen in Fig. 7, the CRZ and flame front can extend over the fuel injector to the baseplate due to the extension of the CRZ over the fuel injector at weak equivalence ratios. This is undesirable and is a precursor

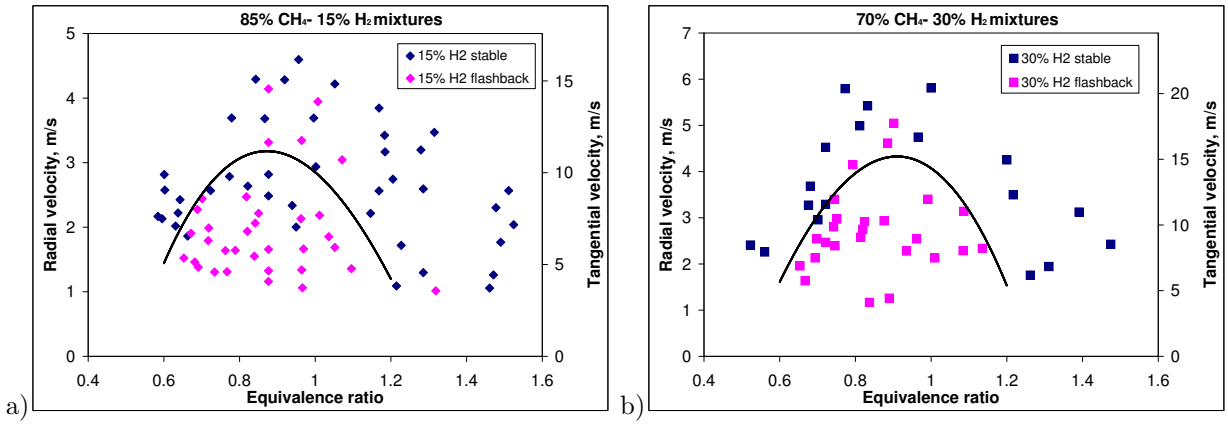

Figure 9. Flashback radial velocities in generic swirl burner: a) 85% methane - 15% hydrogen mixture; b) 70% methane - 30% hydrogen mixture.

to full flashback. The phenomena is often referred to as Combustion Induced Vortex Breakdown (CIVB). Techniques for elimination are discussed elsewhere.[13]

Hydrogen addition increased flame stability by reducing flame blow off. Similar findings were reported elsewhere,[14,39] however this does then worsened flame flashback susceptibility due to increase of S_L and S_T.

Flashback occurs in the regions where turbulent flame propagation velocity exceeds the gas mixture supply streamlines. Therefore the flashback could be avoided if the flame speed and gas velocity could be kept in balance just above the burner exit. In the swirl burner the gas mixture flow velocity could be expressed as the components of axial u, radial v and tangential w velocities. These velocity vectors are presented in the schematic burner drawing Fig. 8. Based on the experimental data u, v and w were calculated from the known mass flow rate and gas mixture density. Axial, radial and tangential velocity in the inlets are presented in the following three equations:

$$u = \frac{\dot{m}}{0.25\pi\rho(D_e^2 - D_i^2)} \tag{7}$$

$$v = \frac{\dot{m}}{0.5\pi\rho H(D_v + D_i)} \tag{8}$$

$$w = \frac{\dot{m}}{4\rho HB} \tag{9}$$

The radial velocities of 85% CH_4 - 15% H_2 and 70% CH_4 - 30% H_2 vs ϕ are plotted in Fig. 9. The two regions of stable flame and flashback are defined and separated by the lines, with values above representing stable conditions and those below representing flashback.

Testing all mixtures, both stable and flashback flames were observed. For both mixtures 85%CH_4 - 15% H_2 and 70% CH_4 - 30% H_2 under certain conditions the CRZ and flame extended over the fuel injector. The highest velocity levels for flashback were observed at $\phi = 0.8 - 0.9$ for all mixtures. In general it was observed that the velocities, at which flashback occurs, increased with increasing H_2 concentration in methane. H_2 addition increases the laminar and turbulent burning burning velocity,[18,23] therefore higher velocities are required to stabilise the flame and avoid flashback.

V. The comparison of test results from generic swirl burner and Bunsen burner

After the first flashback, the flame stabilised in the region around the injector as seen in the schematical drawing Fig. 8. In several tests, especially with higher hydrogen quantities secondary flashback was observed,

where the flame propagated through the swirler slots upstream. When the flame stabilised around the injector, the turbulent flame speed was balanced by the gas flow velocity, therefore the turbulent flame front was established somewhere in the middle region of the swirl chamber between the injector and swirler vanes. As the flame front remained in relative stability, the turbulent flame burning velocity could be derived from the equation:

$$S_T = \frac{\dot{m}_R}{\rho_R \cdot A_f} = \frac{\dot{V}}{A_f} \tag{10}$$

Here the flame front area could be approximated as $A_f = 0.5\pi H(D_v + D_i)$. Therefore it can be concluded that $S_T \approx v$ and these values can be compared directly. Similar analysis applied for methane - carbon dioxide mixtures have been reported elsewhere.[40]

The comparison of our experimental values, obtained using the Bunsen burner at elevated pressure and temperature conditions,[23] generic swirl burner radial velocity approximations and numerical S_T computations are represented in Fig. 10. The S_T and v have been normalised by a normalisation factor as explained elsewhere.[23] The coding "3-473" represents 3 bara and 473 K preheated unburned gas temperature conditions, and "15H2" represents $85\%CH_4 - 15\%H_2$ gas mixture, and "30H2" represents $70\%CH_4 - 30\%H_2$ gas mixture in the legend key. For numerical S_T computations the position at the burner exit have been taken, where the progress variable $c = 0.5$.

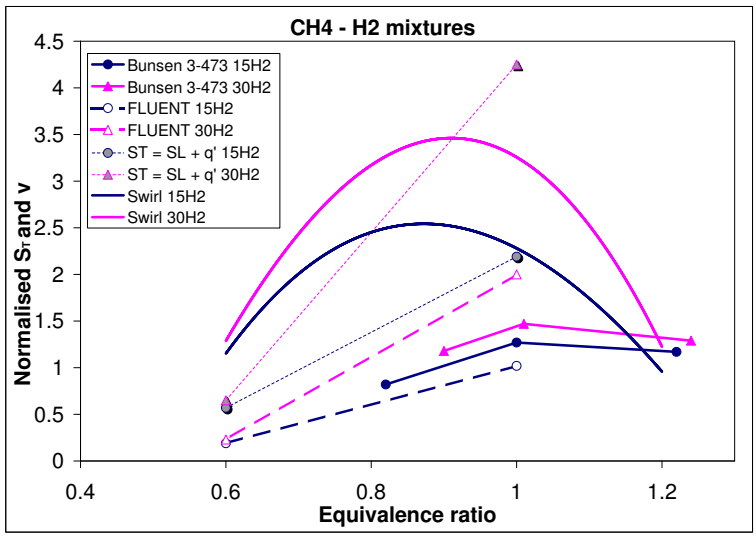

Figure 10. Comparison of experimental values from experiments of generic swirl burner tests at atmospheric conditions, Bunsen burner experiments at elevated temperature and pressure, Fluent computations, and turbulent combustion model $S_T = S_L + u'$.

Considerable difference between S_T obtained from Bunsen burner and v from swirl burner is observed in Fig. 10 at $\phi = 0.8 - 1.1$. One obvious contributory explanation is that very different flame structures are compared, therefore some incompatibility is expected. Bunsen burner flames belong to "envelope" category flames and have different flame wrinkling process than swirl flames.[41,42] Another important considerations are the uncertainty in deriving the flame front area for swirl burner and the turbulence intensity, which has not been measured, but only modelled.

It was observed that the flame front is corrugated, and the exact position could not be easily identified. Our assumption was to take the flame front position as being located half way between the fuel injector radius and the burner exit radius (Fig. 8), this being based purely from visual interpretation.

The definition for the turbulence characteristics for the Bunsen burner experiments have some uncertainties in themselves. The relative turbulence intensity for Bunsen burner isothermal flows at elevated temperature and pressure has been found to be around 15-20%.[23] For the swirl burner, as no measurements have been possible to date, the turbulence kinetic energy has been computed using CFD at isothermal conditions in the middle of the burner, where the assumed flame front is located. The turbulence intensity q' calculated from the turbulence kinetic energy has been found to be in the region of 0.6 - 4.83 m/s for CH_4-H_2 mixtures. Therefore applying simple approximation $S_T = S_L + q'$, developed from Damköhler theory, the values of S_T can be readily calculated. The grey marks and dotted lines in Fig. 10 represent these normalised S_T values. It is seen that this simplified theory underpredicts turbulent burning velocity for lean mixtures, but the results are much closer to the experimental values at equivalence ratio between 0.9 and 1.0, although for $70\%CH_4 - 30\%H_2$ the predicted S_T is higher than radial velocity v. It is due to a very high turbulence kinetic energy modelled by Fluent. Similar results have been found for methane - carbon dioxide mixtures.[40]

Numerical S_T computation via CFD, evaluated at the burner exit under the same conditions as the swirl burner experiments, where the progress variable $c = 0.5$, show much lower values than the radial velocity results, Fig. 10. It appears that Fluent model does not predict burning velocities particularly well for this swirl burner, although for Bunsen burner the model predictions are reasonably accurate.[23,40]

VI. Conclusions

The laminar burning velocity approximation method for methane - hydrogen mixtures has been discussed and comparison with Chemkin modelling tool has been performed. The investigation of methane - hydrogen flames in a generic swirl burner at atmospheric conditions has been conducted and the results from swirl burner experiments have been compared with Bunsen burner experiments.

1. The laminar burning velocity approximation equation, based on the mass fraction of the gas which compose the mixture, for methane - hydrogen mixtures, proposed by Shelil et al.[22] has been investigated and compared with the experimental results. The approximation produces quite accurate results for the low hydrogen content mixtures and could be used as a tool for practical calculations when the mixture composition and the S_L of pure mixtures are known. However for larger hydrogen content mixtures more accurate approximation equation should be developed.

2. A generic swirl burner has been developed and used to test flame stability and flashback limits. The experiment results have shown that H_2 addition increases the flame flashback possibility primarily because of the increase in burning velocities of methane - hydrogen mixtures.

3. An attempt has been made to correlate the flashback and turbulent burning velocity data. Uncertainties have been emphasised and discussed. The differences in results found are likely to arise due to the following primary causes: the method used to derive flame front position, turbulent flow characteristics, flame regime, unburnt gas temperature. Modifications are needed to the Bunsen type burner to produce flame conditions at flashback closer to those pertaining in swirl burners.

Acknowledgments

A. Bagdanavicius thanks EU for sponsoring his research under the Marie Curie programme INECSE (Integrated Energy Conversion for Sustainable Environment, MEST-CT-2005-021018). N. Shelil wishes to express his thanks to the Egyptian Government for sponsoring his research.

References

[1]di Sarli, V. and di Benedetto, A., "Laminar Burning Velocity of Hydrogen-Methane/Air Premixed Flames," *International Journal of Hydrogen Energy*, Vol. 32, 2007, pp. 637–646.

[2]Chiesa, P., Lozza, G., and Mazzocchi, L., "Using Hydrogen as Gas Turbine Fuel," *Journal of Engineering for Gas Turbines and Power*, Vol. 127, No. 1, 2005, pp. 73–80.

[3]Syred, N., "Generation and Allevation of Combustion Instabilities in Swirling Flow," *Advanced Combustion and Aerothermal Technologies*, edited by N. Syred and A. Khalatov, Springer Netherlands, 2007, pp. 3–20.

[4]Syred, N., "A review of oscillation mechanisms and the role of the Precessing Vortex Core (PVC) in swirl combustion systems," *Progress in Energy and Combustion Science*, Vol. 32, No. 2, 2006, pp. 93–161.

[5]Syred, N. and Beer, J. M., "Combustion in swirling flows: A review," *Combustion and Flame*, Vol. 23, No. 2, 1974.

[6]Gupta, A. K., Lilley, D. G., and Syred, N., *Swirl Flows*, Abacus Press, Tunbridge Wells, 1984.

[7]Huang, Y. and Yang, V., "Bifurcation of flame structure in a lean-premixed swirl-stabilised combustor: transition from stable to unstable flame," *Combustion and Flame*, Vol. 136, No. 3, 2004, pp. 383–389.

[8]Huang, Y. and Yang, V., "Dynamics and stability of lean-premixed swirl-stabilized combustion," *Progress in Energy and Combustion Science*, Vol. 35, 2009, pp. 293–364.

[9]Vanoverberghe, K., *Flow, Turbulence and Combustion of Premixed Switling Jet Flames*, Ph.D. thesis, Katholieke Universiteit Leuven, 2004.

[10]Coghe, A., Solero, G., and Scribano, G., "Recirculation phenomena in a natural gas swirl combustor," *Experimental Thermal and Fluid Science*, Vol. 28, No. 7, 2004, pp. 709–714.

[11]Valera-Medina, A., *Coherent structure and their effects on processes occurring in swirl combustors*, Phd, Cardiff University, 2009.

[12]Valera-Medina, A., Syred, N., and Griffiths, A. J., "Visualisation of isothermal large coherent structures in a swirl burner," *Combustion and Flame*, Vol. 156, No. 9, 2009, pp. 1723–1734.

[13]Kröner, M., Fritz, J., and Sattelmayer, T., "Flashback limits for combustion induced vortex breakdown in a swirl burner," *Journal of Engineering for Gas Turbines and Power*, Vol. 125, 2003, pp. 693–700.

[14]Lieuwen, T., McDonell, V., Petersen, E., and Sanatvicca, D., "Fuel flexibility influences on premixed combustor blowout, flashback, autoignition, and stability," *Journal of Engineering for Gas Turbines and Power*, Vol. 130, 2008.

[15]Hermanns, R. T. E., *Laminar Burning Velocities of Methane-Hydrogen-Air Mixtures*, Ph.D. thesis, Technische Universiteit Eindhoven, 2007.

[16]Ilbas, M., Crayford, A. P., Ylmaz, I., Bowen, P. J., and Syred, N., "Laminar burning velocities of hydrogen-air and hydrogen-methane-air mixtures: An experimental study," *International Journal of Hydrogen Energy*, Vol. 31, 2006, pp. 1768–1779.

[17]Halter, F., Chauveau, C., and Gökalp, I., "Characterization of the effects of hydrogen addition in premixed methane/air flames," *International Journal of Hydrogen Energy*, Vol. 32, 2007, pp. 2585–2592.

[18]Mandilas, C., Ormsby, M. P., Sheppard, C. G. W., and Wooley, R., "Effects of hydrogen addition on laminar and turbulent premixed methane and iso-octane - air flames," *Proceedings of the Combustion Institute*, Vol. 31, 2007, pp. 1443–1450.

[19]Law, C. K. and Kwon, O. C., "Effects of hydrocarbon substitution on atmospheric hydrogen-air flame propagation," *International Journal of Hydrogen Energy*, Vol. 29, 2004, pp. 867–879.

[20]Liu, F. and Gülder, O. L., "Effects of H_2 and H Preferential Diffusion and Unity Lewis Number on Superadiabatic Flame Temperatures in Rich Premixed Methane Flames," *Combustion and Flame*, Vol. 143, 2005, pp. 264–281.

[21]Zhang, Y., Wu, J., and Ishizuka, S., "Hydrogen Addition Effect on Laminar Burning Velocity, Flame Temperature and Flame Stability of a Planar and a Curved CH_4-H_2-air premixed flame," *International Journal of Hydrogen Energy*, Vol. 34, 2009, pp. 519–527.

[22]Shelil, N., Bagdanavicius, A., Griffiths, A. J., Roberts, P. J., and Syred, N., "Flashback analysis of Hydrogen/Methane mixtures for premixed swirl combustion," *16th International IFRF members conference*, 2009.

[23]Bagdanavicius, A., Bowen, P. J., Syred, N., Kay, P., Crayford, A., Sims, G., and Wood, J., "Burning Velocities of Alternative Gaseous Fuels at Elevated Temperature and Pressure," *AIAA Journal*, , No. Accepted 03.11.2009, 2009.

[24]Göttgens, J., Mauss, F., and Peters, N., "Analytic approximation of burning velocities and flame thickness of lean hydrogen, methane, ethylene, ethane, acetylene, and propane flames," *Twenty-Fourth Symposium on Combustion/The Combustion Institute*, 1992, pp. 129–135.

[25]"CHEMKIN-PRO," 2008.

[26]Kee, R., Grcar, J., Smooke, M., and Miller, J., "PREMIX: A Fortran Program for Modeling Steady, Laminar, One-Dimensional Premixed Flames," Tech. rep., Sandia National Laboratories, 1983.

[27]Smith, G. P., Golden, D. M., Frenklach, M., Moriarty, N. W., Eiteneer, B., Goldenberg, M., Bowman, C. T., Hanson, R. K., Song, S., Gardiner, W. C., Lissianski, V. V., and Qin, Z., "GRI-Mech 3.0," .

[28]Serrano, C., Hernandez, J. J., Mandilas, C., Sheppard, C. G. W., and Woolley, R., "Laminar burning behaviour of biomass gasification-derived producer gas," *International Journal of Hydrogen Energy*, Vol. 33, No. 2, 2008, pp. 851–862.

[29]Ströhle, J. and Myhrvold, T., "An evaluation of detailed reaction mechanisms for hydrogen combustion under gas turbine conditions," *International Journal of Hydrogen Energy*, Vol. 32, No. 1, 2007, pp. 125–135.

[30]Aung, K. T., Hassan, M. I., and Faeth, G. M., "Effects of Pressure and Nitrogen Dilution on Flame/Stretch Interactions of Laminar Premixed $H_2/O_2/N_2$ Flames," *Combustion and Flame*, Vol. 112, 1998, pp. 1–15.

[31]O'Conaire, M., Curran, H. J., Simmie, J. M., Pitz, W. J., and Westbrook, C. K., "A comprehensive modeling study of hydrogen oxidation," *International Journal of Chemical Kinetic*, Vol. 36, No. 11, 2004, pp. 603–622.

[32]Lafay, Y., Renou, B., Cabot, G., and Boukhalfa, M., "Experimental and Numerical Investigation of the Effect of H_2 Enrichment on Laminar Methane-Air Flame Thickness," *Combustion and Flame*, Vol. 153, 2008, pp. 540–561.

[33]Li, J., Zhao, Z., Kazakov, A., and Dryer, F. L., "An Updated Comprehensive Kinetic Model of Hydrogen Combustion," *International Journal of Chemical Kinetic*, Vol. 36, No. 10, 2004, pp. 566–575.

[34]"http://maeweb.ucsd.edu/ combustion/cermech/," .

[35]Zimont, V., Polifke, W., Bettelini, M., and Weisenstein, W., "An Efficient Computational Model for Premixed Turbulent Combustion at High Reynolds Numbers Based on a Turbulent Flame Speed Closure," *Journal of Engineering for Gas Turbines and Power*, Vol. 120, 1998, pp. 526–532.

[36]"FLUENT 6.3 User's Guide," 2006.

[37]Shelil, N., Griffiths, A., Bagdanavicius, A., and Syred, N., "Stability limits of premixed H_2/CH_4 flames," *ASME Turbo Expo 2010: Power for Land, Sea, and Air, Glasgow, UK, 14-18 June 2010*, , No. GT2010-23623 (submitted), 2010.

[38]Shelil, N., Griffiths, A. J., and Syred, N., "Numerical Study of Stability Limits of Premixed-Swirl Flame," *45th AIAA/ASME/SAE/ASEE Joint Propulsion Conference*, 2009.

[39]Griebel, P., Boschek, E., and Jansohn, P., "Lean blowout limits and NO_x emissions of turbulent, lean, premixed, hydrogen-enriched methane/air flames at high pressure," *Journal of Engineering for Gas Turbines and Power*, Vol. 129, 2007, pp. 404–410.

[40]Bagdanavicius, A., Shelil, N., Bowen, P. J., Syred, N., and Crayford, A. P., "Investigations of gaseous alternative fuels at atmospheric and elevated temperature and pressure conditions," *ASME Turbo Expo 2010: Power for Land, Sea, and Air, Glasgow, UK, 14-18 June 2010*, , No. GT2010-23270 (submitted), 2010.

[41]Bilger, R. W., Pope, S. B., Bray, K. N. C., and Driscoll, J. F., "Paradigms in turbulent combustion research," *Proceedings of the Combustion Institute*, Vol. 30, Elsevier Inc., 2005, pp. 21–42.

[42]Driscoll, J. F., "Turbulent premixed combustion: Flamelet structure and its effect on turbulent burning velocities," *Progress in Energy and Combustion Science*, Vol. 34, 2008, pp. 91–134.