Copyright © 1998, American Institute of Aeronautics and Astronautics, Inc.

LASER-BASED DIAGNOSTICS FOR CHARACTERIZING PRACTICAL COMBUSTOR HARDWARE

James R. Gord,* Dale T. Shouse,† and W. M. Roquemore‡
Propulsion Sciences and Advanced Concepts Division
Air Force Research Laboratory
Wright-Patterson Air Force Base OH

Abstract

The Propulsion Directorate of the Air Force Research Laboratory exists to provide propulsion and power solutions essential to achieving and maintaining Global Engagement—the Air Force Strategic Vision for the 21st Century. Factors driving the Directorate's mission include the need to design, develop, test, and field high-performance, low-emissions propulsion systems, for both air and space, that are reliable, affordable, maintainable, and supportable. Many of the goals defining these efforts are communicated in the Integrated High-Performance Turbine Engine Technology (IHPTET) Program and the Integrated High-Payoff Rocket Propulsion Technology (IHPRPT) Program. The Combustion Branch of the Directorate's Propulsion Sciences and Advanced Concepts Division supports such efforts, particularly as they relate to gas turbine combustion, through the activity of a multidisciplinary team of scientists and engineers representing government, industry, and academia. This paper highlights recent Combustion-Branch efforts to develop advanced laser-based diagnostic techniques and apply these to fundamental studies in the laboratory. Case studies showcase the transition of diagnostic techniques from the laboratory to realistic engine-test facilities in which practical combustor hardware is characterized.

Introduction

Global Engagement—the Air Force Strategic Vision for the 21st Century—demands enabling propulsion and power solutions such as those currently under development in the Propulsion Directorate of the Air Force Research Laboratory. This strategic vision requires high-performance systems designed to ensure continued air and space superiority; however, signature-reduction concerns and sensitivity to global environmental issues demand low-emissions performance of these propulsion systems as well. Often the very conditions that yield high performance (such as high-heat-release combustion) also contribute to the formation of undesirable engine emissions (such as nitric oxide, NO, and associated oxides of nitrogen, NO_x). Such challenges define the mission of the Propulsion Directorate.

High-performance, affordability, and reliability goals driving development of air-breathing gas turbine engines are expressed in the Integrated High-Performance Turbine Engine Technology (IHPTET) Program. Established in 1988, this program teams the Air Force, Army, Navy, DARPA, NASA, and industry through cost-shared efforts designed to double propulsion capability by around the turn of the century. The three-phase IHPTET plan exploits advanced materials development, innovative structural designs, improved aerothermodynamics, and advanced computational methods to achieve well-defined performance and cost goals. Because the roots of nearly all commercial turbine engines can be traced to a Department of Defense weapon-system-development effort, IHPTET technology is inherently dual-use as well.

Specific IHPTET activity is underway to address engine components including turbomachinery (fans, compressors, and turbines), combustors, mechanical systems, exhaust systems, and controls. Supporting efforts include the development of diagnostic instrumentation, improved manufacturing techniques, innovative analysis and design methodologies, and specialized test facilities.

Similar programs describe other aspects of the Propulsion-Directorate mission. For example, the Integrated High-Payoff Rocket Propulsion Technology (IHPRPT) Program mirrors IHPTET in many ways and promises to double U.S. rocket propulsion capability. The JP-8+100 Fuel Program exists to provide enabling thermal-management solutions for current and future

*Senior Research Chemist, Member AIAA
†Mechanical Engineer, Member AIAA
‡Principal Research Physicist, Associate Fellow AIAA

This paper is declared a work of the U.S. Government and is not subject to copyright protection in the United States.

Copyright © 1998, American Institute of Aeronautics and Astronautics, Inc.

aircraft through the development of advanced thermally stable fuels and fuel additives.

In addition to the high-performance drivers represented by these programs, low-emissions goals impact the continuing development of advanced propulsion and power systems. The commercial aviation industry is subject to restrictions on deleterious engine emission such as NO_x, carbon monoxide (CO), unburned hydrocarbons (UHC's), volatile organic compounds (VOC's), reactive organic gases (ROG's), and particulate matter (PM). These regulations are imposed at the state and federal level through the Environmental Protection Agency (EPA) and internationally through the International Civil Aviation Organization (ICAO), for example. Maintaining the dual-use characteristics of military propulsion solutions demands Air Force sensitivity to these low-emissions regulations.

While military aircraft and military bases are typically exempt from such regulations, EPA rule changes recently requested by the State of California suggest reconsideration of the exempt status of military aircraft. Furthermore, there exists a long-standing Air Force policy (Attachment 3 to Air Force Regulation 19-1) that states the Air Force will make a good-faith effort to comply with EPA aircraft-emission regulations while maintaining the high performance needed to ensure flight safety and combat superiority. Air Force signature-reduction goals associated with low-observable-technology programs must be considered as well during development of low-emissions gas turbine engines.

All of these factors make up the framework in which the Combustion Branch of the Directorate's Propulsion Sciences and Advanced Concepts Division conducts its day-to-day activity. High-performance, low-emissions gas turbine combustion is pursued through efforts that include laser-based diagnostics development and application, simulation and modeling, fundamental studies of aviation fuel and its combustion, and associated engineering applications. Working hand-in-hand with other Propulsion-Directorate elements, particularly the Components Branch of the Turbine Engine Division, Combustion-Branch scientists and engineers seek to apply lessons learned during fundamental studies to the design, development, and testing of advanced combustor concepts consistent with the IHPTET vision. Advanced propulsion concepts extending beyond the IHPTET performance envelope are explored as well.

The Combustion-Branch team includes Air-Force scientists and engineers (both civil service and military personnel), on- and off-site contractors, engine manufacturers and subsystem/component suppliers, and academicians who routinely participate in Branch activity through sponsorship by the Air Force Office of Scientific Research (AFOSR). Small businesses responding to exploratory development needs through the Small Business Innovation Research (SBIR) Program also represent a vital component of this team.

Development and application of laser-based diagnostic techniques are integrated throughout Combustion-Branch programs. These techniques represent powerful tools for non-invasive flowfield visualization and quantification of fluid parameters and key species concentrations. At a fundamental level, diagnostics provide data essential to achieving a detailed understanding of the chemistry and physics of combusting flowfields. In addition, these data are essential for validating combustion models and combustor-design codes that promise to usher in a new era in propulsion-system development. At a more applied level, hardened diagnostics provide the propulsion engineer with performance data critical to the systems-engineering process. Diagnostics also promise to play an important role in fielded propulsion systems as elements in control and optimization schemes.

These characteristics of laser-based diagnostic techniques suggest a three-phase evolutionary process for their development and application. In the initial phase, emphasis is placed on the diagnostic technique itself—on the chemistry and physics that define the measurement and the hardware (sources, optics, detectors, etc.) and software necessary to accomplish that measurement. During this phase of the process, a research-grade instrument is typically employed to study a well-characterized flowfield in a laboratory environment. While this phase of the diagnostics-development process is certainly essential and exciting, the ultimate utility of a diagnostic technique is significantly limited if it is never applied beyond the laboratory phase.

During the second phase of the process, a hardened version of the research-grade instrument is applied to achieving measurements in an engineering facility. The emphasis in this phase shifts from the diagnostic technique to the engineering application, such as gas turbine engine development. This transition from the laboratory to the facility is the subject of this session and this paper. During the final phase of the evolutionary process, a miniaturized and robust diagnostic device might be incorporated into the final product, such as an actual gas turbine engine, for on-board sensing and control.

The transition from laboratory to facility is fraught with significant challenges that must addressed. During the laboratory phase of diagnostics development, conditions are typically ideal and well-controlled. They might involve vibrationally isolated laser tables, humidity- and temperature-controlled environments, and sufficient space to accommodate sources, optics,

Copyright © 1998, American Institute of Aeronautics and Astronautics, Inc.

mounts, and detectors required to achieve the desired measurement. Test articles often feature ample optical access and support clean-burning, laminar flames operating under atmospheric or sub-atmospheric conditions. In contrast, facilities applications involve conditions characteristic of actual gas turbine combustor hardware. Challenges include extreme environmental conditions (heat, vibration, acoustics, etc.), fully developed turbulence, high pressure, collisional quenching and energy redistribution, optical thickness, beam steering, high background luminosity, soot formation, limited optical access, tight geometric constraints, limited operational space, and scattering and spectral interferences. Successful transition from the laboratory to the facility requires thoughtful attention to these issues.

This paper continues with a brief description of ongoing Combustion-Branch efforts to develop novel diagnostic techniques and supporting hardware. Facilities applications are highlighted through a collection of case studies. Atmospheric-pressure and high-pressure applications at Wright-Patterson Air Force Base are presented with emphasis on the specialized facilities constructed to explore advanced combustor concepts in cooperation with the Turbine Engine Division's Components Branch. Facilities construction and diagnostics applications underway through Combustion-Branch SBIR programs with Physical Sciences, Inc., and MetroLaser, Inc., complete the paper.

Advanced Diagnostics Development

Developing advanced laser-based diagnostics remains a mainstay of Combustion-Branch programs. Current in-house and on-site-contract efforts have been focused on exploiting the potential of high-repetition-rate, modelocked laser sources for combustion diagnostics applications. Continued development of particle-image velocimetry (PIV) is underway as well. In addition, SBIR programs are in place to explore new diagnostics directions. Highlights of each of these development efforts are briefly presented.

With the advent of modelocked titanium:sapphire lasers and associated regenerative amplifiers and optical parametric devices, reliable sources of picosecond and femtosecond laser pulses are now available. Commercial off-the-shelf hardware can be configured to provide relatively low-energy pulses (tens of nanojoules per pulse) at repetition rates approaching 100 MHz or high-energy pulses with terawatts of peak power at lower repetition rates (≤10 Hz).

High-repetition-rate, picosecond sources are currently being applied to fundamental studies in the Combustion Branch. These sources provide sufficient data-acquisition bandwidth to resolve even the fastest turbulence timescales and to capture transient events of interest such as detonation, ignition, and extinction. Furthermore, pump-probe absorption measurements achieved with these lasers can be utilized to quantify key nonfluorescent combustion species. Because measurements are achieved on a picosecond timescale, sensitivity to collisional-quenching and energy-redistribution effects can be mitigated. Imaging applications are also being explored.[1]

Laboratory advances in particle-image velocimetry include the development of digital, two-color techniques designed to exploit the data-throughput and processing advantages afforded by state-of-the-art digital color cameras.[2] Three-dimensional velocity-field mapping through holographic PIV is also currently underway.

Small businesses operating under contract through the SBIR program have been exploring other diagnostics innovations. Southwest Sciences, Inc., is involved in the effort to develop techniques based on modelocked laser technology. Novel sources in the mid-infrared and far-infrared are under development by Aculight, Inc., and Picometrix, Inc., respectively. Innovative Scientific Solutions, Inc., is constructing a phase-sensitive demodulating camera in conjunction with the Colorado School of Mines for advanced imaging applications. Los Gatos Research is investigating far-infrared (terahertz) imaging applications. Diagnostics specifically designed for condensed-phase fuels applications are under development as well. These programs represent diagnostic techniques "in the pipeline" for future application in the laboratory and transition to the facility.

Transitioning Diagnostics to the Test Facility

The preceding material suggests the kind of advanced-diagnostics-development efforts underway in the Combustion Branch. The examples that follow document the transition of diagnostics capability from the laboratory to the engine-test facility.

Pratt & Whitney Task 200 Combustor

As part of the Air Force Combustor Design Model Evaluation (CDME) program, Combustion-Branch scientists and engineers recently completed a series of studies in conjunction with Pratt & Whitney to evaluate flame stability and lean blowout in a generic gas turbine combustor termed the Task 200.[3] The Task 200 was designed to simulate the flowfield and lean-blowout (LBO) characteristics of an actual aircraft gas turbine combustor while providing sufficient optical access and variability of geometry and flow distribution to permit

Copyright © 1998, American Institute of Aeronautics and Astronautics, Inc.

detailed parametric studies for evaluation and calibration of LBO models.

The Task 200 includes a planar array of four injectors configured to represent a simplified-geometry version of an actual Pratt & Whitney annular combustor. The airblast-atomizing fuel injectors employed are actual engine hardware, and the major combustor dimensions (dome height, length, and injector spacing) are based on those associated with the engine in which those injectors operate. The combustor liners and cooling-air scheme were carefully configured to reproduce realistic engine conditions. Pratt & Whitney design practice was incorporated throughout the aerothermodynamic design of the test section. Optical access is provided through fused-quartz side walls and via the base of the rig through a fused-quartz liner. A photograph of the Task 200 combustor is depicted in Fig. 1, and a schematic diagram is provided in Fig. 2.

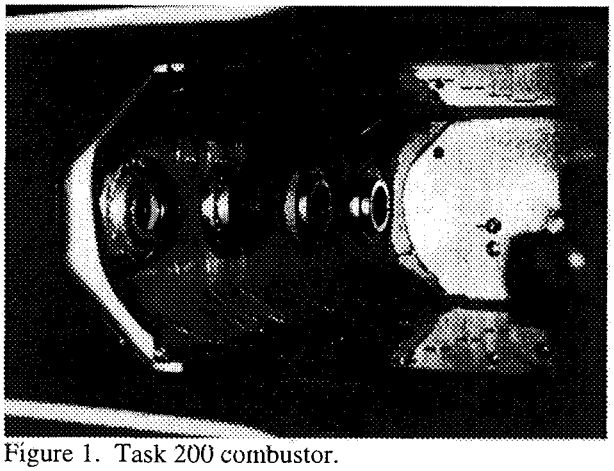

Figure 1. Task 200 combustor.

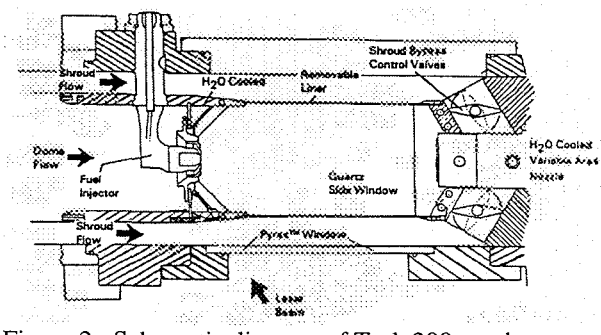

Figure 2. Schematic diagram of Task 200 combustor.

To accomplish LBO studies, the Task 200 combustor was coupled to an air facility designed to provide up to 30 lbm/s of air at ambient temperature and up to 23 lbm/s of nonvitiated air at temperatures to 1200°F. Air pressures to 750 psia are achievable in this facility; however, the majority of the LBO study was conducted at atmospheric pressure.

LBO studies with gaseous fuels were accomplished with propane (available at 0.5 lbm/min at 100 psig) and methane (available at 0.4 lbm/min at 150 psig), while liquid-fuel studies were accomplished with ethanol (available at 15 lbm/hr at 200 psig). Bottled nitrogen (available at 20 lbm/min at 500 psig) was thoroughly mixed with incoming air well upstream of the test section during studies to simulate the effects of reduced pressure on LBO characteristics.

Point measurements of velocity and temperature were accomplished using a hardened laser-Doppler velocimetry (LDV)/coherent anti-Stokes Raman spectroscopy (CARS) system mounted around the test section. The entire laser table supporting the hardened LDV/CARS system was attached to a multi-axis translation stage permitting spatially resolved measurements in the Task 200 combustor in all three spatial dimensions. Turbulence data obtained via LDV and probability distribution functions (PDFs) for temperature obtained via CARS are depicted in Fig. 3.

LBO studies conducted with the Task 200 combustor and these hardened diagnostics over a wide range of operating conditions reveal the complexity of the LBO process. Based on these studies, it was suggested that the classic representation of a gas turbine combustor as a single, well-stirred reactor followed by a plug-flow reactor is insufficient for predicting LBO behavior.

General Electric CFM56 Fuel Injector

Fuel injector/air swirler assemblies (i.e., "swirl cups") are designed to provide good fuel-lean stability during low-power operation and thorough fuel-air mixing, efficient combustion, and low pollutant emissions during high-power operation.[4] To explore swirl cup characteristics and expand current understanding of important design parameters, Combustion-Branch researchers and on-site contractors recently studied the structure of an atmospheric-pressure spray flame stabilized on a production-engine combustor swirl cup. In actual practice, multiple swirl cups are employed at substantially higher operating temperatures and pressures; however, the current study retains many of the characteristic features that define swirl-cup operation.

In an effort to maintain this connection to real-world operation, the study was accomplished using a single swirl cup from a General Electric CFM56 production engine. The swirl cup was mounted in a research combustor and supplied with Jet-A fuel at a mass-flow rate of 1.30 g/s and air at a mass-flow rate of 29.7 g/s. A simplified schematic of the swirl cup and a photograph of the Jet-A spray flame are depicted in Fig. 4.

Copyright © 1998, American Institute of Aeronautics and Astronautics, Inc.

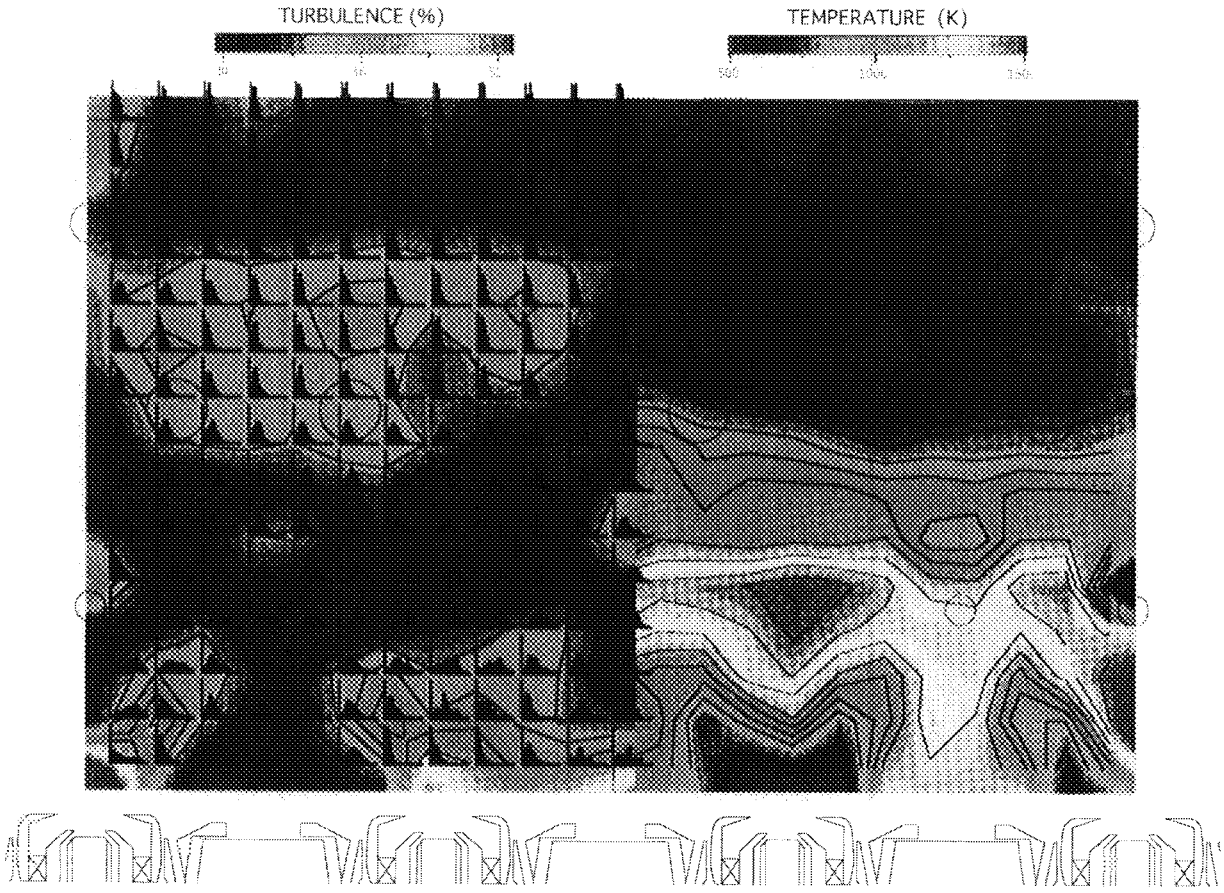

Figure 3. Temperature PDFs and turbulence data obtained through CARS/LDV studies of the Task 200 combustor.

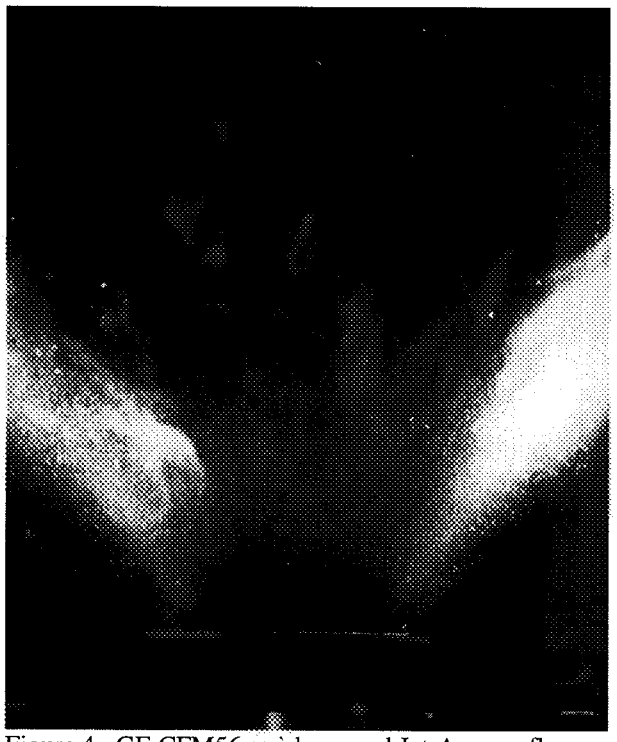

Figure 4. GE CFM56 swirl cup and Jet-A spray flame.

The Jet-A spray flame was characterized using phase-Doppler anenometry (PDA) and CARS. A Dantec Measurement Technology three-component PDA provided droplet-size distributions and velocity information to complement CARS temperature measurements achieved with a broadband system configured in a folded-BOXCARS arrangement.

Recently, this effort has been extended to study the impact of an advanced combustor geometry on the operation of the CFM56 single-cup research combustor. This modified configuration is depicted in Fig. 5. Details of this particular study can not be released due to its proprietary nature.

Room 151: Atmospheric-Pressure Facility

The combustion research facility housed in Building 490 Room 151 at Wright-Patterson Air Force Base (Area B) was designed for the experimental exploration of advanced combustor concepts under atmospheric-pressure conditions with elevated inlet-air temperatures Several different combustor test sections can be installed in the facility, and each provides generous optical access to the combustion flowfield. Test sections are designed to contain single-cup or dual-cup

Copyright © 1998, American Institute of Aeronautics and Astronautics, Inc.

combustor-dome configurations. Three separate metered, controlled, and heated air lines provide combustion air to the test article. These three lines supply dome or main air (20 lbm/min at 700°F), primary-zone air (7 lbm/min at 700°F), and secondary-zone or cooling air (7 lbm/min at 700°F). A photograph that includes the test section is depicted in Fig 6.

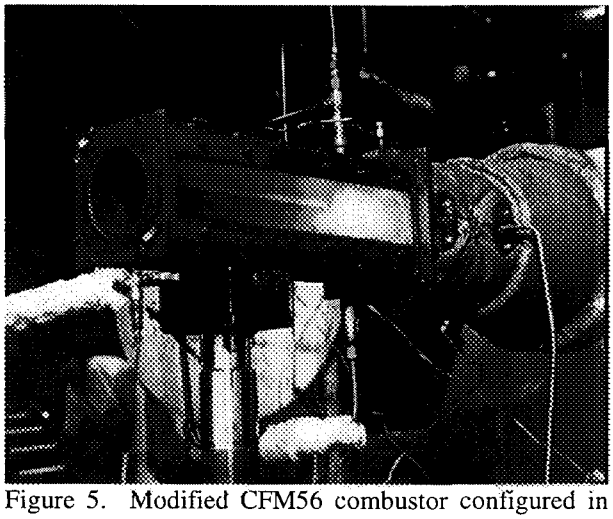

Figure 5. Modified CFM56 combustor configured in and advanced geometry.

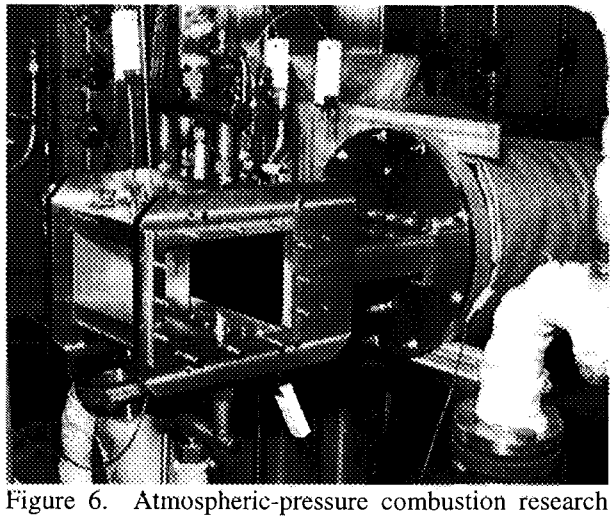

Figure 6. Atmospheric-pressure combustion research facility.

Exhaust System: The facility is connected to an external exhaust-duct system via a rectangular duct located at the exit of the combustor. This duct, which routes exhaust gases vertically through the test-cell ceiling, provides optical access to the combustor exit. Two video cameras are available to document combustor operation. One provides images from the side of the test section, while the other provides images at the rear of the test section through the exhaust duct.

Fuel System: The facility has two identical fuel systems that supply liquid fuels (e.g., JP-8, ethanol) at rates of 0.6 gpm and pressures to 300 psig. The two systems are configured to accommodate fuel staging for staged combustor systems operating in the facility. Fuel flows are metered with turbine flowmeters and controlled via remotely located valves. A gaseous fuel system also exists to deliver propane or methane to the test article.

Instrumentation: The facility utilizes PC-based LabView software for data acquisition. The system is configured with 64 K-type thermocouple channels for the facility and test article, as well as Type B channels for water-cooled thermocouple rakes. Incorporated are 32 pressure channels connected to a variety of psia, psid, and psig transducers. A Kulite dynamic-pressure-transducer system is employed to investigate combustor instabilities through data collected on-line with a 16-channel high-density multiplex PCM data recorder and analyzed post test. Gas-emission samples are analyzed on-line through the LabView software using Horiba instruments configured to measure NO_x, CO, CO_2, UHC, and O_2. Gas samples are analyzed in accordance with Aerospace Recommended Practices (ARP).

Controls: Facilities controls include both process and supervisory activities. The process controls utilize PID controllers with feedback provided by standard transmitters and computer control loops. The supervisory controls utilize a Modicon Programmable Logic Control (PLC) system. The PLC uses preprogrammed logic to ensure that remotely actuated valves and controls throughout the facility are never improperly sequenced.

Room 20: High-Pressure Facility

The high-pressure combustion research facility housed in Building 18 Room 20 at Wright-Patterson Air Force Base (Area B) was designed for the experimental exploration of advanced combustor concepts under conditions simulating actual gas turbine engine operation. The facility includes two flowpaths as shown in Fig 7. One provides high-pressure combustion testing at pressures to 45 atm (660 psig), while the other provides testing to 20 atm (300 psig). The 45-atm system houses a single-cup combustor but currently provides no optical access to the combustion flowfield. The 20-atm system, which houses a single- or dual-dome combustor sector, incorporates a rectangular test section with generous optical access provided via windows at four sides. A photograph that includes this test section is depicted in Fig. 8. With 2.5-inch-thick optical-grade fused-silica windows installed the maximum test-section operating pressure is derated

Copyright © 1998, American Institute of Aeronautics and Astronautics, Inc.

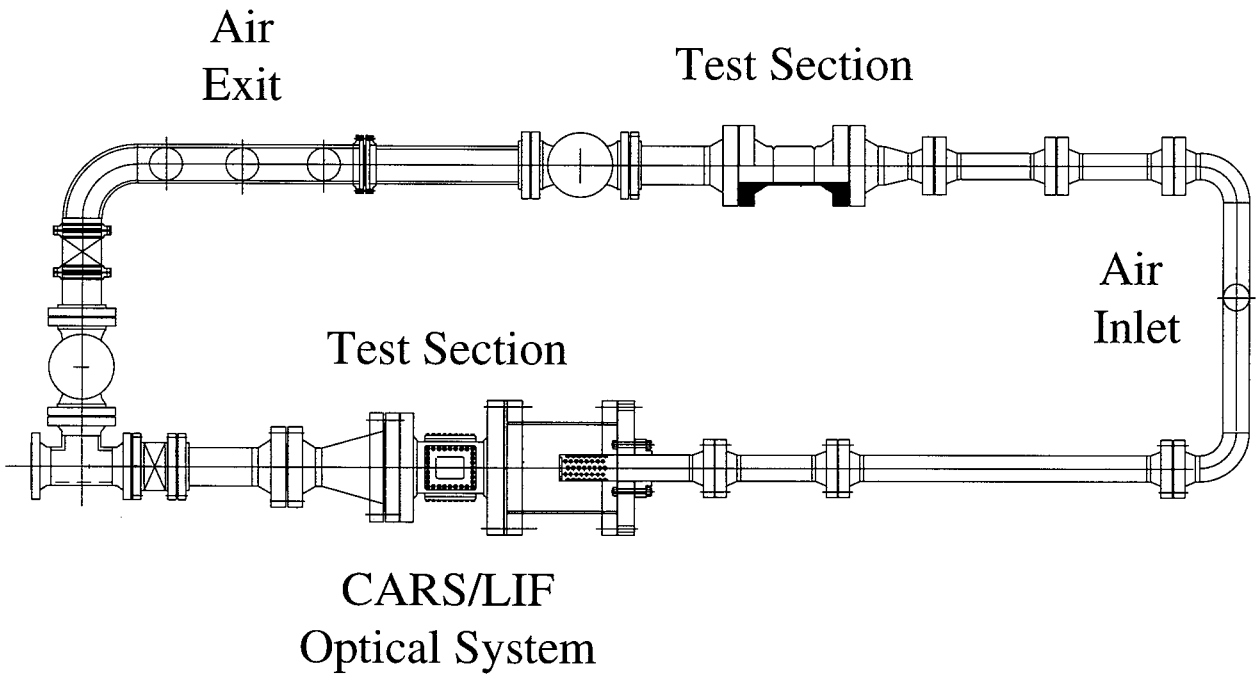

Figure 7. Schematic diagram of high-pressure combustion research facility.

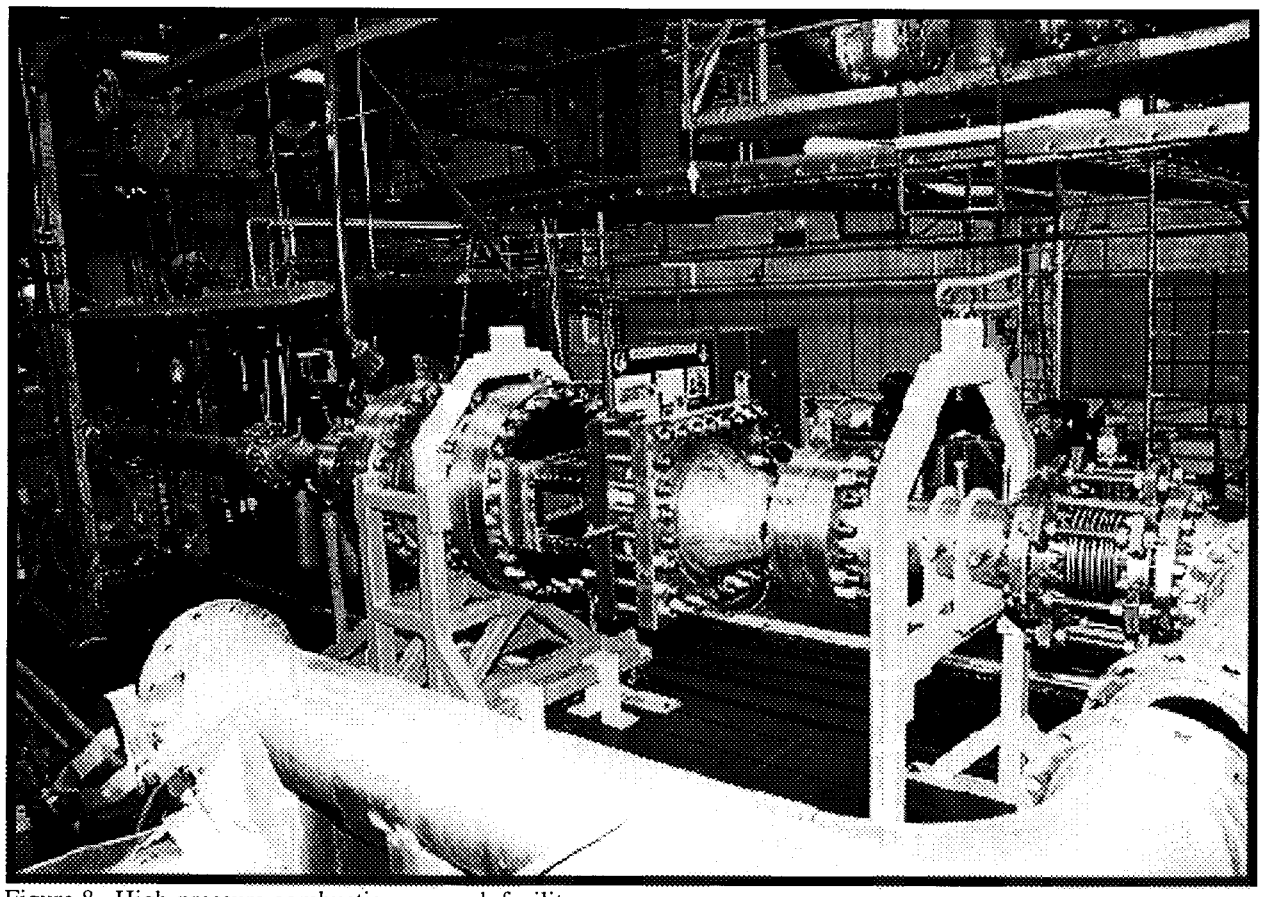

Figure 8. High-pressure combustion research facility.

Copyright © 1998, American Institute of Aeronautics and Astronautics, Inc.

to 15 atm. With stainless-steel blanks installed, the full 20-atm test-section capability is achievable.

The facility was designed to accommodate an optical diagnostics system that encompasses the test section. Diagnostics include CARS for temperature measurements and planar laser-induced fluorescence (PLIF) for flow visualization and quantification of key combustion species. Encoded translations stages controlling the transmitting and receiving optics permit full three-dimensional spatial resolution of the test-section flowfield.

Air-Supply System: Two Ingersoll-Rand air compressors housed in the Test Air Facility located in the lower level of the Building-18 complex furnish combustion air to the Room-20 facility. Air mass-flow rates to greater than 34 lbm/s at pressures to 750 psig are available. Air is routed through a natural-gas-fired, non-vitiated heater that can deliver 34-lbm/s airflows to the facility at temperatures to 1100°F. Flows to the single-cup combustor system are maintained at 13 lbm/s and 1100°F, while flows to the sector-combustor system are maintained at 20 lbm/s and 1100°F. In both cases, combustor airflows are measured via a flow venturi located in the inlet piping system.

Exhaust System: The facility is connected to four Ingersoll-Rand exhausters that can achieve sub-atmospheric pressures in the exhaust-piping header. Exhaust gases are removed from the facility at a sufficiently high rate to provide altitude-testing capability. The facility can be configured to operate at combustor-test-section pressures as low as 0.25 atm, simulating altitudes beyond 30,000 ft.

Cooling-Water System: The facility requires large amounts of cooling water to quench hot exhaust gases and actively cool thermocouples and emission probes located at the exit of the combustor. Water is delivered to the combustor test section at flow rates in excess of 100 gpm and delivery pressures to 900 psig. Prior to pressurization and delivery, the water is conditioned with a reverse osmosis (RO) system. Large storage tanks hold over 12,000 gallons of pre-treated water for each test. With respect to the RO water system, the facility operates in a blow-down mode with make-up RO water supplied at a rate of 25 GPM during testing.

Fuel System: The facility has two identical fuel systems that supply liquid fuel to each test section at rates of 6 gpm and pressures to 1000 psig. The two systems are configured to accommodate fuel staging for staged combustor systems operating in the facility. Fuel flows are metered with turbine flowmeters.

Instrumentation: The facility utilizes a Sun Workstation coupled to a Camac system for data acquisition. The system is configured with 108 K-type thermocouple channels for the facility and test article, as well as Type B channels for water-cooled thermocouple rakes. Incorporated are 48 pressure channels connected to a variety of psia, psid, and psig transducers. A Kulite dynamic-pressure-transducer system is employed to investigate combustor instabilities through data collected on-line with a 16-channel high-density multiplex PCM data recorder and analyzed post test. Gas-emission samples are analyzed on-line through the Sun Workstation using Beckman instruments configured to measure NO_x, CO, CO_2, UHC, and O_2. Gas samples are analyzed in accordance with Aerospace Recommended Practices (ARP).

Controls: Facilities controls include both process and supervisory activities. The process controls utilize Fisher Rosemount PID controllers with feedback provided by standard transmitters and computer control loops. The supervisory controls utilize a Modicon Programmable Logic Control (PLC) system. The PLC uses preprogrammed logic to ensure that remotely actuated valves and controls throughout the facility are never improperly sequenced. In addition, the PLC system can act when notified of an emergency situation by the Sun Workstation to shut the facility down safely and avoid catastrophic failures which might otherwise result during high-pressure combustion testing.

Activity at Physical Sciences, Inc.

Over the course of the past several years, researchers at Physical Sciences, Inc., (PSI) have been working with the Combustion Branch to explore diagnostics applications under actual engine operating conditions. Through a series of SBIR programs (both Phase I and Phase II), the PSI research team has evaluated the impact of high pressure, optical thickness, scattering from liquid fuel sprays, and broadband spectral interferences associated with polyaromatic hydrocarbons (PAH) on PLIF measurements of key combustion species and laser-induced incandescence (LII) measurements of soot volume fraction.[5,6]

During initial studies, a PLIF/LII system based on an excimer-pumped dye laser was assembled and applied to measurements of OH, NO, O_2, hydrocarbons, and soot volume fraction in the test section depicted in Fig. 9. This test section was configured to support model spray flames fueled with heptane, methanol, and ethanol over the range of pressures from 0.1 to 1.0 MPa. Detailed modeling of the PLIF-signal pressure dependence produced quantitative measurements over this pressure range. Optical thickness and broadband PAH fluorescence posed the most significant challenges.

Reasoning that PAH fluorescence might be largely eliminated in a more realistic combustor geometry designed to provide preheated inlet air, increased airflows, and enhanced mixing, the PSI team constructed the facility pictured schematically in Fig. 10. The spray-flame test section of Fig. 9 appears with

Copyright © 1998, American Institute of Aeronautics and Astronautics, Inc.

this second-generation system. In fact, that test section has since been replaced with a high-pressure section designed for operation to 50 atm that accommodates actual engine hardware in the form of a General Electric CFM56 swirl cup.

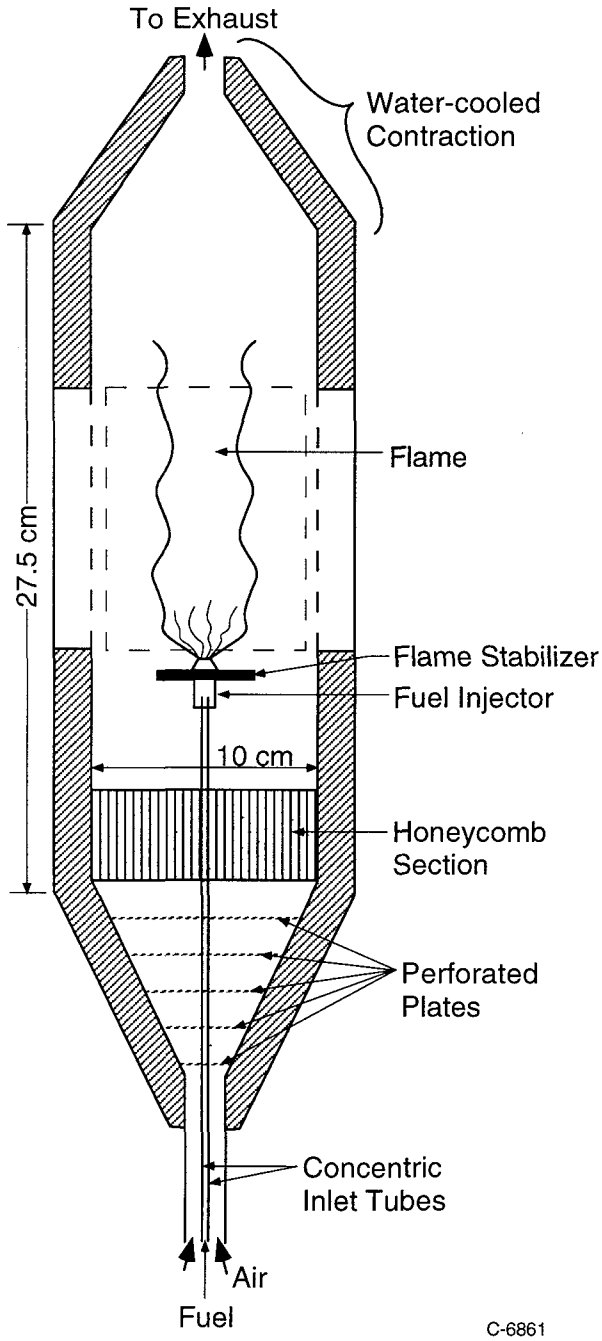

Figure 9. PSI high-pressure spray-flame combustor test section.

The facility described by Fig. 10 is designed to deliver a maximum airflow rate of 1 kg/s at 530 K and 50 atm. The system operates in a blow-down mode, providing ten-minute run times at CFM56 design specifications with currently available storage capacity. A separate low-pressure air-supply system is available for facility preheating and purging. A fuel system designed to supply the fuel injector with 0.55 gpm at 1500 psi completes the facility.

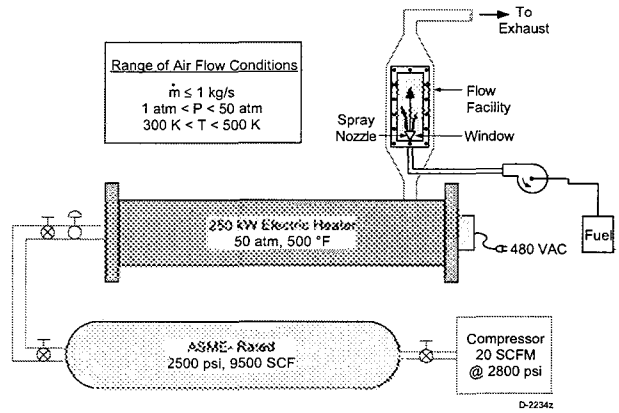

Figure 10. PSI gas turbine combustor simulator facility.

A PLIF system based on a Nd:YAG-pumped dye laser and an intensified charge-coupled device (CCD) camera was recently constructed at PSI. This system will be used in conjunction with the high-pressure, heated air-supply system and the optically accessible combustor to study OH, NO, PAH, fuel vapor, O_2, and soot volume fraction in combusting flowfields generated with the CFM56 fuel injector. A large format (1024x256 pixels) ICCD camera with a multi-viewer imaging system was selected for this diagnostics application. With this camera, images of target-species fluorescence and interfering fluorescence can be simultaneously acquired, reducing interferences associated with single-shot PLIF imaging in these high-pressure spray flames. Now that facility construction and PLIF-system assembly have been completed, combustion testing will soon commence.

Activity at MetroLaser, Inc.

Through a recently completed Phase I SBIR effort and a current Phase II SBIR, researchers at MetroLaser, Inc., and North Carolina State University are pursuing measurements of temperature, velocity, and pressure/density in high-pressure, sooting flames via nonresonant transient-grating spectroscopy (TGS).[7,8] The technique involves coherent scattering of a continuous-wave probe beam from a grating created in the flowfield under study. Two pulsed pump beams are crossed in the flowfield to generate an intensity grating which is coupled to the flow through thermalization and electrostriction. The resulting spatial modulation of the

Copyright © 1998, American Institute of Aeronautics and Astronautics, Inc.

local index of refraction is responsible for scattering the probe beam. The optical geometry employed is depicted schematically in Fig. 11.

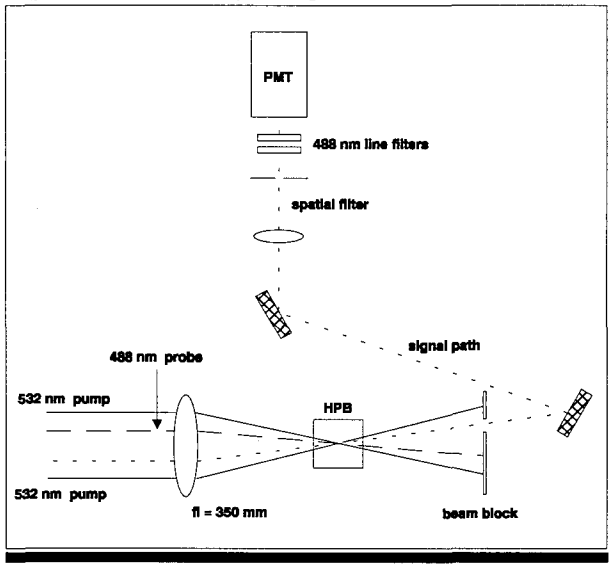

Figure 11. Schematic of the TGS optical geometry.

Local temperature information can be extracted from speed-of-sound measurements in the interaction volume accomplished by monitoring the modulation frequency of the time-resolved signal produced by the scattered probe beam. A typical time-resolved signal and the associated fit to obtain temperature/speed-of-sound information are provided in Fig. 12.

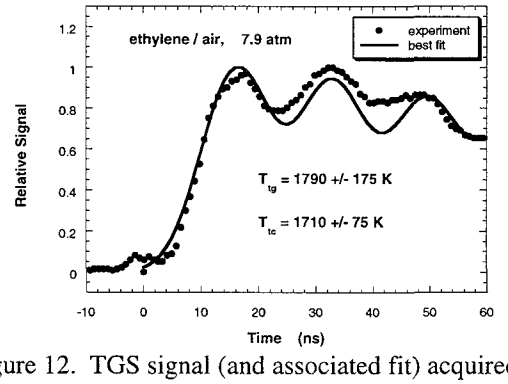

Figure 12. TGS signal (and associated fit) acquired in the burnt gases of a rich ethylene/air flame.

By introducing a reference beam along the signal path, heterodyne detection can be accomplished. Gas velocities can be determined through analysis of heterodyne-signal power spectra by measuring the frequency shift of the heterodyne feature. Finally, halfwidths of Rayleigh and Brillouin features in the power spectrum provide pressure/density information. A simulated heterodyne-mode power spectrum is depicted in Fig. 13.

This nonresonant TGS technique offers a number of key advantages for measurements under engine-

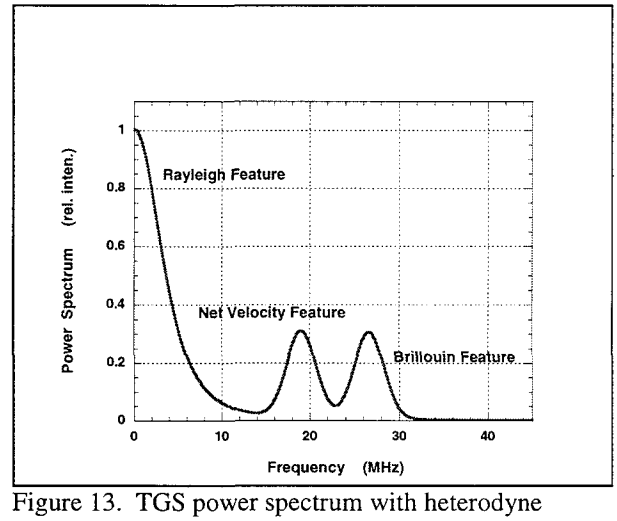

Figure 13. TGS power spectrum with heterodyne detection.

operating conditions. The signal amplitude grows quadratically with pressure, and the technique does not rely on the detection of electronically excited molecules; therefore, TGS is enhanced with increasing pressure and largely unaffected by collisional quenching. Soot also enhances the TGS signal by providing a means for coupling of the pump-induced intensity grating to the surrounding medium via thermalization. The spatially coherent signal beam produced during TGS measurements is ideal for working with test sections that offer limited optical access. In addition, this signal beam is readily separated from a highly luminous background through spatial and spectral filtering. Because TGS measurements are accomplished in the frequency domain, the technique is relatively insensitive to signal-amplitude fluctuations induced through the lasers employed or through beam steering arising in high-pressure, optically thick, turbulent environments.

Summary

This paper was designed to establish the motivation for applying laser-based diagnostic techniques to the continuing improvement of high-performance, low-emissions gas turbine combustors. Ideally, diagnostics should be involved throughout the process of designing, developing, testing, and fielding practical combustor hardware. In the laboratory phase of this process, diagnostic techniques contribute to understanding of the fundamental chemistry and physics at work in the gas turbine combustor. These tools also provide data essential to the development and validation of combustion models and combustor-design codes. In the facility phase, hardened diagnostic techniques provide

Copyright © 1998, American Institute of Aeronautics and Astronautics, Inc.

critical feedback to the engineer seeking to evaluate and improve the performance of actual engine hardware. Finally, miniaturized devices based on these diagnostic techniques can be incorporated into the actual fielded engine for on-board sensing and control. Case studies presented in this paper document continuing development of advanced laser-based diagnostic techniques and transition of such techniques to the facility for practical application.

Acknowledgments

The authors gratefully acknowledge the continuing efforts of all those associated with the Combustion-Branch research and development team, particularly the on-site work force, which includes Air Force personnel and the talented employees of Innovative Scientific Solutions, Inc., (Dr. Larry Goss, Principal Investigator) and the University of Dayton Research Institute (Dr. Dilip Ballal, Principal Investigator). Mr. Jeff Stutrud, Mr. Chuck Frayne, and Dr. Robert Hancock of the Combustion Branch have contributed immeasurably to the on-site efforts documented in this paper. Drs. Mark Allen and Mike Miller (Physical Sciences, Inc.) and Dr. Mike Brown (MetroLaser, Inc.), who continue to support the Air Force through first-class SBIR efforts, provided the authors with a number of figures that appear with their permission. The authors also thank Dr. Fumi Takahashi who provided figures for this paper and the associated presentation.

References

1. M. A. Linne, D. C. Morse, J. L. Skilowitz, G. J. Fiechtner, and J. R. Gord, "Two-Dimensional Pump-Probe Imaging in Reacting Flows," Opt. Lett **20**, 2414 (1995).

2. S. Gogineni, L. Goss, D. Pestian, and R. Rivir, "Two-Color Digital PIV Employing a Single CCD Camera," Exp. Fluids, in press.

3. G. J. Sturgess and D. Shouse, "Lean Blowout Research in a Generic Gas Turbine Combustor With High Optical Access," Trans. ASME **119**, 108 (1997).

4. F. Takahashi, W. J. Schmoll, G. L. Switzer, and D. T. Shouse, "Structure of a Spray Flame Stabilized on a Production Engine Combustor Swirl Cup," Twenty-Fifth Symposium (International) on Combustion, Pittsburgh PA, 183 (1994).

5. M. G. Allen, K. R. McManus, D. M. Sonnefroh, and P. H. Paul, "Planar Laser-Induced-Fluorescence Imaging Measurements of OH and Hydrocarbon Fuel Fragments in High-Pressure Spray-Flame Combustion," Appl. Opt. **34**, 6287 (1995).

6. K. R. McManus, M. G. Allen, and W. T. Rawlins, "Quantitative Detection and Imaging of Soot Particles by Laser Induced Incandescence," AIAA Paper No. 97-0117 (Reno, January 1997).

7. M. S. Brown and W. L. Roberts, "Diagnostics in Reacting Flows Using Transient Grating Spectroscopy," AIAA Paper No. 98-0235 (Reno, January 1998).

8. M. S. Brown, W. L. Roberts, and P. A. DeBarber, "Thermometry in High-Pressure Soot-Laden Reacting Flows Via Non-Resonant Laser-Induced Gratings," AIAA Paper No. 98-0309 (Reno, January 1998).