May L. Corn
Jeffrey M. Cohen
Jerry C. Lee
Donald J. Hautman

United Technologies Research Center,
East Hartford, CT 06108

Scott M. Thawley
Christopher T. Brown
Vincent G. McDonell

Energy Research Consultants,
Laguna Hills, CA 92653

Characterization of a Superheated Fuel Jet in a Crossflow

An experiment was conducted to characterize a superheated fuel jet (Jet-A) injected into an unheated crossflow of air. The liquid phase of the fuel jet was characterized with high speed imaging and phase Doppler interferometry. The transition from a shear-atomized to a flash-atomized spray at a fuel temperature of 513 K (465°F) was observed at an ambient pressure of 1 atm, which is consistent with the bubble and dew point curves predicted for JP-8. The explosive breakup that was seen in the flash-atomized spray produced submicron droplets with a high radial momentum. This unique behavior makes superheated fuels an attractive design feature for fuel preparation devices that can employ flash boiling to enhance fuel atomization and mixing in a compact volume.
[DOI: 10.1115/1.4001978]

1 Introduction

New advances in fuel heat-sink technology that deoxygenate and enhance the thermal stability of JP-8 will lead to increases in aeroengine efficiency and thrust/weight ratio. These advances have already demonstrated fuel stability up to fuel temperatures of 589 K (600°F) [1,2]. Research plans exist [3] to extend this limit to 700–755 K (800–900°F), where pyrolytic coke deposition begins to take place. This increase in JP-8 thermal stability will allow for active fuel cooling of the engine and airframe, increasing the enthalpy of the fuel delivered to the combustor and thus improving the thermal efficiency of the propulsion system.

While the system-level benefits of this technology are apparent based on simple analyses, it is unclear how heated fuel phase changes will affect the fuel delivery and fuel injection processes. Some effects are well understood. For example, fuel boiling in the fuel system during engine transients can cause an interruption of the fuel flow to the combustor and can lead to combustor blow-out [4]. The effects of increased fuel temperature on the fuel atomization and fuel/air mixing processes are poorly understood, though, and are the focus of this paper.

In order to examine the effects of fuel heating on fuel injection, we have chosen the liquid jet in gaseous crossflow as a canonical problem that simulates many of the physical processes that are important in most practical injection devices. This problem has been widely studied for cold fuel [5,6] and provides an excellent base line. For the purpose of practicality, the current work is limited to 589 K (600°F) fuel injected into crossflowing air at ambient pressure and temperature. These limits enable the investigation of the phenomenology of superheated fuel injection with conventional diagnostics.

2 Background

A fluid is superheated when its vapor to liquid mass ratio is below its equilibrium value. The superheated state can be induced, for example, if the fluid is rapidly injected from a compressed subcooled state to a pressure below its bubble point. Aerosol cans employ this concept to flash-atomize fluids that boil at temperatures below room temperature. Because of its potential for rapid atomization and mixing, superheated fuel injection appears ideal for combustion applications that can take advantage of the flash boiling process.

Superheated fuel injection has been studied in the automotive industry [7,8] because flash boiling can occur in the spark ignition engine manifold if the manifold pressure drops below the bubble point of the fuel. Fuel heating can also occur in the injector assembly because of the heat buildup in the engine head.

With regard to aviation fuels, flash-vaporizing fuel injection systems trace back to the early Whittle engines [9], where the fuel was heated in tubes immersed in the combustor. More modern systems have avoided flash vaporization and the associated fuel heating due to coking concerns.

Recent developments [1–3] in fuel heat-sink technology have provided the opportunity to re-examine flash vaporization as a viable fuel injection tool in aeropropulsion. Studies have been performed for the application of flash vaporization of JP-8 to pulse detonation engines by researchers at AFRL [10]. Lee et al. [11] produced a model for JP-8 that simulates the thermodynamic/transport properties of the multicomponent fuel and incorporates a nonequilibrium vaporization model for superheated JP-8. One of the results from this study is a set of predicted bubble and dew point thermodynamic equilibrium curves for JP-8.

As shown in Fig. 1, the bubble and dew point curves for JP-8 are distinct but converge at the critical temperature and pressure beyond which the fluid may exist in a supercritical state. Above the bubble point curve, JP-8 exists in a subcooled, compressed liquid state. Below the dew point curve, JP-8 should exist as a vapor in equilibrium. The region bounded by the bubble and dew point curves is a transition zone in which the fluid is a mix of both liquid and vapor states. To flash-atomize fuel in a gas turbine combustor, the fuel pressure in the injector must lie above the bubble point curve and inject into a combustor chamber pressure that falls below the bubble point curve. The objectives of this study were to determine the feasibility of using superheat to induce flash atomization of a multicomponent aviation fuel and to assess the impact of flash atomization on the dispersion of a liquid jet in crossflow.

3 Experiment

3.1 Facility. The test section (Fig. 2) consisted of a 300 mm (11.8 in.) long transition section that converted a 150 mm (5.9 in.)

Contributed by the International Gas Turbine Institute (IGTI) of ASME for publication in the Journal of Engineering for Gas Turbines and Power. Manuscript received December 28, 2009; final manuscript received December 29, 2009; published online September 13, 2010. Editor: Dilip R. Ballal.

Copyright © 2011 by ASME

Downloaded 15 Jan 2011 to 129.137.89.240. Redistribution subject to ASME license or copyright; see http://www.asme.org/terms/Terms_Use.cfm

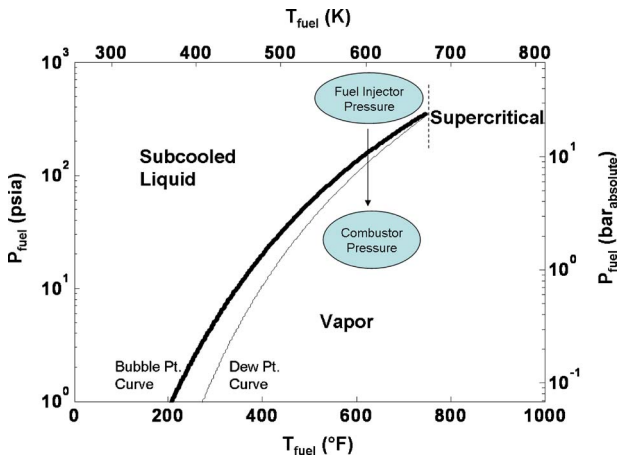

Fig. 1 Scenario for employing superheated fuel injection in a gas turbine combustor, as illustrated on the bubble and vapor curves for JP-8 from Ref. [11]

diameter round inlet duct to a square duct with inner dimensions of 69.85×69.85 mm^2 (2.75×2.75 in.^{2}). The test section was mounted vertically such that the air flowed downward. A honeycomb with cell diameters of 3.175 mm (0.125 in.) and a thickness of 101.6 mm (4 in.) was used to produce a uniform crossflow of air across the square duct. A pair of quartz windows were installed at planes perpendicular to the injection panel to allow optical access. The injector was a plain orifice with a length-to-diameter ratio of 2, a chamfered inlet with a 90 deg inclusive angle, and an exit orifice diameter of 0.508 mm (0.020 in.) (see Fig. 3).

The crossflow air velocity, nominally set at 120 m/s (394 ft/s), was established using a blower (Spencer Turbine) capable of delivering 0.72 kg/s (1.59 lb/s) at 20.7 kPa (3 psig) at the blower outlet. The blower raised the air temperature from room temperature to 316–328 K (110–130°F). The air flow was metered with a calibrated mass flow meter (Sierra Instruments). The crossflow

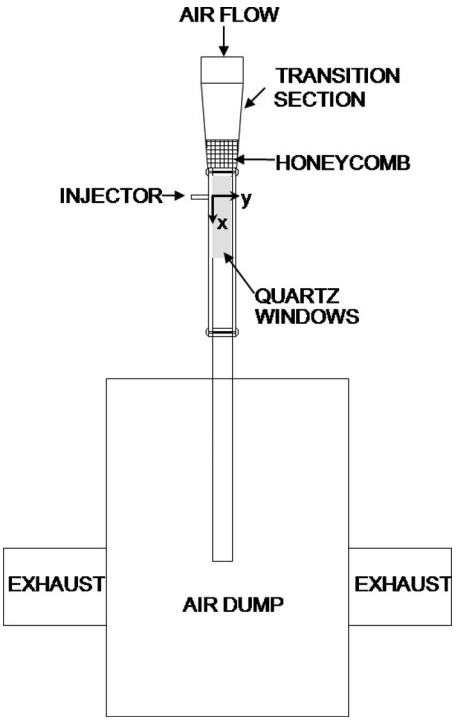

Fig. 2 Liquid jet-in-crossflow facility

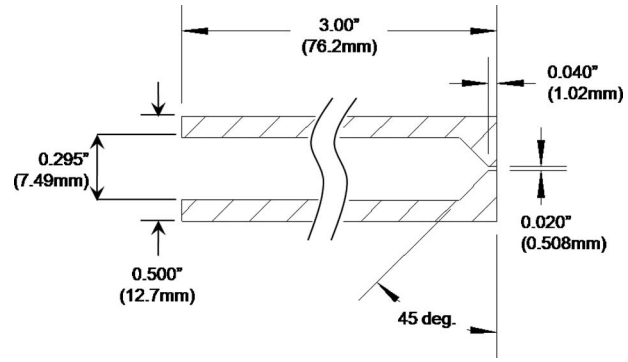

Fig. 3 Plain orifice injector (exit orifice diameter of 0.508 mm (0.020 in.)) used in the experiment

velocity was measured with a Pitot probe.

Jet-A was supplied by a gear pump capable of delivering about 3.8 l/min (1 gpm) at 2200 kPa (319 psig). The liquid flow was measured with a calibrated turbine meter (EG&G model FTO-1 with an extended range) with a capacity of 1.51 l/min (0.4 gpm) and a 0.05% accuracy with respect to the readout. The fuel pressure and temperature were monitored at a port located 76.2 mm (3 in.) upstream of the injector. A 2068 kPa (300 psig) pressure transducer (Omega model PX212-300G) with a 0.25% accuracy measured the fuel pressure, and a 3.18 mm (0.125 in.) diameter type K thermocouple measured the fuel temperature.

Jet-A was heated in two stages, as shown in Fig. 4, to prevent vaporization and coking at the heating elements and in the line prior to the injector. The first stage, a high heat loading, high pressure stage, utilized a 9 kW Tempco circulation heater and a metering valve to control the flow rate and to bring the fuel temperature to within 311 K (100°F) of the targeted condition. The second stage consisted of cartridge heaters installed immediately upstream of the injector and set at a low heat loading to raise the fuel temperature up to the test condition.

3.2 Diagnostics. High speed video (HSV) and phase Doppler interferometry (PDI) were used to characterize the fuel spray. High speed videos were acquired using a Vision Research Phantom v7.2 camera with a 105 mm fixed focal length lens. Two 500 W halogen lamps were positioned at ±15 deg angles from the rear window to backlight the spray. High speed videos of the liquid column and the near field were acquired for fuel temperatures in the range of 296–555 K (74–540°F). Because of the marked difference in spray quality between the shear-atomized and flash-atomized sprays, the camera settings were changed to

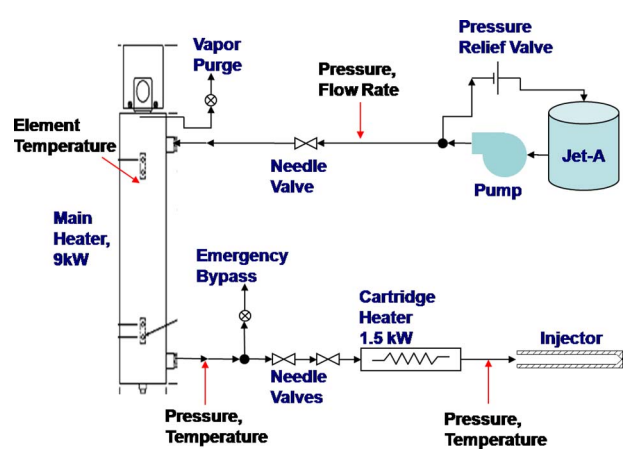

Fig. 4 Staged heating system used to heat jet fuel to 555 K (600°F)

Downloaded 15 Jan 2011 to 129.137.89.240. Redistribution subject to ASME license or copyright; see http://www.asme.org/terms/Terms_Use.cfm

Table 1 High speed imaging settings for the images acquired in the shear-atomized and flashing regimes

	Shear atomization, transition	Flash atomization
Camera lens	105 mm, f/4	105 mm, f/2.8
Camera exposure	6 μs	8 μs
Image size (No. of columns × No. of rows)	384 × 512	512 × 384
Image resolution	58 μm/pixel	42 μm/pixel
Field of view (width × height)	22.2 × 29.7 mm^2 (0.88 × 1.17 in.^{2})	21.5 × 16.1 mm^2 (0.85 × 0.63 in.^{2})

optimize the image of the mist from the flash-atomization regime. Table 1 summarizes the camera settings for the sprays from the different regimes. In all cases, a total of 5354 images were acquired at a frame rate of 15,037 frames/s, which resulted in a 356 ms time record of the spray.

PDI measurements were acquired with a TSI flow and size analyzer (FSA) system consisting of a transmitter and a receiver installed with 500 mm focal length lenses. An f/4.67 receiver lens collected refracted light at a 45 deg angle to the transmitter in order to reduce the temperature dependency of the refractive index on the phase/size relationship as compared to data acquired at the conventional 30 deg collection angle. Spray characteristics such as droplet size, droplet axial velocity (aligned with the direction of the crossflow), and volume flux were measured. Measurements were acquired along the centerline at a downstream location of $x/d=50$ and at increments of 1.27 mm (0.05 in.).

3.3 Operating Conditions. Tests were conducted at atmospheric pressure with a crossflow air velocity of approximately 120 m/s. The air temperature (110–130°F, 316–328 K) was higher than the ambient air temperature because of heat generated from the blower. A jet-to-crossflow momentum-flux ratio (J) of 25 was targeted. The volumetric flow rate of Jet-A was set at 0.254 l/min (0.067 gpm). The fuel temperature was the primary condition that was varied in the tests. For the range of fuel flows and fuel temperatures that were tested, the fuel pressure in the injector was high enough to prevent vapor lock, which the bubble and vapor curves from Ref. [11] confirmed.

Table 2 presents the temperatures and velocities of the fuel and air as well as the J and We_g for selected high speed video cases. The J and We_g presented in Table 2 account for the decrease in density, viscosity, and surface tension as the fuel temperature increases.

The PDI measurements were acquired in separate tests. Table 3 lists the operating conditions for these measurements. Case PDI1 targeted an unheated fuel condition. Because PDI data could not be acquired at the flash-atomization regime, case PDI2 was conducted at a high fuel temperature before the onset of flash atomization.

Every effort was made to conduct the high speed video and PDI tests at the same fuel temperature for the baseline unheated fuel condition. The fuel temperatures ranged from a low of 296 K (74°F) for the high speed video test (case 1) to a high of 309 K (97°F) for the PDI test (case PDI1). This difference in fuel temperature corresponded to a 4% change in surface tension and a 1.2% change in fuel density. The change in these fuel properties did not significantly affect the two dimensionless numbers that determine jet penetration and atomization—the momentum-flux ratio and the aerodynamic Weber number.

4 Discussion of Results

4.1 Spray Atomization Regimes. Each high speed video clip was viewed in its entirety to assess the structure of the liquid jet at the point of injection. Three atomization regimes were identified and are represented by selected single-frame images in Fig. 5. The first row of pictures in Fig. 5 represents sprays that were atomized by shear instability. The fuel jet in this regime had an intact core with a diameter that was approximately equal to the orifice diameter. The fuel jet behaved as a typical jet in crossflow, as observed in previous studies [5,6]. The impact of the crossflow caused the column to bend and flatten in the cross section. The impact also amplified the surface waves on the windward side of the column. The surface wave instabilities grew until a primary column breakup occurred. Fine droplets along the column length up to the primary breakup point were also stripped from the edges of the flattened column. Column stripping, which was expected given the high aerodynamic Weber numbers for these conditions (see Table 2), resulted in a dense plume of fine droplets immediately downstream of the column. With respect to an increase in fuel temperature (e.g., from the 296 K (74°F) case to either the 423 K

Table 2 Operating conditions for selected high speed video cases

Case	T_{fuel}	P_{fuel}	V_{fuel}	T_{air}	V_{air}	J	We_g
1	74°F	81.1 psia	68.9 ft/s	111°F	384 ft/s	23	332
	296 K	5.59 bars	21.0 m/s	317 K	117 m/s		
2	302°F	71.3 psia	63.3 ft/s	112°F	338 ft/s	23	419
	423 K	4.92 bars	19.3 m/s	318 K	103 m/s		
3	404°F	67.3 psia	63.6 ft/s	102°F	322 ft/s	23	513
	480 K	4.64 bars	19.4 m/s	312 K	98 m/s		
4	464°F	73.5 psia	70.9 ft/s	113°F	348 ft/s	24	733
	513 K	5.07 bars	21.6 m/s	318 K	106 m/s		
5	513°F	92.4 psia	77.8 ft/s	129°F	358 ft/s	23	1064
	540 K	6.37 bars	23.7 m/s	327 K	109 m/s		
6	530°F	102 psia	70.9 ft/s	131°F	381 ft/s	20	1125
	550 K	7.03 bars	21.6 m/s	328 K	116 m/s		

Table 3 Operating conditions for the PDI tests

Case	T_{fuel}	P_{fuel}	V_{fuel}	T_{air}	V_{air}	J	We_g
PDI1	97°F	52.5 psia	71.9 ft/s	129°F	397 ft/s	24	357
	309 K	3.62 bars	21.9 m/s	327 K	121 m/s		
PDI2	450°F	70.9 psia	74.1 ft/s	123°F	397 ft/s	21	890
	505 K	4.89 bars	22.6 m/s	324 K	121 m/s		

Downloaded 15 Jan 2011 to 129.137.89.240. Redistribution subject to ASME license or copyright; see http://www.asme.org/terms/Terms_Use.cfm

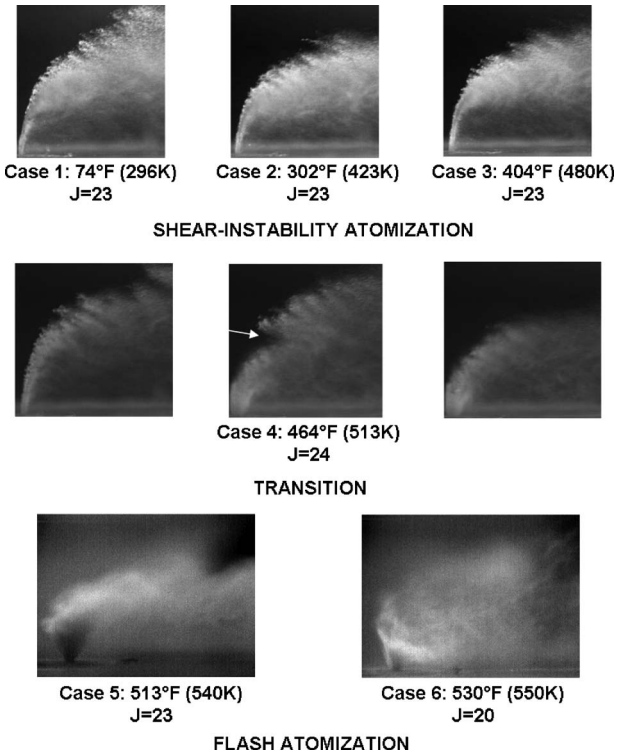

Fig. 5 Single-frame images depict three different spray regimes as the fuel temperature is increased. Images in rows 1 and 2 are 22.2×22.2 mm^2 (0.87×0.87 in.^{2}); image shown in row 3 is 16.1×21.5 mm^2 (0.63×0.85 in.^{2}).

(302°F) or the 480 K (404°F) case), a slight decrease in spray penetration was observed. The spray plume for the higher fuel temperature cases also appeared to consist of finer droplets.

The second row of images in Fig. 5 corresponds to a transition regime at 513 K (464°F) in which the fuel jet oscillated between two modes: shear-instability induced atomization and flash atomization. At this fuel temperature and at 1 atm, the fuel jet should have been in a superheated state, as predicted by the bubble and dew point curves in Fig. 1. The images representing the transition regime at 513 K (464°F) correspond to a sequence of three images taken 0.4 ms (six frames) apart in time. The first image shows an intact jet core that was similar to that of the shear-atomized jet. The second image shows the onset of flash atomization. The jet injected from the orifice rapidly expanded to form a jet structure that appeared to be three times the original jet diameter. A cusp in the upper spray trajectory (denoted by an arrow) marked the transition from the shear-atomized jet to the flash-atomized jet. Subsequent frames show the cusp being convected downstream until it disappeared by the third image shown in the row. The penetration of the liquid phase of the flash-atomized jet in the third image was lower than that of the shear-atomized jet in the first image.

The third row in Fig. 5 shows images of sprays that are fully flash atomized. The images shown here were acquired at different camera settings and image resolutions (see Table 1) in order to capture the fine spray mist formed by flash boiling. At fuel temperatures of 540 K (513°F) and 550 K (530°F), the fuel spray expanded as a conical spray that penetrated radially outward upon injection and that penetrated upstream before being turned by the crossflow. The spray appeared to consist of a dense cloud of fine mist that quickly vaporized downstream of the injection location.

The fuel injection inlet and exit pressures (1 atm) for all six cases from Fig. 5 and additional HSV cases are presented on a pressure-temperature plot that also shows the bubble and dew

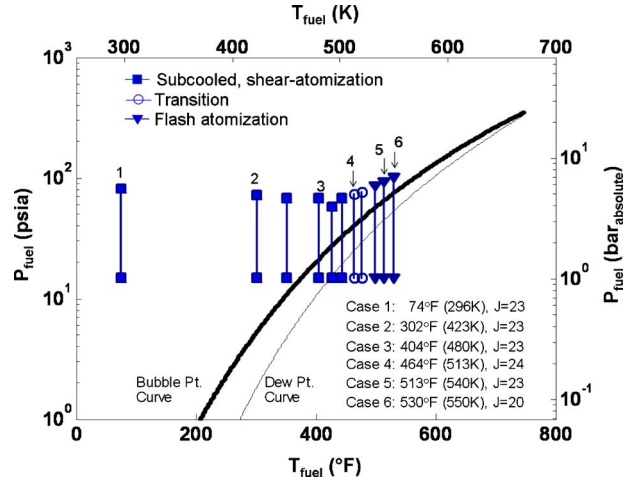

Fig. 6 Observed shear-atomized, transition, and flash-atomized fuel spray behaviors relative to the bubble and dew point curves for JP-8 [11]

point curves for JP-8 from Ref. [11] (see Fig. 6). Each case is represented by a near-vertical line that corresponded to the isenthalpic pressure drop across the orifice from an initial fuel supply pressure to the ambient environment. Because no vapor lock was observed, the fuel injection process basically involved a rapid drop in pressure that was sufficiently fast to prevent vaporization within the injector. Thus, the fuel injection through the orifice is depicted as having a nearly constant temperature throughout the process.

Each video clip was classified as being in either the shear-atomized, transition, or flash-atomization regimes. Flash boiling, which occurred in both the transition and flash-atomization regimes, was observed at fuel temperatures and pressures below the dew point curve predicted for JP-8 by Lee et al. [11].

The onset of flash atomization was specific to the design of the injector. In tests with a plain orifice injector, Brown and York [12] showed that the geometry of the orifice affected when the onset of flash atomization in a superheated liquid occurred—i.e., at the injector exit or at some distance from the exit. For the liquid jet in crossflow, this delay meant that the superheated fuel jet could initially undergo shear atomization before the flash-atomization mode began to dominate.

4.2 Spray Penetration. A time-averaged image was derived for each video segment in order to compare the penetration of the shear- and flash-atomized sprays. The spray penetration corresponded to the maximum spray height as a function of the downstream distance from the injection point. Figure 7 shows the spray penetration extracted from the images from the shear-atomized (cases 1–3) and flash-atomized (cases 5 and 6) regimes. The curves for the shear-atomized cases verified that the fuel jet at room temperature (case 1) penetrated farther than the heated jets (cases 2 and 3).

While the flash-atomized jets at temperatures of 540 K (513°F) and 550 K (530°F) (cases 5 and 6) produced nearly identical penetration curves, these curves were significantly different from the curves for the shear-atomized cases despite having similar momentum-flux ratios. In particular, the flash-atomized sprays had an initial conic shape and a lower penetration height. Flash atomization resulted from the rapid expansion of vapor bubbles in the fuel, which shattered the fuel upon injection and imparted enough radial momentum to cause the spray to penetrate upstream into the crossflow. The conical spray consequently changed the interaction between the jet with the crossflow. This, along with the vaporization of the fine spray generated by the flashing jet, resulted in the low penetration of the liquid phase.

Downloaded 15 Jan 2011 to 129.137.89.240. Redistribution subject to ASME license or copyright; see http://www.asme.org/terms/Terms_Use.cfm

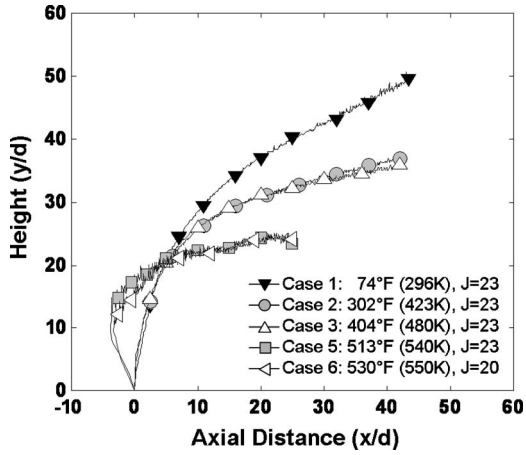

Fig. 7 Upper spray penetration curves from time-averaged images for shear-atomized and flash-atomized sprays

Figure 8 compares the results for case 1 (shear-instability atomization) and case 6 (flash atomization) with the upper spray trajectories predicted by liquid jet-in-crossflow correlations from Becker and Hassa [6] and Wu et al. [13]. The Becker and Hassa correlation was derived from shadowgraphs acquired from an unheated kerosene jet in crossflow at varying ambient pressures and is valid for the ranges of J and We_g in this experiment and for x/d between 2 and 22. The correlation from Wu et al. [13] was derived from PDI measurements of a water jet injected into a crossflow under atmospheric temperature and pressure. The Wu et al. correlation performed better than the Becker and Hassa correlation in predicting the spray trajectory at 296 K (74°F) (case 1). The discrepancy in the predicted trajectories can be caused by various factors that included different flow boundary conditions (e.g., orifice inlet geometries and possibly crossflow velocity profiles) and different measurement techniques that were applied in the two studies to acquire data for the correlations. Both correlations from Refs. [6,13] did predict a slightly lower spray penetration for the high fuel temperature condition (case 6: 550 K (T_{fuel}=530°F)) because the momentum-flux ratio was lower (J=20). However, both correlations did not sufficiently predict the large difference in penetration observed between cases 1 and 6.

The discrepancy between the predicted trajectories and the measured liquid penetration of the flashing spray (case 6) suggested that the liquid jet-in-crossflow correlations from Refs. [6,13], which are a function of the momentum-flux ratio and the axial distance, needed to account for other physical phenomena associated with the flash-atomized jet. A correlation from Stenzler et al. [14], which accounted for column bending effects by including a liquid viscosity term, was applied to the same case 1 and case 6 conditions. However, the Stenzler et al. correlation—obtained by testing various liquids at room temperature—predicted that the penetration would increase for higher fuel temperatures, which was contrary to what was observed.

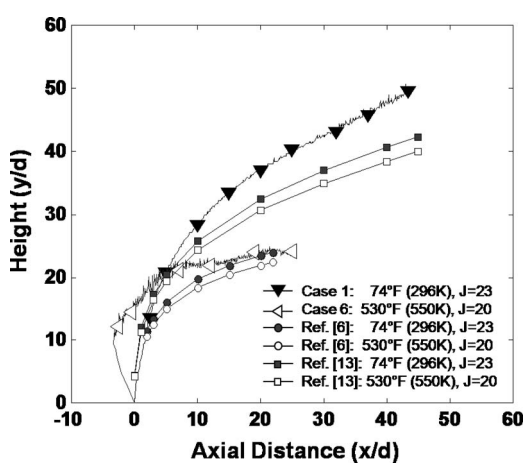

Fig. 8 Comparison between the trajectories predicted by kerosene [6] and water [13] jet-in-crossflow correlations with the results for cases 1 and 6 (296 K (74°F) and 550 K (530°F))

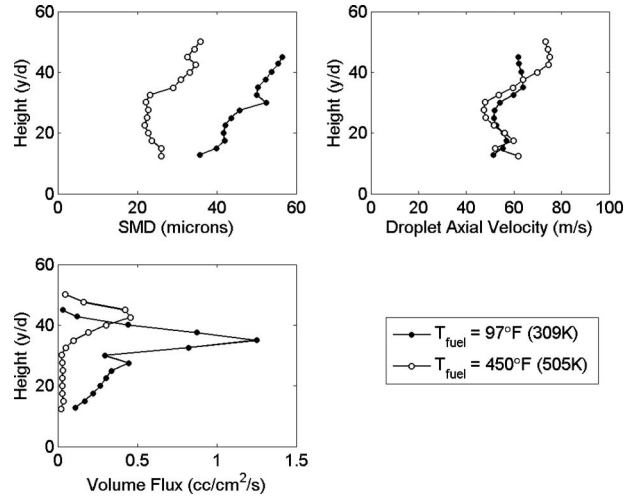

Fig. 9 Droplet SMD, droplet axial velocity, and liquid volume flux profiles for the 309 K (97°F) and 505 K (450°F) fuel jets in the shear-atomized regime

Effervescent atomization involves the introduction of a pressurized gas into the liquid prior to injection. Upon injection, the gas rapidly expands to shatter the liquid in a similar manner as flash atomization. Correlations from Ghenai et al. [15] for an effervescent-atomized fuel jet in crossflow included the Ohnesorge number and a gas to liquid mass flow ratio. However, the study by Ghenai et al. found that the addition of gas did not significantly change the spray penetration.

Based on the examination of the spray images, it appeared that the droplet size distribution and velocities were important in determining the penetration of the spray. Measurements of these quantities will be discussed in the next section.

4.3 Atomization Quality. PDI results were acquired at a downstream x/d of 50 at fuel temperatures of 309 K (97°F) and 505 K (450°F) (shear-atomized liquid jet just before the transition regime). PDI measurements were also attempted for a flash-atomized spray at 547 K (525°F) at axial distances (x/d) of 25 and 50, but the PDI instrument was not capable of acquiring reliable measurements in the dense spray plume of submicron droplets. This finding confirmed that the flash-atomized spray produced a fine mist of droplets within an x/d of 25.

The PDI data for the shear-atomized cases can still reveal information regarding the effect of fuel temperature on spray breakup. Figure 9 presents the droplet Sauter mean diameter (SMD), mean droplet axial velocity, and liquid volume flux profiles for the 309 K (97°F) and 505 K (450°F) cases. The effect of fuel temperature was clearly seen in the SMD and volume flux profiles. A higher fuel temperature reduced the overall magnitude of the SMD profile. Atomization was the primary mechanism that produced the smaller SMD values in the 505 K fuel case. velocity, the increase in fuel temperature from 309 K (97°F) to 505 K (450°F) lowered the fuel density and the surface tension such that the aerodynamic Weber number was 2.5 times higher in the 505 K (450°F) fuel jet. We would thus expect to see smaller droplet sizes in the 505 K (450°F) case.

Downloaded 15 Jan 2011 to 129.137.89.240. Redistribution subject to ASME license or copyright; see http://www.asme.org/terms/Terms_Use.cfm

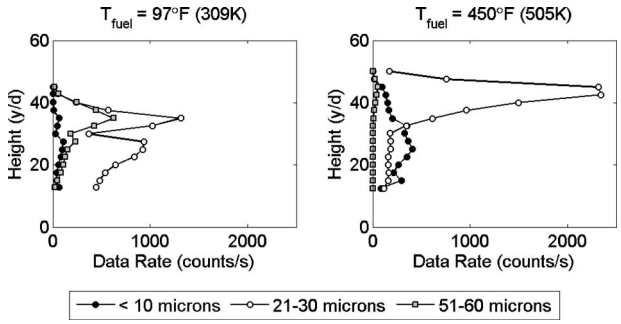

Fig. 10 Data rates for different droplet size classes measured for the 309 K (97°F) and 505 K (450°F) fuel jets in the shear-atomized regime at x/d=50

Despite the difference in the SMD profiles, the droplet axial velocities (the component aligned with the direction of the crossflow) for both cases were nearly identical up to a height of y/d =40. Both the 309 K (97°F) and 505 K (450°F) cases showed similar velocity deficits in the wake of the column, which suggested a similar wake structure downstream of the column for both cases that affected small and large droplets equally. In the upper portion of the spray, the shearing force of the crossflow at the interface caused the smaller droplets from the 505 K (450°F) case to accelerate to a higher axial velocity than the larger droplets from the 309 K (97°F) case.

The liquid volume flux profiles showed that the 505 K (450°F) case produced a spray with a relatively low liquid volume flux and with a peak location that was 3.81 mm (0.15 in.) higher than that for the 309 K (97°F) case. The composition of the spray in terms of drop size can be obtained by extracting the PDI data rates for selected drop size classes (see Fig. 10). The 309 K (97°F) case was comprised of a higher occurrence of large drop sizes (e.g., the 51–60 μm class) compared to the 505 K (450°F) case because of a lower degree of atomization coupled with low vaporization rates. While the average droplet velocities for the two conditions were similar, the higher population of larger drops produced the higher volume flux profile for the 309 K (97°F) condition (see Fig. 9).

5 Conclusions

The effect of superheating a liquid fuel jet was investigated in order to determine its atomization and dispersion in an unheated crossflow at 1 atm. An experiment was designed and built to heat Jet-A to temperatures up to 589 K (600°F). The fuel jet transitioned from a subcooled, compressed liquid state to a flash-atomized spray upon injection as temperatures approached 513 K (464°F). The flash atomization of Jet-A at this temperature occurred in the region below the dew point curve for JP-8 that was predicted by Lee et al. [11].

In terms of the spray characteristics, increasing the fuel temperature in the subcooled state increased the formation of smaller droplets via shear atomization. The tendency of hotter liquid jets to produce smaller droplets was expected because the changes in fuel properties resulted in a higher aerodynamic Weber number. With a sufficient increase in temperature, flash-atomization occurred. Vapor bubbles formed in the fuel jet rapidly expanded upon injection into a lower-pressure environment. This rapid expansion improved atomization and caused the fuel to penetrate radially outward from the orifice as a conical spray, thus altering the jet's interaction with the crossflow significantly. The primary benefit of flash atomization was the generation of fine droplets that vaporized rapidly. However, further study is needed to determine how the flash-atomized fuel spray impacts fuel-air mixing relative to the shear-atomized fuel spray.

Deoxygenation technologies and fuel formulations with higher thermal stability will enable fuel to attain a superheated state provided that there is enough heat available for absorption. The fuel injector will need to be designed—perhaps as a staged injector—to accommodate both subcooled and flash-atomized sprays across the entire flight cycle. Correlations that describe the penetration and mixing of the liquid and gaseous phases of the flash-atomized spray are needed to help with designing such a fuel injector. Various liquid jet-in-crossflow correlations did not predict the significant decrease in liquid penetration that occurred when the fuel was heated to a superheated state that induced flash atomization. Additional work with different diagnostic techniques should be performed to characterize the vapor fuel distribution, to quantify the resulting fuel-air mixture, and to derive correlations suitable for injector design.

Acknowledgment

The authors wish to thank Jonathan Baastians and Ulises Mondragon from ERC for their assistance in designing, building, and conducting the experiments. The authors also wish to acknowledge Catalin Fotache from UTRC for his technical guidance.

Nomenclature

ρ_l = liquid density
ρ_a = air density
σ = liquid surface tension
x = axial distance from the center of the orifice
y = height from the orifice exit plane
d = orifice diameter
V_l = liquid jet velocity
V_a = crossflowing air velocity
J = liquid to gas momentum-flux ratio, $\rho_l V_l^2/\rho_a V_a^2$
We_g = aerodynamic Weber number, $\rho_a V_a^2 d/\sigma$

References

[1] Spadaccini, L. J., Tillman, T. G., Gentry, J., Chen, A., and Edwards, T., 2008, "Fuel Stabilization Unit Proof of Concept Engine Demonstration," presented at the 44th AIAA/ASME/SAE/ASEE Joint Propulsion Conference, Hartford, CT, AIAA Paper No. AIAA-2008-5157.
[2] Spadaccini, L. J., and Huang, H., 2003, "On-Line Fuel Deoxygenation for Coke Suppression," ASME J. Eng. Gas Turbines Power, **125**, pp. 686–692.
[3] Edwards, T., 1998, "Prospects for JP-8+225: A Stepping Stone to JP-900," presented at the 34th AIAA/ASME/SAE/ASEE Joint Propulsion Conference, Cleveland, OH, AIAA Paper No. AIAA-98-3532.
[4] Rosfjord, T. J., and Cohen, J. M., 1995, "Evaluation of the Transient Operation of Advanced Gas Turbine Combustors," J. Propul. Power, **11**(3), pp. 497–504.
[5] Madabhushi, R. K., Leong, M. Y., and Hautman, D. J., 2004, "Simulation of the Break-Up of a Liquid Jet in Crossflow at Atmospheric Conditions," ASME Paper No. GT2004-54093.
[6] Becker, J., and Hassa, C., 2002, "Breakup and Atomization of a Kerosene Jet in Crossflow at Elevated Pressure," Atomization Sprays, **12**(1-3), pp. 49–68.
[7] Adachi, M., McDonell, V. G., Tanaka, D., Senda, J., and Fujimoto, H., 1997, "Characterization of Fuel Vapor Concentration Inside a Flash Boiling Spray," SAE Paper No. 970871.
[8] Kawano, D., Goto, Y., Odaka, M., and Senda, J., 2004, "Modeling Atomization and Vaporization Processes of Flash-Boiling Spray," SAE Paper No. 2004-01-0534.
[9] Lefebvre, A. H., 1983, *Gas Turbine Combustion*, Hemisphere, Washington, DC.
[10] Tucker, K. C., King, P. I., and Schauer, F. R., 2008, "Hydrocarbon Fuel Flash Vaporization for Pulsed Detonation Combustion," J. Propul. Power, **24**(4), pp. 788–796.
[11] Lee, J., Madabhushi, R., Fotache, C., Gopalakrishnan, S., and Schmidt, D., 2009, "Flashing Flow of Superheated Jet Fuel," Proc. Combust. Inst., **32**(2), pp. 3215–3222.

Downloaded 15 Jan 2011 to 129.137.89.240. Redistribution subject to ASME license or copyright; see http://www.asme.org/terms/Terms_Use.cfm

[12] Brown, R., and York, J. L., 1962, "Sprays Formed by Flashing Liquid Jets," AIChE J., **8**(2), pp. 149–153.
[13] Wu, P. K., Kirkendall, K. A., Fuller, R. P., and Nejad, A. S., 1998, "Spray Structures of Liquid Jets Atomized in Subsonic Crossflows," J. Propul. Power, **14**(2), pp. 173–182.
[14] Stenzler, J. N., Lee., J. G., Santavicca, D. A., and Lee, W., 2006, "Penetration of Liquid Jets in a Cross-Flow," Atomization Sprays, **16**, pp. 887–906.
[15] Ghenai, C., Sapmaz, H., and Lin, C., 2009, "Penetration Height Correlations for Non-Aerated and Aerated Transverse Liquid Jets in Supersonic Cross Flow," Exp. Fluids, **46**(1), pp. 121–129.

Downloaded 15 Jan 2011 to 129.137.89.240. Redistribution subject to ASME license or copyright; see http://www.asme.org/terms/Terms_Use.cfm