Design Procedure of a Novel Microturbine Low NO_x Conical Wire-Mesh Duct Burner

Omar B. Ramadan
e-mail: omarbabr@gmail.com

J. E. Donald Gauthier
e-mail: donald_gauthier@carleton.ca

Mechanical and Aerospace Engineering Department,
Carleton University,
Ottawa, ON, K1S 5B6, Canada

Patrick M. Hughes
e-mail: phughes@nrcan.gc.ca

Robert Brandon
e-mail: rob.brandon@nrcan.gc.ca

CANMET Energy Technology Centre,
Natural Resources Canada,
Nepean, ON, K1A 1M1, Canada

Nowadays, air pollution and climate change have become a global environmental problem. As a result, government regulations worldwide are becoming increasingly stringent. This has led to an urgent need to develop new designs and methods for improving combustion systems to minimize the production of toxic emissions, such as nitrogen oxides. Microturbine based cogeneration units are one of the interesting alternatives for combined electrical power and heat generation (CHP). Microturbine CHP technology still needs to be developed to increase efficiency and heat-to-power ratio and to improve operating flexibility. This can all be obtained by adding a duct burner to the CHP unit. This paper documents the design process for a novel low NO_x conical wire-mesh duct burner for the development of a more efficient microcogeneration unit. This burner provides the thermal energy necessary to raise the microturbine exhaust gas temperature to increase the heat recovery capability. The duct burner implements both lean premixed and surface combustion techniques to achieve low NO_x and CO emission levels. The design process includes a set of preliminary design procedures relating the use of empirical and semiempirical models. The preliminary design procedures were verified and validated for key components, such as the duct burner premixer, using the laser sheet illumination (LSI) technique. The LSI was used to study the mixing process inside the premixer fitted with different swirlers. The designed duct burner successfully operated in a blue flame mode over a wide range of conditions with NO_x emissions of less than 5 ppmv and CO emissions of less than 10 ppmv (corrected to 15% O_2).
[DOI: 10.1115/1.2968867]

1 Introduction

The wire-mesh duct burner (DB) for microturbine (MT) CHP units presented in this paper is a new concept. The design procedure was derived from elements available in the literature and from observations of many previously developed gas turbine combustors and of radiant or conventional burners. The goal of this work was to design a DB to provide the thermal energy necessary to raise the microturbine exhaust gas temperature (MTEGT) to the required temperature while maintaining low NO_x and CO emission levels. The preliminary design procedures involved in the design and construction of the mesh DB are discussed in this paper. At the first stages of the design, the LSI technique was used to verify some of the design procedures implemented, such as the one used to design the DB premixer. The LSI results indicated that the premixer effectively mixed the two fluid streams. After the system was designed and built, it was tested, and successful combustion results were obtained.

2 Design Strategies

The overall DB design strategy (Fig. 1) followed in this paper starts by defining and understanding the concept, completing a literature review, and selecting the type of the burner; these parts were covered in a previous publication [1]. Second, the design process, which is the topic of this paper, involves five main components: (1) Design specifications and requirements: these lead to the definition of the design parameters. (2) Preliminary design: In this step the overall dimensions of the DB were determined. (3) Mechanical design: in a coordinated way this step elevates the design concept to production drawing. Solid models (3D drawing) are also needed for a detailed design step (e.g., for thermal analysis and computational fluid dynamics (CFD) modeling). (4) Detailed design: the performance of key components (e.g., DB premixer) was verified and validated using LSI and CFD. (5) DB manufacturing and testing for evaluation. Only the first two steps will be covered in this paper. Part of the experimental testing was covered in previous publications by the same authors [1,2].

3 Specifications

The basic requirements for the DB design were (1) low manufacturing cost, (2) simple compact design, (3) easy installation and startup, (4) good ignition and stable and efficient combustion, (5) reliable and safe operation, (6) low burner pressure drop, (7) low gas pressure, (8) operation on natural gas (NG), (9) controlled generation of NO_x to meet environmental regulations, and (10) good load control. During the preliminary design stage, the DB design point was fixed, with the inputs and specification listed in Table 1.

4 Preliminary Design

The DB preliminary design procedure is the main topic of this paper in which the design steps were covered and the overall dimensions of the DB were determined. The DB preliminary design was covered by two main tasks referred to in this paper as (1) the combustion problem and (2) the fluid dynamics problem (Fig. 1).

4.1 The Combustion Problem. The concept was to design a DB that can produce stable flame and ultralow NO_x. To accomplish this, the DB was designed to operate in the lean burn mode, and the combustion process was to be completed over the surface

Contributed by the International Gas Turbine Institute of ASME for publication in the Journal of Engineering for Gas Turbines and Power. Manuscript received April 5, 2008; final manuscript received April 10, 2008; published online July 13, 2009. Review conducted by Dilip R. Ballal. Paper presented at the ASME Turbo Expo 2008: Land, Sea and Air (GT2008), Berlin, Germany, June 9–13, 2008.

Copyright © 2009 by Her Majesty the Queen in Right of Canada, as represented by the Minister of Natural Resources

Downloaded 15 Jan 2011 to 129.137.89.240. Redistribution subject to ASME license or copyright; see http://www.asme.org/terms/Terms_Use.cfm

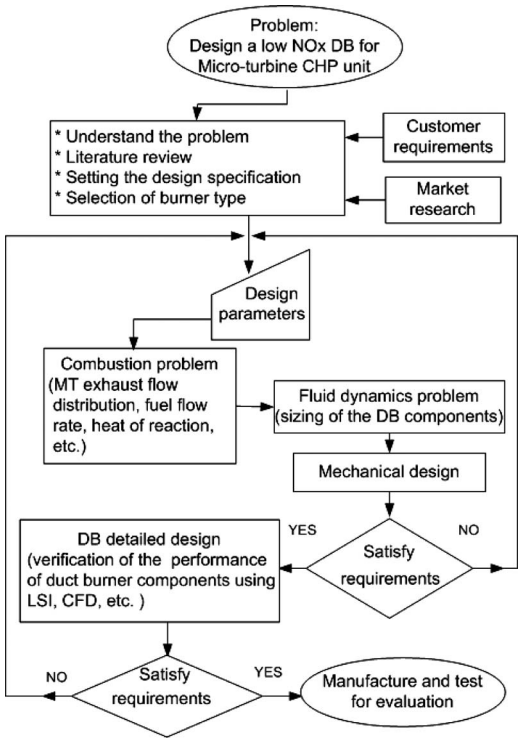

Fig. 1 Overall duct burner design strategy

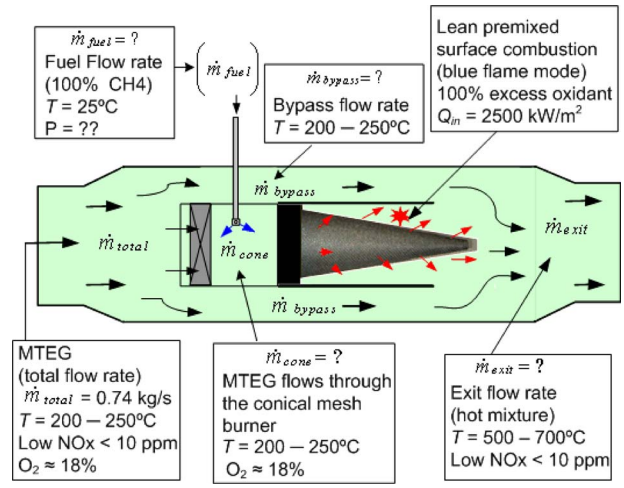

Fig. 2 DB schematic (combustion problem)

of a conical wire-mesh burner in the blue flame mode. The combustion calculations based on the concept (lean premixed surface combustion) are briefly presented in this section.

Figure 2 shows the schematic of the DB with the quantities to be calculated during the combustion problem. This problem sought to determine the flows of exhaust gases and fuel needed to obtain the desired mode of operation and final temperature. Calculations were based on the 70 kW MT at its design point (Table 1). Referring to Fig. 2, the oxygen contained in the MTEG from the CHP unit recuperator is split into two streams. One stream bypasses the conical burner, and the other burns with the added fuel inside the DB and over the conical burner. The bypass exhaust stream is then mixed with the hot products of combustion, diluting and cooling these. The DB fuel was natural gas and was assumed to be 100% methane.

4.1.1 Mass Flow Rate. Combustion calculations and the determination of the adiabatic flame temperature and heat of reaction were carried out using the JANNAF tables [3]. We assumed perfect mixing, completed combustion reactions, no dissociation, and no heat losses. In addition, it was assumed that the only species present in the product of combustion, for the stoichiometric case, were CO_2, H_2O, and N_2 and, in the lean case, CO_2, H_2O, N_2, and O_2. The MTEG were analyzed and used as an oxidant in the DB combustion process. The measured components of NO_x, SO_2, and CO are of little relevance to the combustion heat release calculation because they are present in very small quantities. Hence, for

Table 1 Duct burner design point and specifications

Parameter	Design values
Ambient temperature	25°C (298 K)
Operating pressure	Atmospheric
Microturbine used	MT70 kW IR CHP unit
Microturbine EGT range	200–250°C
Microturbine exhaust pipe diameter	0.254 m (10 in.)
Microturbine exhaust gases composition (vol %)	CO_2 (1.3%), O_2 (18%), N_2 (78.6%), H_2O (2.35%)
Micro-turbine CHP heat recovery system status	Disabled
DB exhaust temperature range	500–700°C
DB inlet flow rate	0.745 kg/s
DB combustion efficiency	>99.9%
Maximum pressure drop across DB	≤249 Pa (1 in. H_2O)
DB fuel type	Natural gas (100% CH_4)
Energy content of methane (LHV)	50,050 kJ/kg
Methane auto-ignition temperature	580°C
Methane standard flame speed	0.43 m/s
Fuel line pressure	2–5 psi(gauge)
Excess oxidant (in combustion zone)	100% (Ø=0.5)
Combustion concept	Surface combustion
Emission limit for NO_x and CO	Less than 10 ppm
Type of burner	Porous (wire-mesh) burner
Porous burner geometry	Conical shape
Operating mode	Blue flame mode
Combustion intensity	2500 kW/m²
Material for all the DB components	Stainless steel (SS)

Downloaded 15 Jan 2011 to 129.137.89.240. Redistribution subject to ASME license or copyright; see http://www.asme.org/terms/Terms_Use.cfm

convenience, they were combined together and presented as CO in the calculation. Therefore the simplified MTEG composition used in the calculation as an oxidant was

$$\text{Oxidant} = (x_1O_2 + x_2CO_2 + x_3CO + x_4H_2O + x_5N_2) \quad (1)$$

The combustion equations (mole basis) used for the stoichiometric case (Eq. (2)) and the lean burn case (Eq. (3)) are

$$aCH_4 + m_{\text{stoich}}(\text{oxidant}) = bCO_2 + cH_2O + dN_2 \quad (2)$$

$$a_1CH_4 + m_{\text{act}}(\text{oxidant}) = b_1CO_2 + c_1H_2O + d_1N_2 + fO_2 \quad (3)$$

where the constants $(a, a_1, x_1, x_2, x_3, x_4, x_5, b, b_1, c, c_1, d, d_1, f)$ are gas mole fractions. The coefficients (m_{stoich}) and (m_{act}) are the stoichiometric and actual mole fractions of the oxidant used in the combustion process.

The atom conservation principle was used to solve the combustion equations for the values of the relative mole fractions of the reactants and products, and then the stoichiometric $((\text{O/F})_{\text{stoich}})$ and actual oxidant-to-fuel ratios (by mass) were computed as follows:

$$(\text{O/F})_{\text{stoich}} = \left(\frac{\dot{m}_{\text{oxid}}}{\dot{m}_{\text{fuel}}}\right)_{\text{stoich}} = \left(\frac{m_{\text{stoich}}}{a}\right)\frac{\text{MW}_{\text{oxid}}}{\text{MW}_{\text{fuel}}} \quad (4)$$

$$(\text{O/F})_{\text{act}} = \left(\frac{\dot{m}_{\text{oxid}}}{\dot{m}_{\text{fuel}}}\right)_{\text{act}} = \left(\frac{m_{\text{act}}}{a_1}\right)\frac{\text{MW}_{\text{oxid}}}{\text{MW}_{\text{fuel}}} \quad (5)$$

where $\dot{m}_{\text{oxid}}$, $\dot{m}_{\text{fuel}}$, MW_{oxid}, and MW_{fuel} are, respectively, the mass flow rate of the oxidant, the fuel flow rate, the molecular weight of the oxidant, and the molecular weight of the fuel. Knowing the total mass flow rate of the MTEG, the design equivalence ratio, and other design parameters listed in Table 1, the fuel flow rate and the amount of oxidant needed for combustion were computed.

This section describes the equations used during the computation. The overall actual oxidant-to-fuel ratio $((\text{O/F})_{\text{ov-actual}})$ was estimated using the following equation:

$$(\text{O/F})_{\text{ov-act}} = \frac{\text{LHV} - (C_P(T_{\text{av}}) \times (T_{\text{exit}}))}{C_P(T_{\text{av}}) \times (T_{\text{exit}} - T_{\text{inlet}})} \quad (6)$$

where $C_p(T_{\text{av}})$ is the constant pressure specific heat of gases at the average temperature between the DB exit (T_{exit}) and inlet temperatures (T_{inlet}).

The equivalence ratio (ϕ) is defined as follows:

$$\phi = \frac{(\text{O/F})_{\text{stoich}}}{(\text{O/F})_{\text{act}}} \quad (7)$$

The fuel flow rate was calculated using

$$\dot{m}_{\text{fuel}} = \frac{\dot{m}_{\text{total}}}{(\text{O/F})_{\text{ov-act}}} \quad (8)$$

The amount of oxidant needed for the combustion process to produce blue flame over the conical mesh burner surface was estimated using

$$\dot{m}_{\text{cone}} = \frac{\dot{m}_{\text{fuel}}}{(\phi_{\text{local}}/(\text{O/F})_{\text{stoich}})} \quad (9)$$

where ϕ_{local} is the local equivalence ratio (combustion zone).

4.1.2 Flame Temperature (T_{flame}). Assuming a steady flow process, the absence of work interaction, the fact that the oxidant and the combustion gases are ideal gases, and the negligible change in potential and kinetic energies, the steady flow energy equation leads to

$$\sum n_{\text{prod}}\left(\bar{h}_f + \int_{T_{\text{ref}}}^{T} \bar{C}_{Pi}(T)dT\right)_{\text{prod}} = \sum n_{\text{react}}\left(\bar{h}_f + \int_{T_{\text{ref}}}^{T} \bar{C}_{Pi}(T)dT_{\text{react}}\right) \quad (10)$$

where n_{prod}, n_{react}, $\bar{h}_f$, and $\bar{C}_{Pi}(T)$ are, respectively, the products' and the reactants' component mole fractions, the enthalpy of formation, and the constant pressure specific heat (on a molar basis). T and T_{ref} are the actual and reference (298.15 K) temperatures. The solution for the adiabatic flame temperature is a trial-and-error solution of Eq. (10). The T_{flame} for nondissociating products of combustion, such as those shown in Eqs. (2) and (3), is usually called the adiabatic frozen-flame temperature [4].

4.1.3 Burner Heat Release. The heat of reaction is the heat transferred for a certain chemical reaction, such as that presented in Eq. (3), when the reactants and the products are at the same temperature and the pressure is kept constant. Then the steady flow energy equation leads to

$$Q = \sum n_{\text{prod}}(\bar{h}_f + \bar{h} - \bar{h}^\circ)_{\text{prod}} - \sum n_{\text{react}}(\bar{h}_f + \bar{h} - \bar{h}^\circ)_{\text{react}} \quad (11)$$

where $\bar{h}$ and $\bar{h}^\circ$ are the enthalpy of the gas at the reaction temperature and the reference enthalpy of the reaction (on a molar basis).

Expanding Eq. (11) by replacing the sums with the appropriate terms and their values leads to the solution of the heat release equation.

4.1.4 Homogeneous Burning Velocity (HBV). The burning velocity is an important parameter that must be accounted for in the design of the DB because it is desirable that the velocity of the oxidant through the mesh burner would be equal to the flame speed [5]. If this happens, the flame will be stable on the wire-mesh surface. A simplified form of the Semenov equation [6] was used in the present work for the estimation of the burning velocity during the DB design process,

$$\text{HBV} = \sqrt{\frac{\text{KT}_{\text{um}}^2 T_{\text{flame}}^5 \exp\left(\frac{-E}{R_u T_{\text{flame}}}\right)}{(T_{\text{flame}} - T_{\text{um}})^3}} \quad (12)$$

where K, T_{um}, E, and R_u are, respectively, the constant of proportionality, the unburned mixture temperature, the activation energy, and the universal gas constant.

4.1.5 Combustion Problem Closing. The results show that approximately 75% of the MT exhaust had to bypass the combustion zone to achieve the design equivalence ratio of 0.5. The remaining exhaust is the amount of oxidant to be burned with the appropriate amount of methane (it was calculated to be 0.0048 kg/s) over the DB conical mesh surface. This combustion was expected to produce low NO_x combustion products, with a temperature of 1250°C and 235 kW of heat release at the mesh surface. The combustion products were then mixed with bypass exhaust, and the final temperature of the mixture was in the range of 500–700°C.

4.2 The Fluid Dynamics Problem. This section discusses the following general topics: (1) the geometry of the DB, (2) the study and design of the proper mixing system, (3) the establishment of a way to deliver the different flows to each zone, and (4) the study of the method to protect the flame from the bypass flow. A concentric-duct-and-conical-burner design was considered (Fig. 3). The different dimensions shown in Fig. 3 were calculated in this phase. The presence of the metal fiber burner and its support structure in an exhaust gas stream contained within an exhaust duct of a MT unit will cause a resistance to the flow and a result-

Downloaded 15 Jan 2011 to 129.137.89.240. Redistribution subject to ASME license or copyright; see http://www.asme.org/terms/Terms_Use.cfm

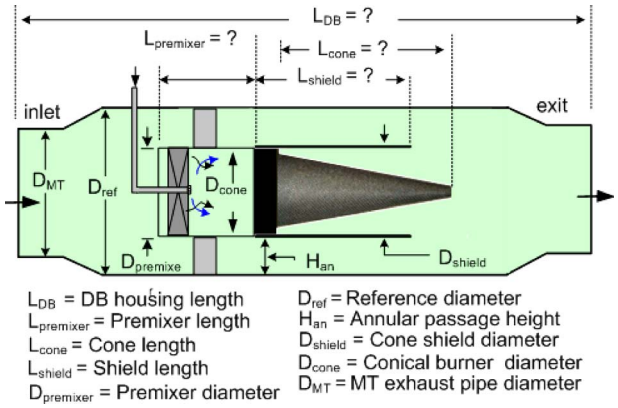

Fig. 3 DB schematic (fluid dynamics problem)

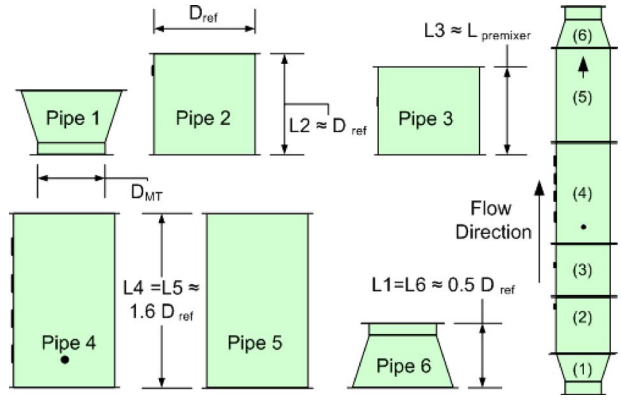

Fig. 5 DB housing components and assembly (right)

ing pressure drop. The total pressure drop due to the DB was specified to be no more than 1.0 in. of water to maintain the MT efficiency.

Figure 4 shows the fluid dynamics problem flowchart in which the five main components of the DB are listed. A short description of the geometrical design parameters and design steps used for each component will be provided after a review of some general common design parameters in this section.

4.2.1 Design Parameters

4.2.1.1 DB materials. Materials appropriate for burners or any combustion system design, which would give the required life and performance for most applications, are available. In the present design, grade 304 stainless steel (SS) was selected as the material for the test DB. Grade 304 SS provides acceptable performance and life. Standard SS pipes, tubes, and sheets were used for the manufacturing of the DB.

4.2.1.2 DB reference velocity (V_{ref}). Following the approach used by gas turbine combustor designers [7–9], the reference velocity in the present work was defined as the mean velocity across the plane of the maximum cross-sectional area of the DB housing. The DB inlet velocity was measured by traversing the Pitot-static tube across the MT exhaust pipe, and it was measured to be 18 m/s. The V_{ref} was calculated after the expansion at the maximum cross-sectional area using the continuity equation. It was calculated to be 12 m/s.

4.2.1.3 DB reference diameter (D_{ref}). The DB reference diameter is the maximum diameter of the DB housing where the V_{ref} was defined. The diameter was assigned based on different factors such as DB total pressure drop, flame speed, MT exhaust gas mass flow rate, DB inlet velocity, MT exhaust pipe diameter, and available standard pipe sizing for cost saving. Compromise must be made between the mentioned parameters to select the DB reference diameter. However, the DB size must be adequate to allow the insertion of probes for measurements without sharp disturbance of the flow. At the same time, the DB must be small to be practical for a MT CHP package application. The D_{ref} was selected to be 0.315 m (12.39 in.). The cross-sectional area based on this diameter is the reference area.

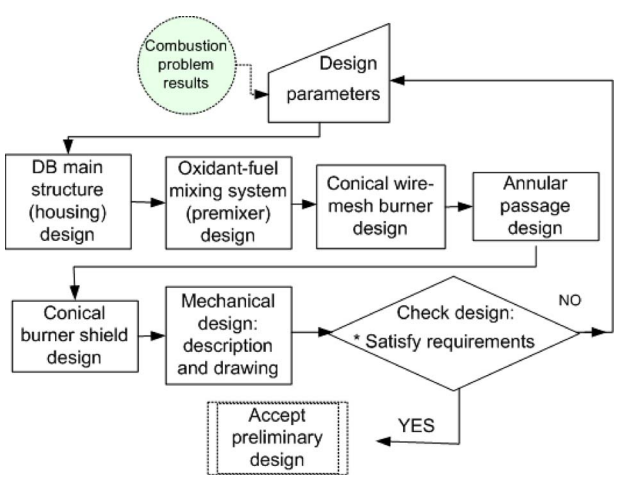

Fig. 4 Fluid dynamics problem flowchart

4.2.2 Burner Housing. The DB housing was composed of sections. The sizing of these sections affects important performance aspects such as pressure drop, mixing, and flow stability. In addition, the size of some of the DB sections was controlled by the internal pieces located inside these sections. As many geometrical parameters were studied in the present work, ease of disassembly was also considered. Figure 5 shows a schematic of the DB housing's main components with their dimensions. SS standard pipe pieces were used for the DB housing. The dimensions of the pipe used were (schedule 10S) 0.315 m (12.39 in.) inner diameter and 4.6 mm (0.18 in.) wall thickness. The DB housing consists of six main pieces. Pipes 1 and 6 are the DB inlet and exit pipes. Both are similar. They connect the DB with the MT exhaust system. The expansion to a larger area is used to reduce the velocity for flame stability reason, to reduce pressure loss, and to gain more space for measurement. Pipe 2 is the premixer inlet pipe, which was made to stabilize the flow after the diffuser. Pipe 3 is the premixer housing pipe. The length of this section was made equal to the premixer length (0.3 m). The premixer via its supports was mounted in this section. Pipe 4 is the conical wire-mesh burner housing, where the visualization ports are located. Pipe 5 is the exhaust pipe, where the hot products mix with the bypassed flow. All the parts of the DB are flanged together to form a 2 m long test rig with 30 probing ports and 4 sight ports.

This section describes the equations used during the computation of the duct housing components. The diffuser design formula used was based on the area ratio [8], which was defined as the ratio between the diffuser exit and inlet cross-sectional areas,

$$\mathrm{AR}_{\mathrm{diff}} = 1 + 4\frac{L_{\mathrm{diff}}}{D_1}(\tan(\alpha)) + \left(\frac{2L_{\mathrm{diff}}}{D_1}(\tan(\alpha))\right)^2 \tag{13}$$

where $\mathrm{AR}_{\mathrm{diff}}$ is the diffuser area ratio, D_1 is the diffuser inlet diameter, L_{diff} is the diffuser length, and α is the diffuser half angle. The diffuser section pressure drop was estimated by the following equation [8]:

$$\Delta P_{\mathrm{diff}} = \lambda(0.5\rho(V_1)^2)\left[1 - \frac{1}{(\mathrm{AR}_{\mathrm{diff}})^2}\right] \tag{14}$$

where λ is the loss coefficient given by 0.45, V_1 is the diffuser inlet velocity, and ρ is the fluid density. For the straight SS pipe

Downloaded 15 Jan 2011 to 129.137.89.240. Redistribution subject to ASME license or copyright; see http://www.asme.org/terms/Terms_Use.cfm

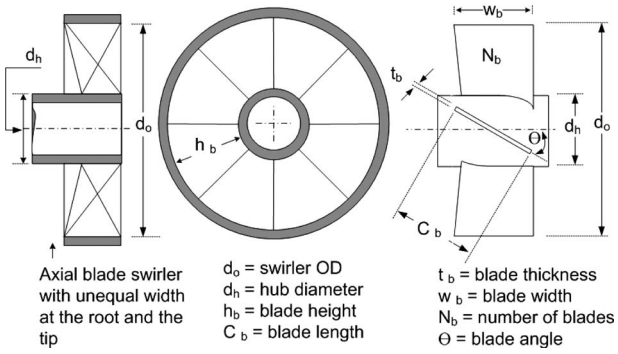

Fig. 6 Axial blade geometry

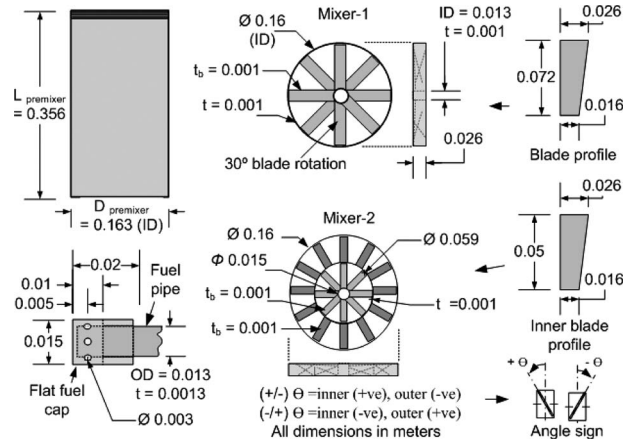

Fig. 7 DB premixer component dimensions

sections, the formulations used during the pressure drop calculations are

$$\Delta P_{\text{pipe}} = \frac{\rho V_{\text{ref}}^2}{2} f_{\text{pipe}} \frac{L_{\text{pipe}}}{D_{\text{ref}}} \tag{15}$$

where f_{pipe} is the friction factor given by

$$f_{\text{pipe}} = \left(1.14 - 2 \times \log\left(\frac{\Psi}{D_{\text{ref}}} + \frac{21.25}{\text{Re}^{0.9}}\right)\right)^{-2} \tag{16}$$

where Ψ is the absolute roughness and Re is the Reynolds number.

4.2.3 Premixer. Swirling flow is the method used in this work to rapidly mix the fuel and the oxidant inside the DB premixer. Swirl can be imparted to the flow by different means [10,11]. In the present work the swirling motion of the flow was imported by utilizing a static mixer.

4.2.3.1 Static mixer (swirler) design. The goal of the static mixer is to impart sufficient swirl to the flow to thoroughly mix the oxidant and the fuel in the premixer prior to combustion while minimizing the pressure losses. The design procedure followed during the swirler design process was based on Ref. [10]: (1) selecting the model for a tangential velocity, (2) determining the swirl strength, which is characterized by the swirl number (S), and (3) developing the swirl vane geometry, which is based on the experimental foundation or other standard rules.

In the present work the axial swirler design of the constant angle model was selected for ease of manufacture. The swirl number is approximated by the ratio of the axial flux of the swirl momentum to the axial flux of the axial momentum times the equivalent nozzle radius [12]. The swirl number was estimated with

$$S = \frac{2}{3} \times \left[\frac{1 - \left(\frac{d_h}{d_o}\right)^3}{1 - \left(\frac{d_h}{d_o}\right)^2}\right] \times \tan(\theta) \tag{17}$$

See Fig. 6 for parameter definitions. The swirl number has a strong impact on recirculation. Little or no axial recirculation occurs below the critical value of 0.6, where the adverse pressure gradient is not enough to cause axial recirculation. Above or equal to this value, a central recirculation zone forms due to the presence of strong radial and axial pressure gradients near the swirler exit [13].

Figure 6 defines all the geometrical design variables for the swirler used. Typical axial swirler designs have blade angles between 30 deg and 70 deg, blade thicknesses between 0.75 mm and 1.5 mm, number of swirler blades between 8 and 16, and blade widths between 0.2 and 0.4 times the outer radius [11,14].

Swirler pressure drop (ΔP_{sw}). Different correlations are available in the literature to estimate the swirler pressure drop (e.g., see Refs. [11,15,16]. The empirical formula used to estimate the pressure drop through the swirl thin blades in this work is given by [16]

$$\Delta P_{\text{sw}} = \rho \frac{V_{\text{ref}}^2}{2}(0.02625\theta^2 - 2.1\theta + 45.5) \quad \text{for} \quad \theta \geq 40 \text{ deg} \tag{18}$$

$$\Delta P_{\text{sw}} = \rho \frac{V_{\text{ref}}^2}{2}(0.0875\theta) \quad \text{for} \quad \theta < 40 \text{ deg} \tag{19}$$

Swirler effective area $A\text{sw}_{\text{eff}}$. The effective area, which was used for the computation of the swirler airflow, is defined as the annulus area or the swirler physical area, corrected for swirl and flow blockages and multiplied by the swirler discharge coefficient (Cd_{sw}) [9],

$$A\text{sw}_{\text{eff}} = Cd_{\text{sw}} \times \left(\frac{\pi}{4}(d_o^2 - d_h^2)\cos(\theta) - N_b t_b h_b\right) \tag{20}$$

For thin axial blades, the discharge coefficient could be assumed to be 1.0 [16]. In an axial blade swirler, the width of the flow passage at the blade root is smaller than that at the blade tip. Therefore to avoid and reduce the resistance to the flow at the root of the blades, the blade root is designed as shown in Figs. 6 and 7 [11].

4.2.3.2 Fuel caps. A simple plain orifice fuel injector was designed for the DB. In this design Bernoulli's principle was used to compute the fuel velocity at the nozzle exit in terms of the fuel flow rate, fuel pressure, fuel temperature, and discharge coefficient. Treating the gaseous fuel as an ideal gas, the equation of state was used to calculate the fuel density. Then the total nozzle area was calculated by using the continuity equation. To provide a more uniform distribution of the fuel inside the DB premixer and to improve the mixing between the fuel and the oxidizer, the total nozzle area was divided into eight small holes [17]. According to the calculated parameters, the fuel pipe diameter was selected, and hence the premixer inner swirler diameter was fixed (hub diameter) (see Fig. 7). Two types of fuel caps were designed for testing: flat and round caps in which fuel is injected at 90 deg and 45 deg to the main flow direction, respectively. The aim of the present fuel injection technique was to inject the fuel radially from the center into the swirl turbulent region to achieve the maximum utilization of the turbulence for fuel oxidant mixing. Fuel caps with hole diameters of 1.8 mm (Cap-1), 2.3 mm (Cap-2), 2.5 mm (Cap-3), and 3 mm (Cap-4) were tested during the LSI phase to study the affect of the different velocity ratios, fuel injection angles, and fuel jet penetration distances on mixing. For the purpose of initiating the design, the maximum penetration distance of round jets was estimated using the following equation [8]:

Downloaded 15 Jan 2011 to 129.137.89.240. Redistribution subject to ASME license or copyright; see http://www.asme.org/terms/Terms_Use.cfm

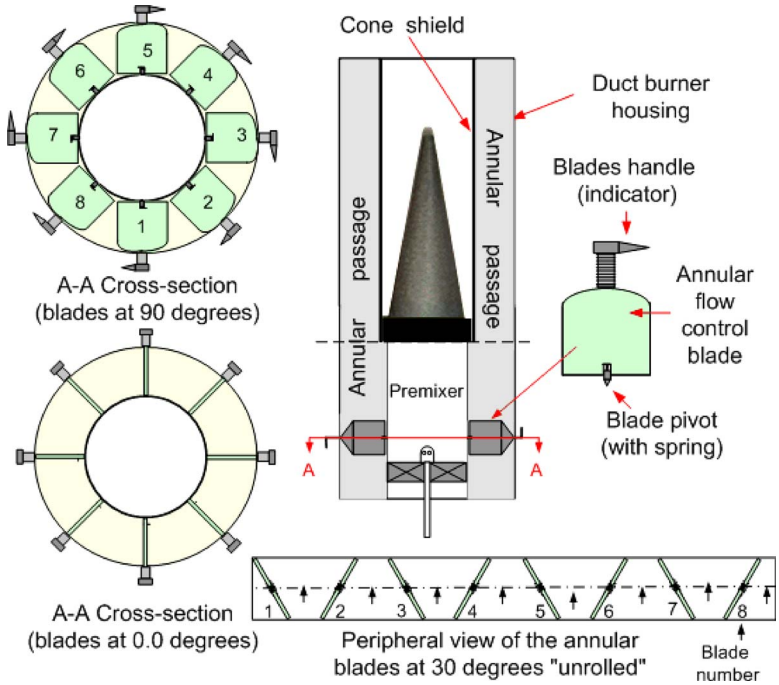

Fig. 8 Schematic of the annular passage and the blade operation

$$Y_{\max} = 1.25 D_{\text{jet}} J^{0.5} \frac{\dot{m}_{\text{flow}}}{\dot{m}_{\text{flow}} + \dot{m}_{\text{jet}}} \tag{21}$$

where D_{jet}, $Y_{\max}$, J, $\dot{m}_{\text{jet}}$, and $\dot{m}_{\text{flow}}$ are, respectively, the round jet diameter, maximum penetration distance, the momentum flux ratio, the jet mass flow rate, and the main cross flow rate.

4.2.3.3 Premixer pipe. The premixer pipe was designed to ensure good mixing at all operating conditions. A SS standard pipe of 0.168 m (6.625 in. pipe Sch-5S) outer diameter was used for the premixer pipe. The size of the premixer pipe was dictated by two parameters: the conical wire-mesh burner dimensions and the best mixing length. The diameter of the premixer pipe was fixed as the conical wire-mesh burner base diameter. The premixer pipe length was selected to be two diameters of the conical wire-mesh burner base diameter to give more mixing time and measurement space (see Fig. 7). The premixer was mounted coaxially in the DB housing by means of two pairs of four supports. One pair was made hollow and used as ports to the temperature measurements made inside the premixer and as support to the cone shield.

4.2.4 Conical Wire-Mesh Burner Design. The results of this design process were the dimensions of the cone template and its pressure drop estimation. The base frame of the conical wire-mesh burner design was based on the following parameters: pressure drop assigned to the conical burner, premixer dimensions, and the required combustion intensity. First the conical mesh burner surface area was computed by dividing the previous calculated heat release (Eq. (11)) by the specified combustion intensity (Table 1). Then, the height of the cone (H_{cone}) was geometrically calculated using the formula

$$H_{\text{cone}} = \sqrt{\left(\frac{\left(\frac{Q}{Q_{\text{in}}}\right)}{0.5\pi D_{\text{cone}}}\right)^2 - \left(\frac{D_{\text{cone}}}{2}\right)^2} \tag{22}$$

where D_{cone} is the cone base diameter, which is equal to the premixer pipe diameter in this case. Correlations from Ref. [18] were used to estimate the pressure drop of the conical burner as a function of the area ratio (open area/total area). The pressure drop estimated was approximately 74.7 Pa (0.3 in. of water). For this value, the results show that the mesh burner must have an area ratio of approximately 95%. The effect of the conical burner pressure drop on the performance of the DB was studied during the combustion test phase of this study. Three conical mesh burners with different nominal pressure drops (Cone-1=74.7 Pa (0.3 in. H_2O), Cone-2=149 Pa (0.6 in. H_2O), and Cone-3=224 Pa (0.9 in. H_2O)) were manufactured and tested. The dimensions and the materials used in the manufacturing of the conical wire-mesh burner were previously reported by Ramadan et al. [1].

4.2.5 Annular Passage. The shaded area shown in Fig. 8 represents the annular passage of the DB, which starts from the leading edge of the premixer and ends at the trailing edge of the cone shield. The length and the width of the annular passage depend on the shield length and diameter used in a particular test. During the conceptual design process of the DB, key assumptions were made in both the combustion and the fluid dynamics calculations. Those assumptions lead to some uncertainty. Therefore, eight flat axial manually adjustable blades were introduced 8 cm downstream from the leading edge of the annular passage to provide flexibility and control for stable combustion over a range of operating conditions. Figure 8 shows an overview of the annular flow control blade (AFCB) operation. The blades adjust the MTEG flow split between the conical wire-mesh and the annular passage to achieve a trade-off between emissions, pressure drop. and flame stability. The open cross section, shown in Fig. 8, indicates the way to operate the AFCB between 0 deg and 90 deg. The AFCB are operated in a way that the MTEG flows in convergent and divergent passages to avoid a generation of swirling flow in the annular region for flow measurement reason.

4.2.6 Mesh Burner Shield (Cone Shield). The function of the cone shield is to provide a calm region to ignite and start the combustion until the flame stabilizes at the surface of the mesh burner, providing a continuous source of ignition for the incoming mixture flowing through the wire-mesh burner. In other words, the cone shield was used at this stage to protect or minimize the interaction of the bypass flow with the mesh burner surface to avoid flame quenching. The conical burner shield in the present work has some similar functions as those of a gas turbine combustor liner. It was reported in the literature that for a conventional

Downloaded 15 Jan 2011 to 129.137.89.240. Redistribution subject to ASME license or copyright; see http://www.asme.org/terms/Terms_Use.cfm

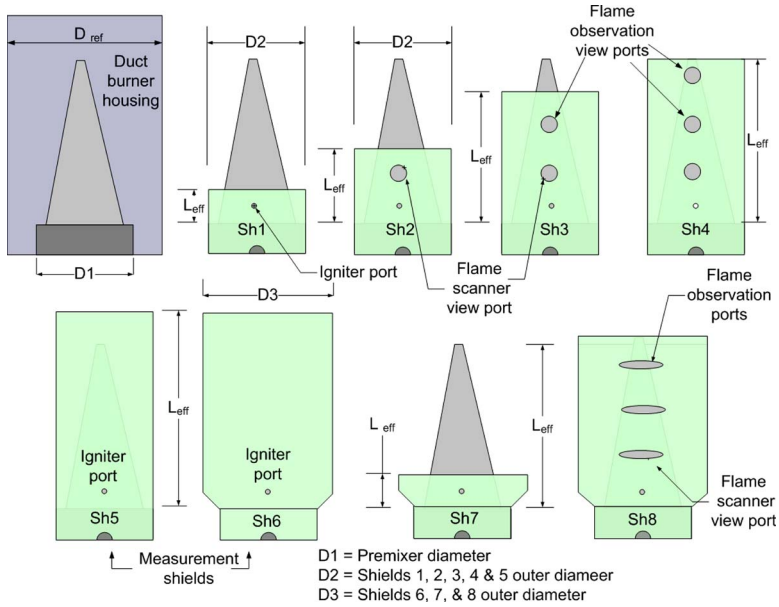

Fig. 9 Schematic of the shields used

combustor, the ratio of the liner cross-sectional area to the combustor reference area should be kept within 60–72% [17], and for a tubular combustor with a constant annulus cross section; the area ratio should be in the range of 50–60% for minimum pressure losses [19]. In the present paper the ratio of the burner shield cross-sectional area to the burner reference area was referred to as the blockage ratio (BR). Based on this ratio, two different shield designs were used in this investigation, with blockage ratio values of 0.4 and 0.6. As the blockage ratio increases, the pressure drop across the DB increases, leading to more MTEG entering the combustion zone. To study the effect of shield parameters on the stability of the flame, different shield designs were tested. Shields covering 25%, 50%, 75%, and 100% of the conical mesh burner length with varying BRs were used, and their effect on flame stability and emission levels (NO_x and CO) was measured. In addition to the mentioned shields, two measurement shields were used to provide a smooth uniform flow for the Pitot-static tube measurements performed prior to the combustion test to check the mass flow split between the DB regions. Figure 9 shows the schematics of all the shields used in the present investigation with their parameters. The holes on the shields were aligned to the visualization ports located at the DB outer housing (Pipe 4). One port was used as an igniter port, and the lower semicircular cut was used for setting the shield on the premixer hollow support.

5 Combustion Results Sample

A series of extensive parametric tests were conducted in which the effect of varying the different geometries (mixers, fuel caps, cones, annular blade angle setting, and shields) and firing rates (FRs) on the NO_x, CO, and flame stability was determined. In previous papers by the present authors [1,2], combustion results were presented for the single-swirl mixer (SM) (30 deg) case only. In this paper sample combustion results from both the SM and the double-swirl mixer (DM) ± 30 deg cases will be provided. A HORIBA model PG-250 portable gas analyzer was used for the concentration measurements. All reported NO_x and CO emission values in this paper were for the DB only (total minus MT) corrected to 15% O_2. The MT NO_x and CO emissions were reported in Ref. [1].

Figure 10 shows the DB operating in a blue flame mode. The flame images are shown, along with the associated fixed burner parameters and resulting emissions. The NO_x emissions as a function of firing rate for different AFCB angles are presented in Fig. 11. The figure shows lines of constant equivalence ratios. As the equivalence ratio decreases, the NO_x emissions decrease (high excess oxidant). While at a given AFCB angle, the NO_x emissions decrease with the firing rate until the lower stability limit was reached (blow-off limit). During the course of testing, the AFCB angle was found to have a greater effect on the DB overall pressure drop than on the conical wire-mesh burner itself. The two limits used to define the operating range are the blow-off limit and the high NO_x limit (<10 ppm).

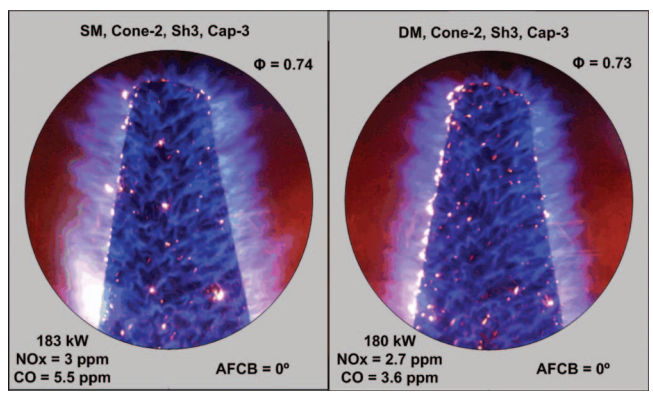

Fig. 10 DB operating in a blue flame mode (SM, left; DM, right)

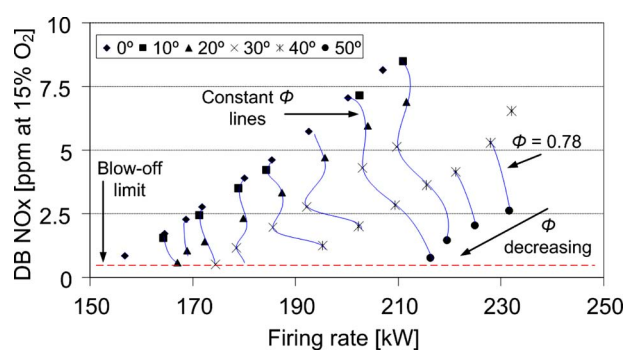

Fig. 11 Effect of AFCB angles and FR on NO_x emission (SM, Sh2, Cap-2, and Cone-3)

Downloaded 15 Jan 2011 to 129.137.89.240. Redistribution subject to ASME license or copyright; see http://www.asme.org/terms/Terms_Use.cfm

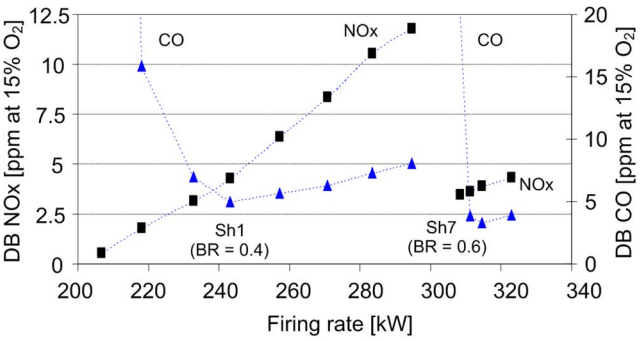

Fig. 12 Effect of BR and FR on NO_x and CO emissions (SM, Cap-4, Cone-3, and AFCB=0 deg)

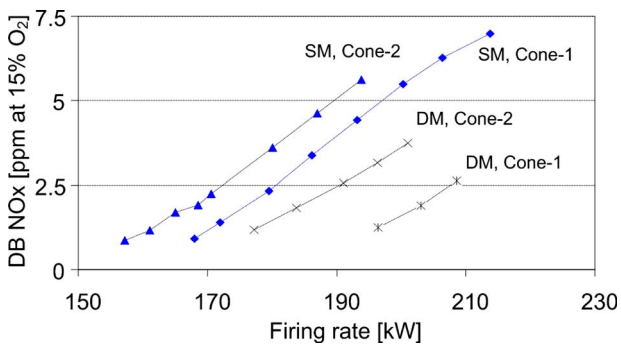

Fig. 13 Effect of different mixer-cone combinations as a function of FR on NO_x emission (Sh2, Cap-2, and AFCB=0 deg)

The NO_x and CO emission results as a function of firing rate for different BRs are presented in Fig. 12. The figure shows that as the BR increases to 0.6 (Sh7), the lower emission values were obtained at higher firing rates. The test results also show that the DB operating range is wider with low BR shields. The figure also shows that the CO emissions become excessive at very low firing rates due to incomplete combustion near the blow-off limit. The lower CO (<5 ppm) and NO_x (<5 ppm) emissions at FR in the range of 250–330 kW were recorded when the DB used Sh7 and Sh8 (BR=0.6), Cap-4, a SM, and both Cone-2 and Cone-3.

Figure 13 shows the effect of four different geometrical combinations on the stability range and NO_x emission levels. The figure shows that for a constant firing rate and a fixed AFCB angle (0 deg), the NO_x emissions decrease as the conical mesh burner pressure drop decreases (higher porosity Cone-1 allows more excess oxidant to flow through the combustion zone, thus reducing NO_x). Also at a fixed AFCB angle, the higher conical pressure drop burner extends the lower firing rate range. Hence the operating zone becomes wider (lower porosity Cone-2 increases the local exhaust gas momentum). Using DM shows (Fig. 13) lower NO_x emission due to the better premixing between the oxidant and the fuel. The lower strength mixer, SM, extends the lower firing rate range. Hence the operating zone becomes wider, and the flame stabilizes at leaner fuel/oxidant mixture ratios. Returning to Fig. 10, we can see the effect of using different mixers on the flame structure. The figure shows that the DM provides a better overall flame height uniformity compared with SM.

6 Conclusion

The procedures discussed in this paper form a methodology for the preliminary design of a conical wire-mesh DB. The combustion results proved that the design procedures that were used to design this novel MT wire-mesh DB were successful. This DB was verified to operate in the blue flame mode stably with ultralow concentration of pollutants. Sample combustion results were presented, and flame images showing the DB operating in a blue flame mode were provided.

During the course of the evaluation tests, the DB displayed a stable low emission operation throughout the surface firing rate range of 148–328 kW (1574–3489 kW/m^2). Emissions of less than 5 ppm for both NO_x and CO emissions were recorded, while the DB successfully raised the MTEGT from about 230°C to as high as 700°C. The DB overall pressure drop throughout all the conducted tests was below the design point of 249 Pa. (1 in. H_2O).

Acknowledgment

This study was supported by the CANMET Energy Technology Centre, Ottawa, ON, Canada.

Nomenclature

IR = Ingersoll Rand
LHV = lower heating value
LP = lean premixed
MW = molecular weight

References

[1] Ramadan, O. B., Gauthier, J. E. D., Hughes, P. M., and Brandon, R., 2007, "Experimental Investigation and Evaluation of a Low NO_x Natural Gas-Fired Mesh Duct Burner," ASME Paper No. GT2007-28350.
[2] Ramadan, O. B., Gauthier, J. E. D., Hughes, P. M., and Brandon, R., 2007, "Testing of a Low NO_x Wire-Mesh Duct Burner for Micro-Cogeneration Unit," CANCAM-2007, Toronto, Canada, June 3–7.
[3] Chase, M. W., 1998, *JANNAF Thermochemical Tables*, 3rd ed., American Chemical Society, American Institute of Physics, and National Bureau of Standards, Woodbury, NY, Vol. 14, Pts. I and II.
[4] Kuo, K. K., 2005, *Principles of Combustion*, 2nd ed., Wiley, New York.
[5] Bathie, W., 1996, *Fundamentals of Gas Turbines*, 2nd ed., Wiley, New York.
[6] Gauthier, J. E. D., Bardon, M. F., and Rao, V. K., 1996, "General Flame-Propagation Model for Fuel droplet, Particle and Vapour Mixtures in Air," J. Inst. Energy, **69**, pp. 59–67.
[7] Turns, S. R., 2000, *An Introduction to Combustion: Concepts and Applications*, 2nd ed., McGraw-Hill, New York.
[8] Lefebvre, A. H., 1999, *Gas Turbine Combustion*, 2nd ed., Taylor & Francis, London.
[9] Mellor, A. M., 1990, *Design of Modern Turbine Combustor*, Academic, New York.
[10] Gupta, A. K., Lilley, D. G., and Syred, N., 1984, *Swirl Flows*, Abacus, London.
[11] Basu, P., Kefa, C., and Jestin, L., 1999, *Boilers and Burners Design and Theory*, Springer, New York.
[12] Beer, J. M., and Chigier, N. A., 1972, *Combustion Aerodynamics*, Applied Science, London.
[13] Lilley, D. G., 1977, "Swirl Flows in Combustion: A Review," AIAA J., **15**(8), pp. 1063–1078.
[14] Dodds, W. J., and Bahr, D. W., 1990, *Combustion System Design*, Academic, New York.
[15] Mathur, M. L., and Maccallum, N. R. L., 1967, "Swirling Air Jets Issuing From Vane Swirlers, Part 2: Enclosed Jets," J. Inst. Fuel, **40**, pp. 238–245.
[16] Baukal, C. E., Jr., Gershtein, V., and Jimmyli, X., 2000, *Computational Fluid Dynamics in Industrial Combustion*, CRC Press, Boca Raton, FL.
[17] Sawyer, J. W., 1985, *Sawyer's Gas Turbine Engineering Handbook*, 3rd ed., Turbomachinery International, Norwalk, CT.
[18] Blevins, R. D., 1984, *Applied Fluid Dynamics Handbook*, Van Nostrand Reinhold, New York.
[19] Grobman, J. S., Dittrich, R. T., and Gravs, C. C., 1957, "Pressure Drop and Air Flow Distribution in Gas Turbine Combustors," Trans. ASME, **79**, pp. 1601–1607.

Downloaded 15 Jan 2011 to 129.137.89.240. Redistribution subject to ASME license or copyright; see http://www.asme.org/terms/Terms_Use.cfm