Twenty-Seventh Symposium (International) on Combustion/The Combustion Institute, 1998/pp. 1229–1237

EFFECTS OF FUEL-AIR MIXING ON FLAME STRUCTURES AND NO_x EMISSIONS IN SWIRLING METHANE JET FLAMES

T. S. CHENG,[1] Y.-C. CHAO,[2] D.-C. WU,[2] T. YUAN,[2] C.-C. LU,[2] C.-K. CHENG[2] AND J.-M. CHANG[2]

[1]*Department of Mechanical Engineering*
Chung Hua University
Hsinchu, Taiwan, 300, ROC
[2]*Institute of Aeronautics and Astronautics*
National Cheng Kung University
Tainan, Taiwan, 701, ROC

An experimental investigation is performed to study the effects of initial fuel-air mixing on NO_x and CO emissions in swirling methane jet flames. The major parameters used to modify the initial fuel-air mixing ahead of the swirling flame are the swirl number, the fuel-air momentum flux ratio, and the fuel injection location. Two characteristic swirling combustion modes, the fuel jet-dominated (type-1) and the strongly recirculating (type-2) flames, are identified from flame visualization and 2-D laser-induced predissociative fluorescence imaging of OH by varying the fuel-air momentum flux ratio. Laser Doppler velocimetry (LDV) measurements show that the shear layer between the edge of the swirling recirculation zone and the external flow is a highly turbulent and rapid mixing region. The maximum mean flame temperature is located at the edge of the recirculation zone, indicating violent combustion and strong mixing of fuel, air, and hot products in this region. Strong and rapid mixing of the strongly recirculating flame, which increases mixture homogeneity and shortens the characteristic time for NO_x formation, results in a lower NO_x emission index than that in the fuel jet-dominated flame. Excess cold air entrained by the swirling flow may quench the combustion and the hot products, resulting in an increase of CO emission, indicating poor combustion efficiency. By modifying the fuel injection pattern with the annular fuel injector, which changes the fuel-air mixing pattern and properly smooths the rapid mixing leading to a higher flame temperature, the NO_x emission level can further be reduced with a significant decrease in CO emission.

Introduction

Swirling flows are widely used in industrial burners in order to increase fuel-air mixing and to improve flame stabilization. As swirl is introduced in the flow, the tangential component of the swirling flow enhances the turbulent mixing of fuel and air, and the swirl-induced recirculation stabilizes the flame. In general, if the swirl strength is strong enough, characterized by the nondimensional swirl number S, an internal recirculation zone can be established that serves as a reservoir of heat and chemical radicals. The existence and shape of this zone strongly influence the flame stability. Chigier et al. [1] showed that the addition of swirl does increase the blow-off velocity by more than a factor of 7 relative to an unswirled flame. The effects of heat release, rapid mixing due to swirl, and coaxial air velocities on swirling flame characteristics have been extensively studied by Driscoll and coworkers [2–6].

For strongly recirculating flows, the oscillation of the forward stagnation point of the recirculation zone causes unsteady motion of the swirling flame as shown by many researchers [7–11]. The formation of NO_x is known to strongly relate to the combustion temperature and the mixing level of cold fresh combustible mixture with hot gas product, especially for the non-premixed flame in which the fluid mechanics may play an important role. Claypole and Syred [12] and Chen and Driscoll [13] found that the swirl effect can significantly decrease the NO_x emission relative to the simple jet flame. Although the swirling flows have been extensively used in combustor design, the relation between the combustion characteristics of swirling flames and pollutant emissions still needs to be established. The recent laser measurements in swirling hydrogen diffusion flames showed that swirl-induced rapid mixing results in finite-rate chemistry effects that reduce flame temperature well below the adiabatic equilibrium value at the upstream end of the recirculation zone [14,15]. Swirl strongly affects the fuel-air mixing and combustion process at the upstream end of the recirculation zone where the flame stabilizes. Both effects have a strong influence on stabilization of the swirl flame and its characteristics of pollutant emissions. This fact indicates that the initial fuel-air mixing ahead of the swirl flame is an important factor to flame stabilization and pollutant formation [16].

Because swirling flow induces high turbulence and

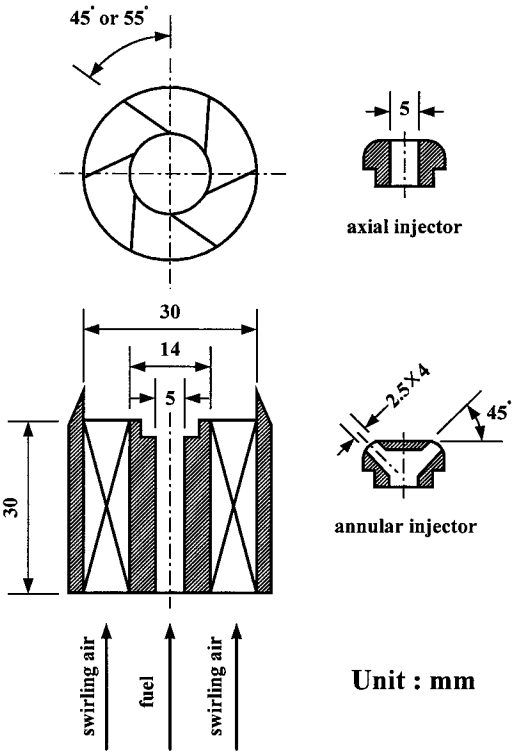

FIG. 1. Schematic diagram of the swirl burner.

rapid mixing, proper manipulation of the initial fuel-air mixing by modifying the swirl strength, the fuel and swirl-air momentum flux ratio ($MR = \rho_F U_F^2/\rho_A U_A^2$), and the fuel injector will be beneficial in controlling the flame stability and pollutant emissions. In the present experimental study, a laboratory scale of swirl burner is used to investigate the characteristics of the initial fuel-air mixing of the swirling flame and their effects on flame structures and pollutant emissions. Laser Doppler velocimetry (LDV) is used to determine the properties of the flow fields. Two-dimensional detection by planar laser-induced fluorescence (PLIF) is used to obtain the spatial structure of the OH and NO.

Experimental Apparatus

The swirl burner is schematically shown in Fig. 1. The swirling component is generated by the swirler with six guide vanes at the angle of 45° or 55°, which is placed coaxially with the central fuel tube. The corresponding geometrical swirl number, defined following the literature [17] as

$$S = \frac{2}{3}\left[\frac{1 - (R_h / R)^3}{1 - (R_h / R)^2}\right] \tan \alpha \qquad (1)$$

is calculated from the hub radius R_h, the swirler radius R, and the angle of guide vanes α to be 0.7 and 1.0, respectively. Methane is supplied from an axial injector with 5-mm inner diameter or from an annular injector with four 2.5-mm holes inclined by 45° to investigate the effect of fuel injection. An R-type (Pt/Pt-13Rh) thermocouple with 125 μm in diameter is used to measure the temperature. BeO and 10–15% Y_2O_3 coating is applied to eliminate catalytic reaction of platinum in flame. The maximum radiation loss is calculated to be 5% of the measured temperature, and it is applied to the thermocouple measurements. The gas analyzers are used to detect the combustion products. The analyzer system is calibrated with standard span gases of 20 ppm NO in N_2 and 250 ppm CO. The accuracy of the gas analyzer is 4% for NO and CO measurements. A stainless steel sampling probe that located more than two flame lengths downstream from the jet exit is used to measure the postflame emission levels, as suggested by Drake et al. [18]. The emission indices, EINOx and EICO, as suggested by Turns and Lovett [19], are used here to correct the measured emission data of NO_x and CO.

The experimental setup of the LDV and PLIF systems is shown in Fig. 2. The LDV used for velocity measurements is based on a two-color, four-beam system working in the backward-scattering mode. We measure u and v components first and then rotate two components for measuring u and w. Al_2O_3 seeding particles (nominal diameter 1 μm) are provided to both the fuel jet and air annulus. The maximum error is estimated to be 10% for the longitudinal and 20% for the lateral velocity measurements, which is comparable to other LDV measurements in swirling flames [15]. Details of the LDV system has been described previously [20].

For 2-D laser-induced predissociative fluorescence imaging of OH [21], a narrowband tunable KrF excimer laser is used to excite the $P_2(8)$ rotational line of the A–X (3,0) transition at $\lambda = 248.46$ nm. The laser beam is formed to a thin sheet of 25 mm height and 0.2 mm thick by a single cylindrical lens ($f = 1000$ mm) and intersected the flame axis vertically. The OH fluorescence signal is imaged onto an intensified charge-coupled device (CCD) camera (576 × 384 pixels) with an UV camera lens (Nikkor, $f = 105$ mm, f/4.5). A 10-mm-thick butyl acetate liquid filter is placed in front of the camera to reject the Rayleigh light. Although the Stokes–Raman signals may also enter into the camera, the influence of the Raman signal on OH fluorescence signal is small due to high fluorescence/Raman signal ratio (~1000/1).

For PLIF NO imaging [22,23], a broadband XeCl excimer laser is used to pump a narrowband dye laser coupled with a frequency doubler. The dye laser is tunable from 225 to 227 nm with a nominal bandwidth of 0.04 cm^{-1}. Again, the laser beam is formed

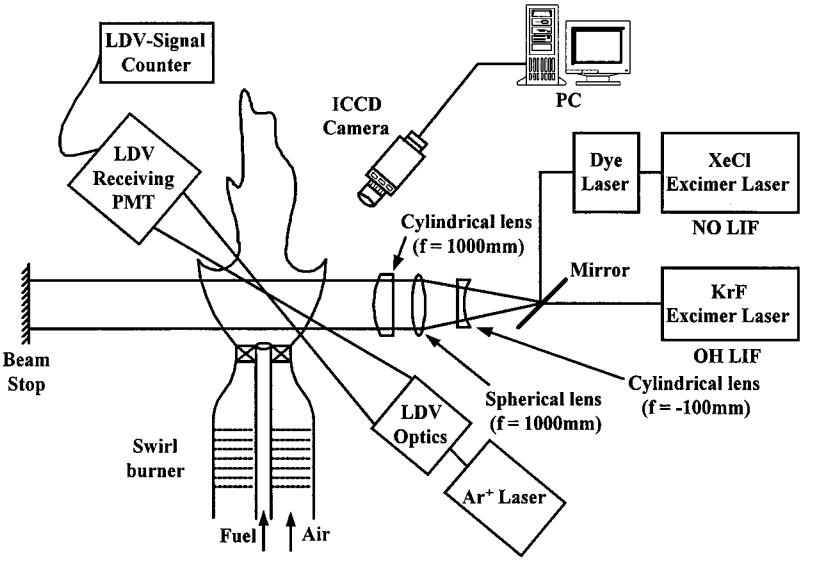

FIG. 2. Experimental setup of the LDV and PLIF systems.

to a sheet with a combination of a spherical lens ($f = 1000$ mm) and a cylindrical lens ($f = -100$ mm). The laser is tuned to excite $Q_{11}(18.5)$ rotational line of the A–X (0,0) band at $\lambda = 225.86$ nm. The fluorescence signal in the spectral region of the γ (0,1) band (~236 nm) is imaged onto the camera. An UV camera interference band-pass filter with a center transmission of 239 nm and a half-width of 20 nm is used to reduce scattered 225.86-nm light.

Results and Discussion

Flame Visualization and Combustion Modes

Photographs of the swirling methane jet flames with $S = 1.0$ for three different momentum flux ratios ($MR = 1.50$, 0.67, and 0.14) and two different fuel injectors (axial and annular) are compared in Fig. 3. As swirl is introduced and the momentum flux ratio is high ($MR = 1.50$), a bubblelike recirculation zone appears at the flame base as shown in Fig. 3a. The flame is long, yellow in color, quiet, and highly luminous, indicating improper mixing and poor combustion as evidenced by soot accumulation on the surface of the fuel injector. However, the flame length is a little bit shorter than the unswirled jet diffusion flame. This type of flame can be classified as the fully penetrated jetlike, or fuel jet-dominated flame (type-1 flame). When the flow rate of the swirling air is increased ($MR = 0.67$), the flame becomes shorter as shown in Fig. 3b. The central fuel jet appears to penetrate the recirculation zone from time to time and causes violent flame oscillation. This can be classified as the partially penetrated jetlike flame. As the flow rate of the swirling air is further increased ($MR = 0.14$, as shown in Fig. 3c), the flame length is shortened by a factor of 5 from that in Fig. 3a. The flame is blue in color, indicating high and compact temperature distribution, and the flame is noisy resulting from the violent interaction of central jet and recirculation vortex at the location of the forward stagnation point. Neither further reduction in flame length nor change in shape can be achieved by further increasing the swirling air flow rate. This type of flame can be classified as the strongly recirculating flame (type-2 flame). Similar trends are found for $S = 0.7$ flames.

The effects of the annular fuel injector are shown in Figs. 3d–3f. For $MR = 1.50$ and 0.67 flames, the appearances of the flames are different from the axial-injection flames. These flames are shorter and broader without an obvious central jet flame. For $MR = 0.14$, the appearance is similar to the axial-injection one. However, the flame structure is totally different (shown later in OH image). It should be noted that because the fuel jets are inclined in direction, there is no forward stagnation point, and the recirculation vortex stabilizes closer to the fuel injector.

Velocity and Temperature Distributions

Velocity and temperature measurements are made in the radial direction at several axial locations for each swirl number, momentum flux ratio, and fuel injector. In this paper, due to space limitation, we only present the results of $S = 1.0$ with both axial and annular fuel injections. The oscillation of the swirling flame is quite periodic, and the frequency

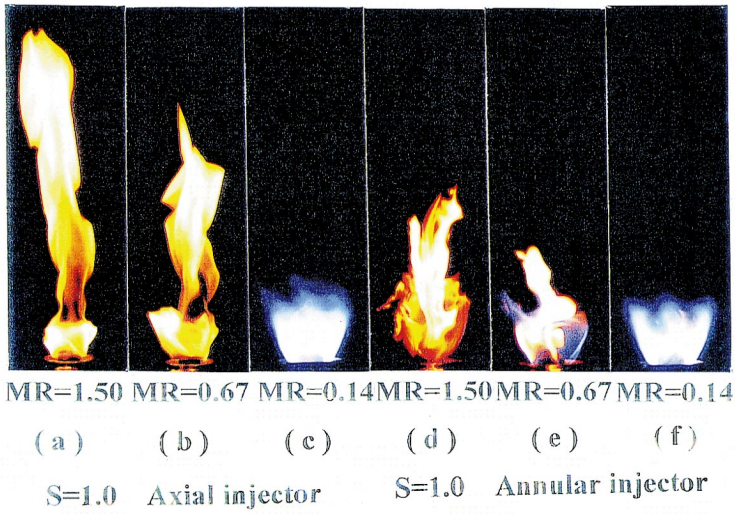

FIG. 3. Photographs of the swirling methane jet flames.

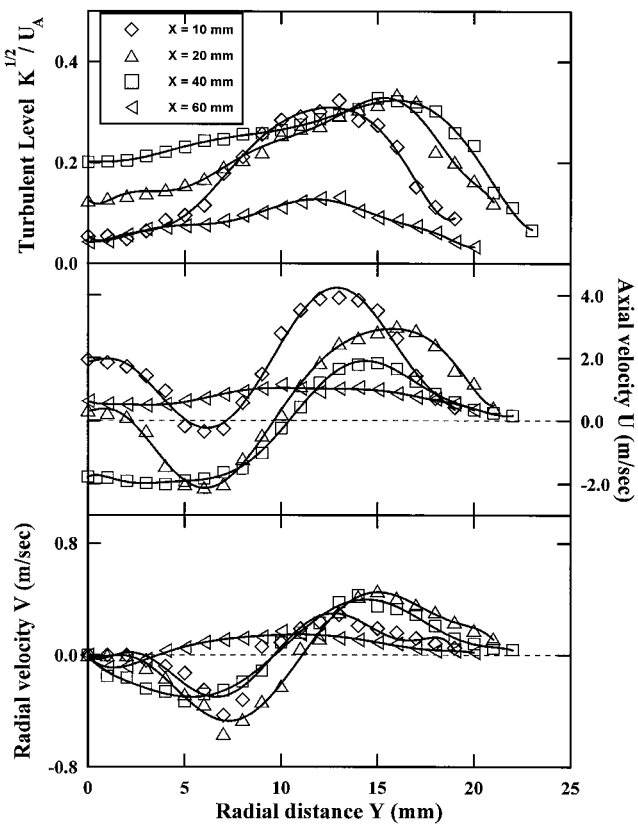

FIG. 4. Radial profiles of normalized turbulent kinetic energy and mean axial and radial velocities for the strongly recirculating flames ($S = 1.0$, $MR = 0.14$) with axial fuel injection. Turbulent kinetic energy $K = (\overline{u'^2} + \overline{v'^2} + \overline{w'^2})^{1/2}$. U_A is the calculated swirling air exit velocity based on the flow rate and exit diameter.

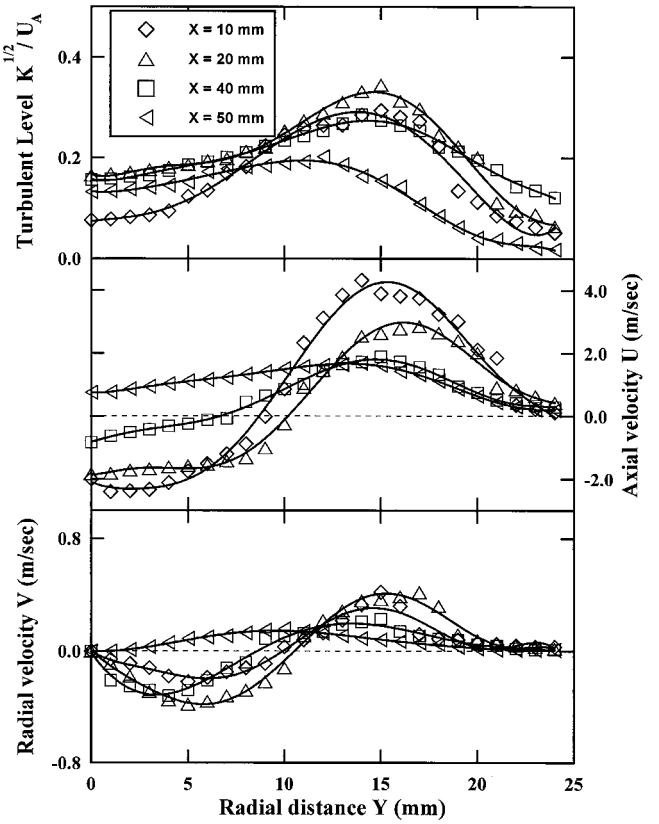

FIG. 5. Radial profiles of normalized turbulent kinetic energy and mean axial and radial velocities for the strongly recirculating flames ($S = 1.0, MR = 0.14$) with annular fuel injection. Turbulent kinetic energy $K = (\overline{u'^2} + \overline{v'^2} + \overline{w'^2})^{1/2}$. U_A is the calculated swirling air exit velocity based on the flow rate and exit diameter.

of each flame is below 60 Hz. Thus, the operating frequencies of the LDV system (40 MHz) and the thermocouple (200 kHz) are adequate for the measurements. The radial profiles of normalized turbulent kinetic energy and mean axial and radial velocities at four axial locations ($X = 10$, 20, 40, and 60 mm) for the strongly recirculating flame ($MR = 0.14$) with axial fuel injection are shown in Fig. 4. The radial profiles of velocity at $X = 30$ and 50 mm have been omitted for clarity. The centerline axial velocity is still positive at $X = 10$ mm and becomes zero around $X = 20$ mm, which is the location of the forward stagnation point. The length of the recirculation zone extends from $X = 20$ mm to near $X = 60$ mm, and the lateral boundary of the recirculation zone is located near $Y = 15$ mm where maximum radial velocity occurs. The normalized maximum turbulent kinetic energy distributes near the edge of the recirculation zone, indicating strong turbulent mixing at this location. The level of the normalized turbulent kinetic energy along the centerline is strongly related to the fluctuation of the forward stagnation point and the oscillation of the recirculation zone. For the case with the annular fuel injector, as shown in Fig. 5, the recirculation zone moves upstream very close to the fuel nozzle and extends to near $X = 45$ mm because there is no direct head-on impingement of the central jet. Again, the maximum axial, radial velocity, and turbulent kinetic energy distribute near the edge of the recirculation zone at around $Y = 15$ mm. The mixing trend of the case with the annular injector is that the fuel stream is directly injected into the edge of the recirculation zone where maximum kinetic energy occurs.

The temperature distributions at $X = 10$, 20, 30, and 40 mm for the strongly recirculating flames ($S = 1.0$ and $MR = 0.14$) with axial and annular injectors are shown in Fig. 6. The radial profiles of temperature at $X = 5$, 15, 25, and 35 mm have been omitted for clarity. For the axial injection case (Fig. 6a), the maximum mean flame temperature determined from the radial profiles increases from $X = 10$ mm to $X = 30$ mm and decreases thereafter to the flame tip. The centerline temperature is low, and the radial peak temperature is located at around $Y = 15$ mm. Corresponding mean temperature profiles for the annular injection case are shown in Fig. 6b. In contrast to the axial fuel injection case, the maximum mean flame temperature decreases from $X = 10$ mm toward downstream. With identical swirl number and momentum ratio, the recirculation

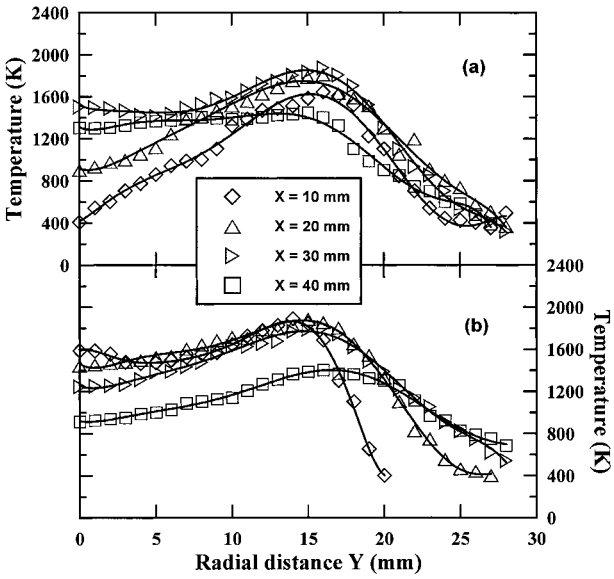

FIG. 6. Radial profiles of mean temperature for the strongly recirculating flames ($S = 1.0$, $MR = 0.14$) with (*a*) axial and (*b*) annular fuel injections.

strength is basically the same. However, the different flame-temperature distribution lies in the different mixing histories due to different fuel injection types. The temperature gradient is steeper near the edge of the recirculation zone revealing that combustion is intensive and the flame is thin. The higher temperature in the centerline is due to the recirculated hot product.

NO_x and CO Emissions

Effects of initial fuel-air mixing ahead of the swirling flame on the NO_x and CO emissions are examined by varying the swirl number, the momentum flux ratio, and the fuel injection as shown in Fig. 7. Figure 7a clearly shows that strong swirl, low momentum flux ratio, and annular injection reduce the NO_x emissions. The strong swirl and low momentum flux ratio cause strong and rapid mixing of the flame, which increase mixture homogeneity and shorten the characteristic time for NO_x formation and result in a lower NO_x emission index. With annular fuel injection in high swirl number and high *MR* flame ($S = 1.0$, $MR = 1.50$), the NO_x emissions can be greatly reduced to as high as 63% compared to the low swirl number ($S = 0.7$) with axial fuel injection flame. A low value of 0.2 g/kg fuel NO_x emission index is obtained in $S = 1.0$ and $MR = 0.14$ flame with annular fuel injection, which is lower than a previously reported value of 0.5 g/kg fuel [16]. The results demonstrate that the annular fuel injection is useful for further NO_x reduction in swirling jet flames.

For CO emission, a completely opposite trend is found. Figure 7b shows that the CO emissions increase with increasing swirl number and swirling air flow rate. In low MR flames ($MR = 0.14$), the flame length is short compared to high *MR* flames. The higher CO emissions in these flames are both due to excess cold air mixed strongly with the combustion hot products and to a lack of locations with medium high temperature for CO to convert to CO_2. However, the CO emissions in these flames can be effectively reduced with annular fuel injection.

OH and NO Imaging

The single-pulse images of OH corresponding to Fig. 3 ($S = 1.0$) are shown in Fig. 8. Each image is taken at 2 mm above the burner exit to reduce Mie

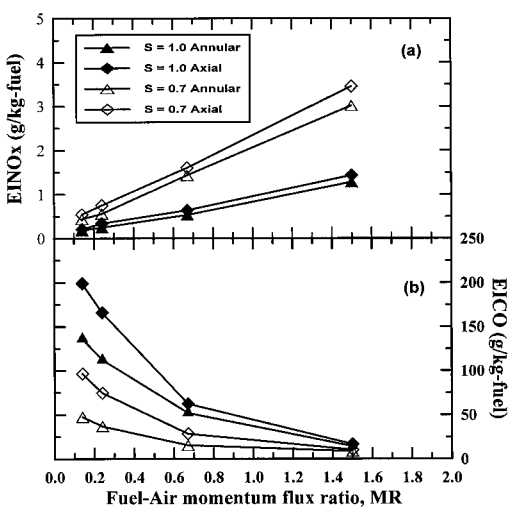

FIG. 7. Effects of swirl number, momentum flux ratio, and fuel injection on the (*a*) NO_x and (*b*) CO emissions.

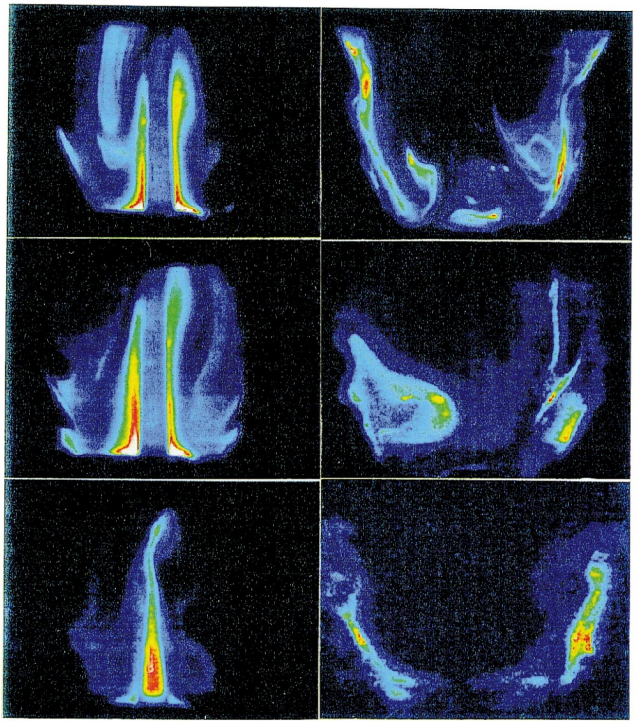

FIG. 8. Single-pulse images of OH in $S = 1.0$ flames. *Left column:* axial injection. *Right column:* annular injection. As previously noted: $MR = 1.50, 0.67, 0.14$. All images show the same axial region, extending from 2 to 27 mm. The flow is upward and the object size is 32 × 43 mm. Intensity range, low → high: blue → green → yellow → red → white.

scattering from the burner surface. Because the OH intensity reaches a maximum value in the flame front, the measured two-dimensional imaging of OH indicates the instantaneous shape of the reaction zone. For the axial injection case, the higher OH fluorescence intensity occurs at the mixing layer between the fuel jet and the recirculation zone in the fuel jet-dominated flames. However, the higher OH intensity is formed at the center near the burner exit in the strongly recirculating flame. These OH images demonstrate how the reaction zone is changed with increasing swirling air in the axial injection case. It is noted that the end of reaction zone ($X = 25$ mm) measured by OH imaging confirms the velocity measurement, which is the location of the forward stagnation point. With the annular injector, the flame structure is totally different from that with the axial injector. The single-shot OH images corresponding to different momentum flux ratios are shown in the right column of Fig. 8. Because there is no head-on impingement of the central jet, the flame is in bowl shape. The maximum OH fluorescence intensity occurs at the edge of the recirculation zone where most reactions take place. Flame extinctions are observed in these flames.

The fluorescence distributions from the combustion-generated NO corresponding to the conditions for OH imaging measurements are also made with PLIF technique. Because the NO fluorescence signals are extremely low compared to the OH signals, the images of NO are not shown in the paper. However, the measured NO signals in the higher momentum flux ratio flames confirm the NO_x emission measurements and reflect roughly the temperature distribution. For the strongly recirculating flames, the NO fluorescence is not detectable. This is mainly due to the low NO formed in these flames. The other possible reason may be that single rotational line $Q_{11}(18.5)$ excitation is used in our measurements compared with the two line $Q_{11}(23.5) + P_{11}(31.5)$ excitation used by other researchers [23].

Conclusions

The effects of initial fuel-air mixing characteristics on NO_x and CO emissions in swirling methane jet flame are experimentally studied by varying the swirl number, the fuel-air momentum flux ratio, and the fuel injection. Two characteristic swirl combustion modes, the fuel jet-dominated (type 1) and the strongly recirculating (type 2) flames are identified by varying the momentum flux ratio. For the type-2 flame with axial fuel injection, the maximum mean flame temperature is located at the edge of the recirculation zone, where the turbulent intensity is also maximum, indicating violent combustion and strong mixing of fuel, air, and hot products in this region. Strong and rapid mixing of this flame, which increases mixture homogeneity and shortens the characteristic time for NO_x formation, results in a lower

NO_x emission index than the fuel jet-dominated flame. This is confirmed by the direct 2-D LIF imaging of OH and NO in flames. However, the type-2 flame produces higher CO emission both due to excess cold air mixed strongly with the combustion hot products and to a lack of locations with medium high temperature for CO to convert to CO_2. The annular fuel injector, which changes the fuel-air mixing pattern and properly smooths the rapid mixing, enhances the combustion process leading to a higher flame temperature. Therefore, the NO_x emission level can further be reduced with significant decrease in CO emission. From thermocouple temperature and PLIF OH and NO measurements, we speculate on that the NO_x formation in these swirling flames are possibly due to prompt NO mechanism. However, this needs more quantitative data such as temporally and spatially resolved mixture fraction, temperature, and major and minor species concentrations for assessment. Line-Raman and LIF measurements are in progress to obtain the quantitative data.

Acknowledgments

This research was supported by the National Science Council of the Republic of China under Grant Numbers NSC86-2212-E-216-001 (TSC), NSC86-2212-E006-025 (YCC), and NSC86-2212-E006-086 (TY). The financial supports are gratefully acknowledged.

REFERENCES

1. Chigier, N. A., Beér, J. M., Grecov, D., and Bassindale, K., *Combust. Flame* 14:171–180 (1970).
2. Driscoll, J. F., Chen, R. H., and Yoon, Y., *Combust. Flame* 88:37–49 (1992).
3. Tangirala, V., Chen, R. H., and Driscoll, J. F., *Combust. Sci. Technol.* 51:75–95 (1987).
4. Tangirala, V. and Driscoll, J. F., *Combust. Sci. Technol.* 60:143–162 (1988).
5. Chen, R. H. and Driscoll, J. F., in *Twenty-Second Symposium (International) on Combustion,* The Combustion Institute, Pittsburgh, 1988, pp. 531–540.
6. Feikema, D., Chen, R. H., and Driscoll, J. F., *Combust. Flame* 86:347–358 (1991).
7. Chanaud, R. C., *J. Fluid Mech.* 22:111–127 (1965).
8. Syred, N. and Beér, J. M., *Combust. Flame* 23:143–201 (1974).
9. Garg, A. K. and Leibovich, S., *Phys. Fluid* 22:2053–2063 (1979).
10. Gouldin, F. C., Halthore, R. N., and Vu, B. T., in *Twentieth Symposium (International) on Combustion,* The Combustion Institute, Pittsburgh, 1984, pp. 269–276.
11. Chao, Y. C., Leu, J. H., Hung, Y. F., and Lin, C. K., *Exp. Fluids* 10:341–348 (1991).
12. Claypole, T. C. and Syred, N., in *Eighteenth Symposium (International) on Combustion,* The Combustion Institute, Pittsburgh, 1981, pp. 81–89.
13. Chen, R. H. and Driscoll, J. F., in *Twenty-Third Symposium (International) on Combustion,* The Combustion Institute, Pittsburgh, 1990, pp. 281–288.
14. Tacke, M. M., Cheng, T. C., Hassel, E. P., and Janicka, J., in *Twenty-Sixth Symposium (International) on Combustion,* The Combustion Institute, Pittsburgh, 1996, pp. 169–175.
15. Früchtel, G., Hassel, E. P., and Janicka, J., in *Twenty-Sixth Symposium (International) on Combustion,* The Combustion Institute, Pittsburgh, 1996, pp. 195–202.
16. Terasaki, T. and Hayashi, S., in *Twenty-Sixth Symposium (International) on Combustion,* The Combustion Institute, Pittsburgh, 1996, pp. 2733–2739.
17. Beér, J. M. and Chigier, N. A., in *Combustion Aerodynamics,* 1st ed., Robert E. Krieger Publishing Company, Malabar, FL, 1983, p. 112.
18. Drake, M. C., Correa, S. M., Pitz, R. W., Shyy, W., and Fenimore, C. P., *Combust. Flame* 69:347–365 (1987).
19. Turns, S. R. and Lovett, J. A., *Combust. Sci. Technol.* 66:233–249 (1989).
20. Chao, Y. C. and Jeng, M. S., in *Twenty-Fourth Symposium (International) on Combustion,* The Combustion Institute, Pittsburgh, 1992, pp. 333–340.
21. Andresen, P., Meijer, G., Schlüter, H., Voges, H., Koch, A., Hentschel, W., Oppermann, W., and Rothe, E., *Appl. Opt.* 29:2392–2404 (1990).
22. Hanson, R. K. and Seitzman, J. M., in *Instrumentation for Flows with Combustion* (A. M. P. K. Taylor, ed.), Academic, London, 1993.
23. Bergmann, V., Meier, W., Wolff, D., and Stricker, W., *Appl. Phys. B* 66:489–502 (1998).

COMMENTS

Ruey-Hung Chen, University of Central Florida, USA. Your Fig. 7 shows that $EINO_x$ increases with momentum ratio. A recent study of NO_x emission from swirl-stabilizied non-premixed flames indicated similar results [1]. In that study, as the fuel flow rate is increased, while keeping swirl number and Reynolds number fixed, the flame becomes jetlike, where the long residence time associated with the flame downstream of the recirculation zone. Therefore, $EINO_x$ increases with the fuel flow rate (or overall equivalence ratio). Also reported were studies of the roles of surrounding air and recirculation zone time scale on NO_x.

REFERENCE

1. Chen, R.-H., *Combust Sci. Technol.* 110–111:443–460 (1995).

Author's Reply. Thanks for the comment. In our study, we vary the swirling airflow rate, while keeping fuel flow rate fixed. Both results, by varying either fuel flow rate or swirling airflow rate, show that the $EINO_x$ increases with MR (momentum ratio).