Aeronautics Days 2006
Vienna/ Austria, 19 – 21 June 2006

LOw POllutant COmbustor TEchnology Project

Project funded by the European Community
under the 'Competitive and Sustainable Growth' Programme (1998-2002) or 5th FP
Aeronautics and Space Priority

Initiated on 1st April 2001 – Completed on 31st May 2006

Olivier.penanhoat@snecma.fr
Presented by Thomas Noel

LOPOCOTEP / Consortium

EC Scientific Officer

Dietrich Knoerzer (currently)

Reiner Dunker (2001-2003)

Coordinator

Olivier Penanhoat

Snecma

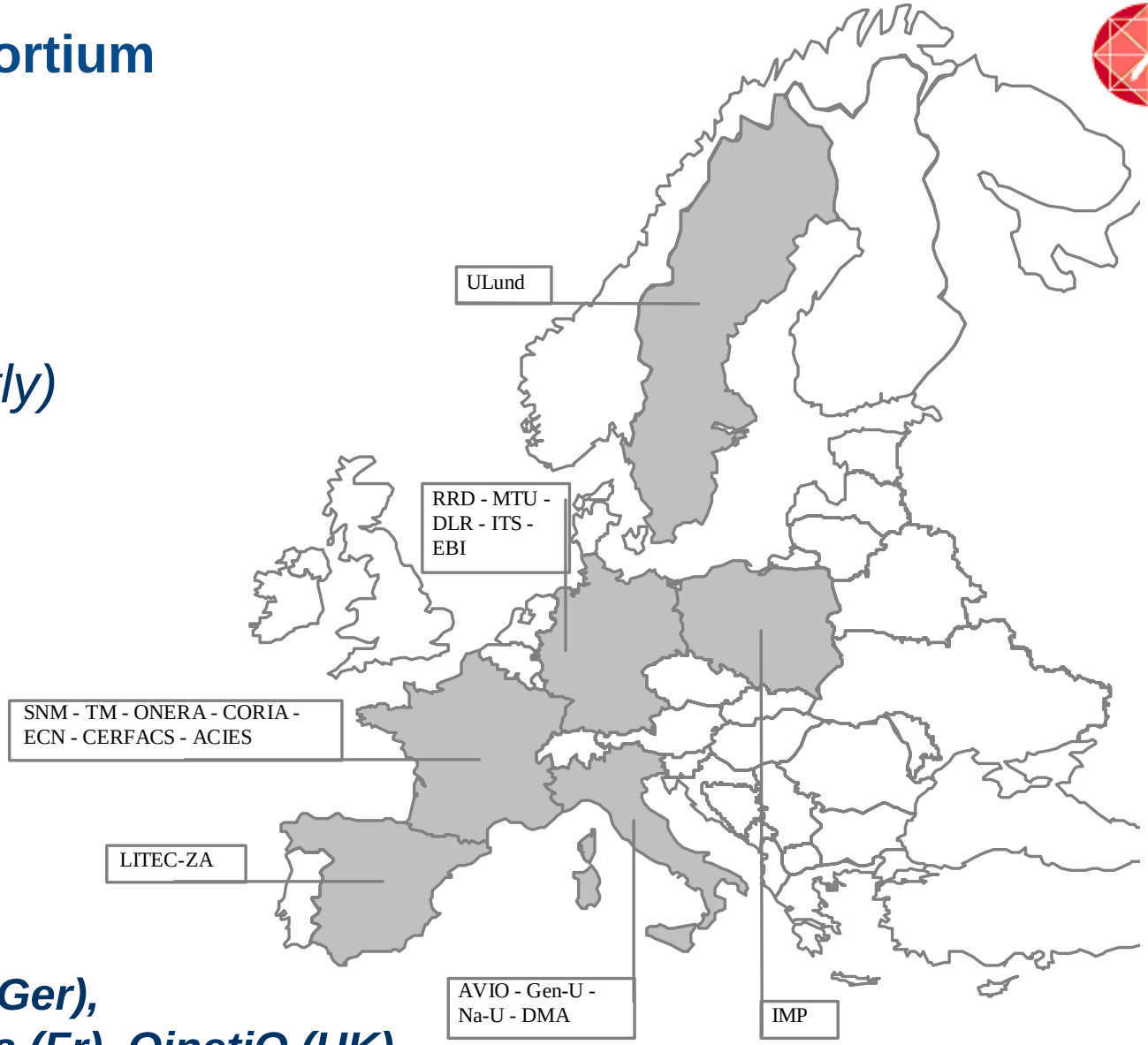

14 Partners

Snecma (Fr), AVIO (It), MTU (Ger), Rolls-Royce (UK), Turbomeca (Fr), QinetiQ (UK), Onera (Fr), Loughborough Univ. (UK), Munich Univ. (Ger), Firenze Univ. (It), Ensma (Fr), Lund Univ. (Sw), Cambridge Univ. (UK), DLR (Ger)

Objectives & Context

This project contributed to the definition and validation of technological bases for a new generation of green engines. Individual components of the combustor were studied separately and then incorporated in a multi-sector or annular combustor representative of large or small engines. These low emission technology concepts relies mainly on lean combustion or RQL approach.

The pollutant reduction targets for this project are:

- An 80% NOx emissions reduction from CAEP2 standard for large engines
- A 50% engine NOx emissions reduction from current production for small engines
- A 20% aircraft CO_2 reduction from current production.

The LOPOCOTEP program is a step towards ACARE environmental objectives

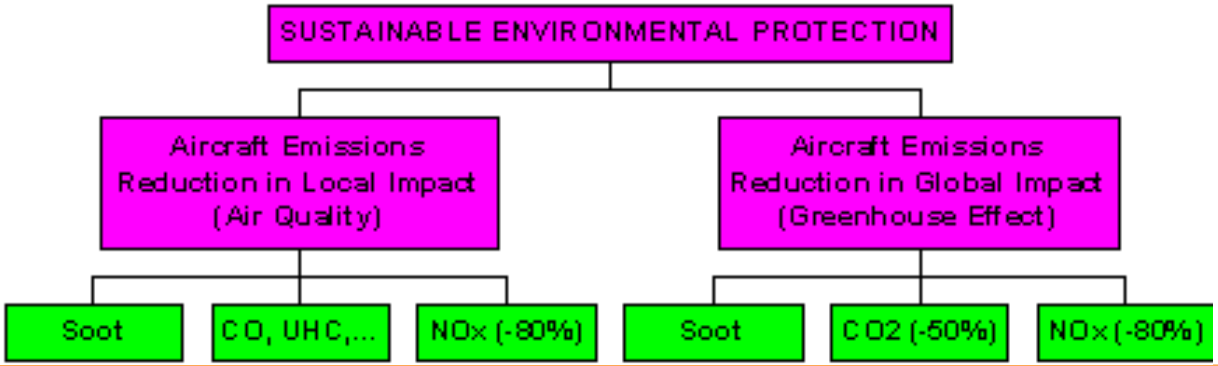

General Scope of the project

WP2: Medium Eng (RRD)
=> Design&test (20b,870k)
=> Nox : -70%

WP3: Small Eng (Tm)
=> LPP/RQL
=> Nox : -50%

WP1: Large Engine (RR)
=> Design (Sn)
=> Design & test (40b,980K)

WP1 : Large engine
WP2 : Medium engine
WP3 : Small engine

WP0: Management (Snecma)

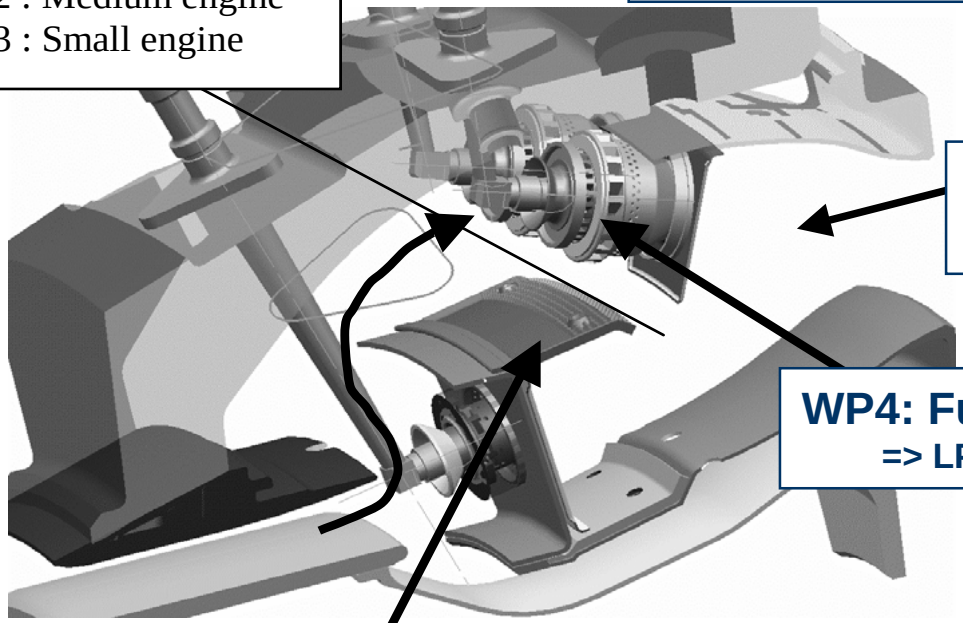

WP5: Combustion diagnostic (Onera)

WP4: Fuel Air Mixing (MTU)
=> LPP modules & RQL

WP6: Advanced Cooling (Avio)

THIS PRESENTATION IS A BRIEF OVERVIEW AND DOESN'T COVER THE IMPORTANT WORK PERFORMED ON COOLING/FUNDAMENTAL PHYSICS//MEASUREMENTS/CFD

Technological solutions investigated in the project

Technologies: 1) MTU: « RQL » 2) SN: « Multi-Point » 3) RRD: LP(P)5
4) Avio: « LPP » 5) TM: « LPP » 6) RR: « LDI »

RR: Large engine combustor

Comparison of Lean Direct Injector with typical in-service airblast fuel injector

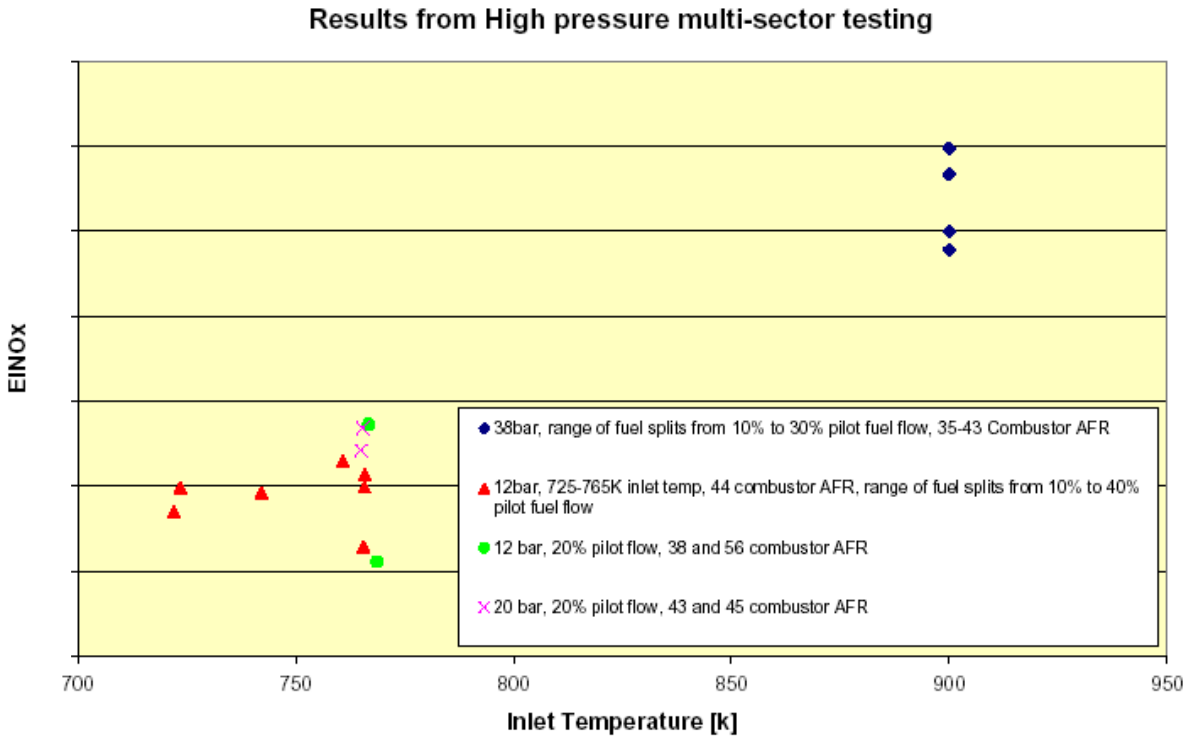

EINOx emissions results from High pressure multi-sector rig programme.

LDI (Lean Direct Injection ≈ Lean airblast concept): Multi-sector tests

SN: Large - Medium engine combustor

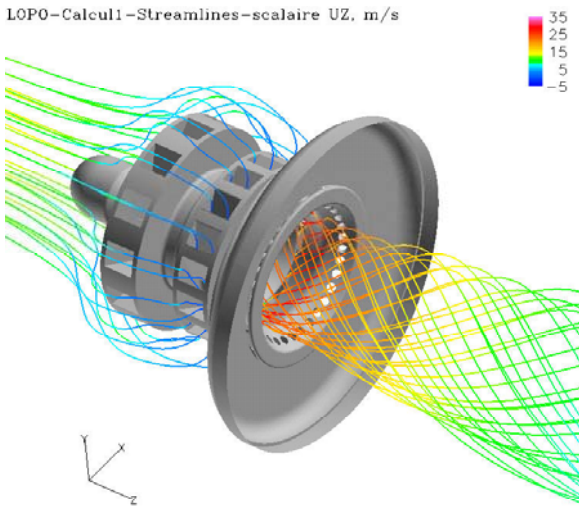

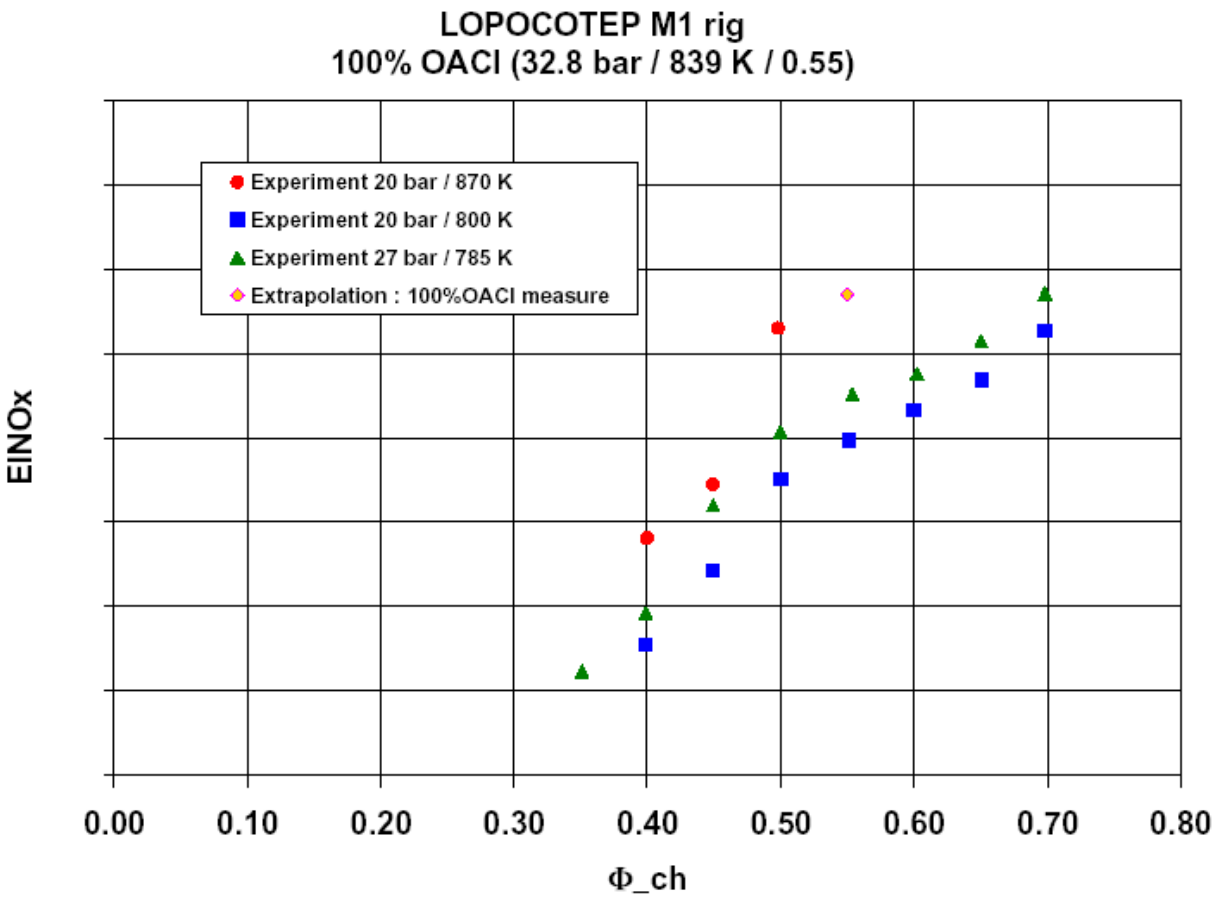

Figure 14 : Deduction of the 100%OACI condition in experiment

Multi-point injection System : Design & flametube tests (Onera)

RRD: Medium engine combustor

HPMS testing

- **HBK2 – DLR / ANECOM**

Objective:

- **Emissions,**
- **Lean Stability &**
- **Pressure Oscillations**
- **of LP(P)5 modules**
- **with split pre-diffuser**

HPMS combustor during instrumentation

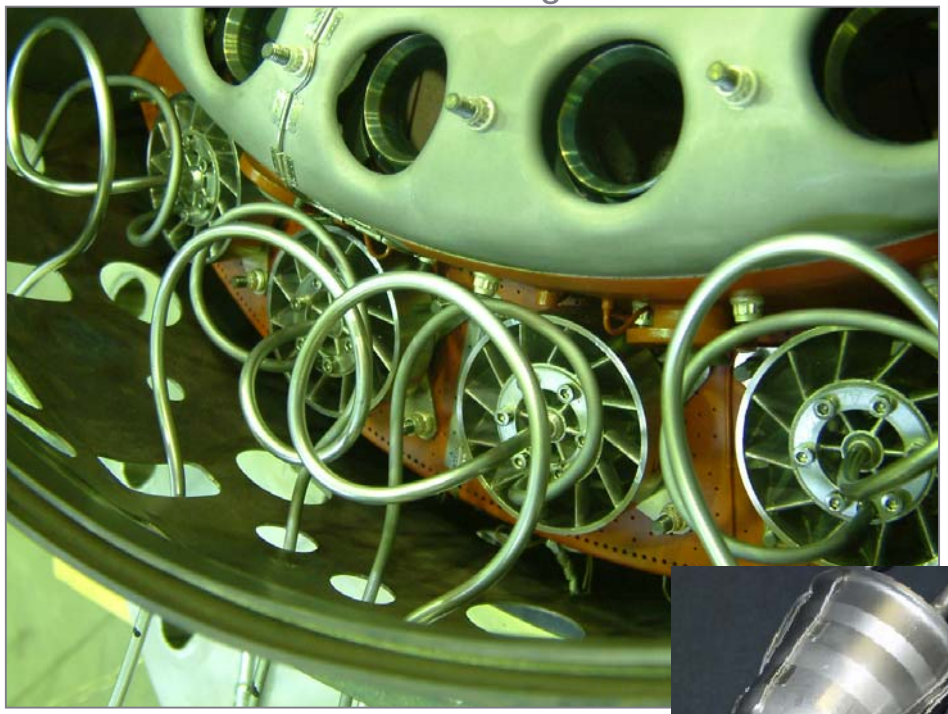

LP(P)2 & LP(P)3 designs

Lean Premixed (Prevaporized) concept : Designs (LP(P)3, LP(P)5, LP(P)6) & flametube tests (Lund and Onera) & Multi-sector combustor tests (DLR)

Snecma SAFRAN Group

MTU: Small engine combustor

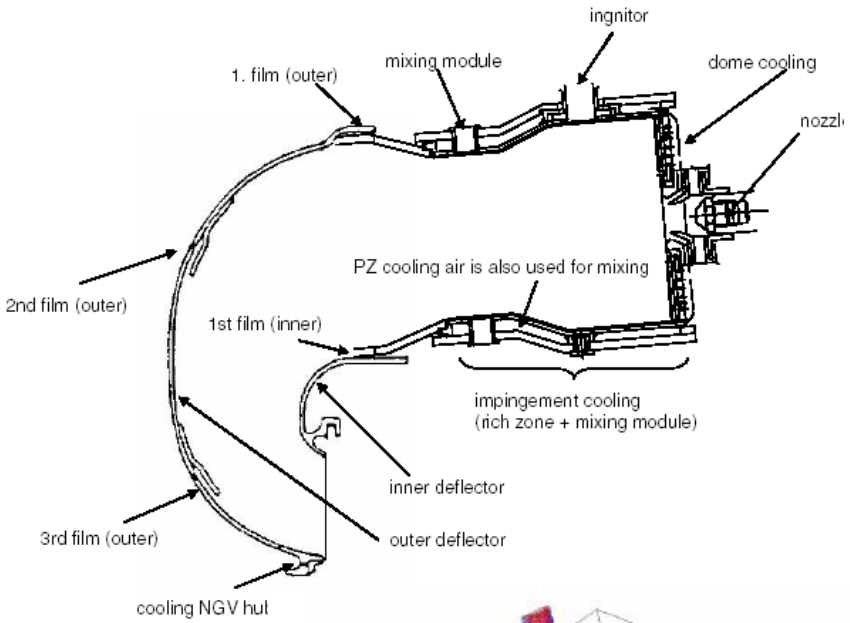

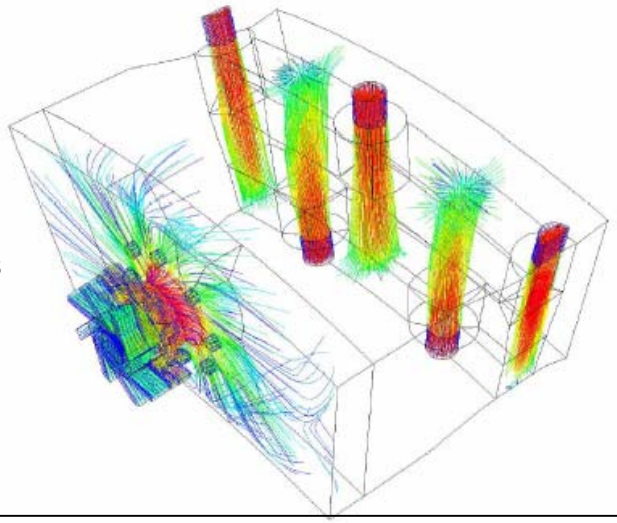

Quenching optimisation
by numerical predictions

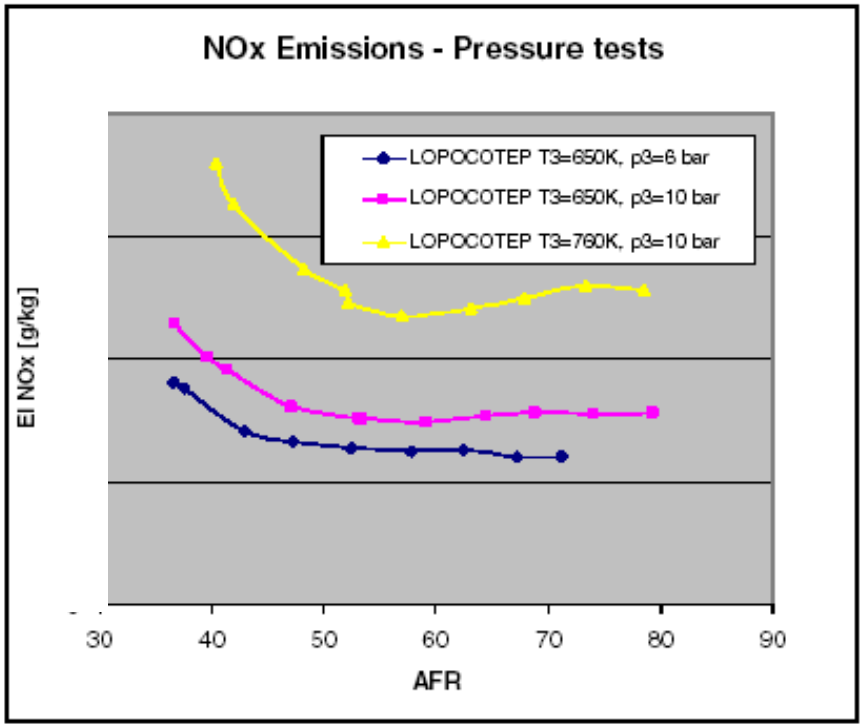

RQL approach : Design & full annular tests (at MTU)

TM & AVIO : Small engine combustor

AVIO/TM COMBUSTOR

AVIO LPP Injector

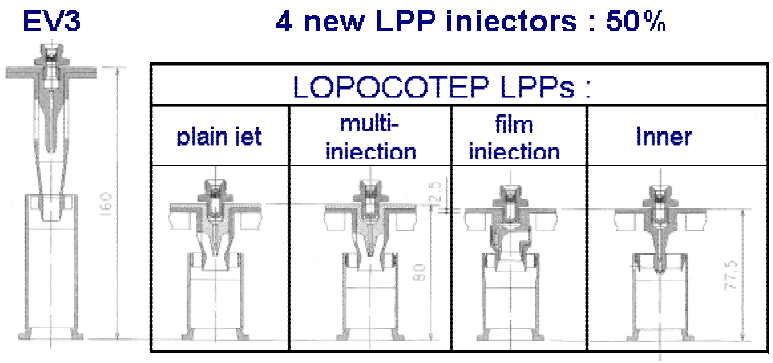

TM LPP Injectors designs

LPP approach : Design & full annular tests at Onera (2 campaigns)

LECT final meeting Status in 2002

ENGINE	SMALL	MEDIUM	MEDIUM-LARGE	LARGE
COMBUSTOR	RETURN BEND	DAC	DAC	DAC
Injection System	LPP + conventional pilot	LPP/Conventional	LPP/RQL (LNIII/1) LPP/Conv (LNIII/2)	LPP/(LP orConv)
Design T/O OPR	≈20b	≈30b	= 30/40b	=40b
Tests max P3	=13b (combust) LNIII/1	≈20b (combust) LNIII/1 (& P3 correction up to 32b)	≈30b (LPP inj) ≈10b (combust) LNIII/1	=3b & 28b (LPP inj) ≈10b (combust) LNIII/2
Hardware	Injector = EV3 full annular combustor	Injectors = LPP1, LPP2 3 sectors combustor	Inject=BE01, BE02, BE03 Two 3 sectors Combustors One RQL 3 sectors Comb	LPP injectors 3 sector combustor
Results	-40% to – 60% Nox reduction LOPOCOTEP : ⇨ Improve performances & size reduction ⇨ RQL concept also assessed	-50% to –65% CAEP2 Nox reduction at OPR=32 LOPOCOTEP : => follow up	3 sectors combustors tests : EINOx ≈10g/kg at T/O RQL module : good behaviour but insufficient mixing in lean zone ⇨ LPP/conventional choice in LNIII/2 Virtual DAC combust : Numerical prediction = -57% CAEP2 (40b) LNIII/2 : HP CLEAN combustor tests foreseen LOPO : follow up	Injector : high EINOx at P3 = 28b 3 sectors combustors tests : ⇨ LNIII/1 : severe instability pbs at HP, serious damage to the combust, ⇨ LNIII/2 : very low EINOx in cruise (≈1,6) LNIII/2 : design & manufacture of multi sector combustor based on ANTLE LOPOCOTEP : Previous hardware testing

LOPOCOTEP preliminary Status

	MTU	AVIO	TM	RRD	SN	RR
Engine class	Small engine			Medium	Large-Medium	Large
OPR* order (bar)	20					38
Concept investigated	RQL reverse bend combustor	LPP reverse bend combustor	LPP reverse bend combustor	LP(P)	Lean Multi-Points	LDI
Investigation summary	injection system caracterisation and full annular combustor (P0 & HP) tests			Injection Syst. Caracterisation and HPMS combustor test	Injection Syst. Caracterisation	HPMS combustor tests
Results analysed	Auto-ignition/Flash-back/LBO & cooling efficiency gaseous pollutants comparison of the 3 concepts			Auto-ignition/Flash-back/LBO & air-distribution control & gaseous pollutants	Auto-ignition/Flash-back/LBO & gaseous pollutants	Stability / Instabilities / Exit temperature profiles / gaseous pollutants
Qualitative judgement	SEE FINAL MEETING FOR MORE DEFINITIVE ASSESSEMENT (a priori: homogeneity of primary zone can be improved)	SEE FINAL MEETING FOR MORE DEFINITIVE ASSESSEMENT	SEE FINAL MEETING FOR MORE DEFINITIVE ASSESSEMENT	SEE FINAL MEETING FOR MORE DEFINITIVE ASSESSEMENT (a priori: LBO behavior acceptable, no instabilities, potential improvements for pollution, coking risk to be evaluated…)	SEE FINAL MEETING FOR MORE DEFINITIVE ASSESSEMENT (a priori: optimisation still required for pollution, further work in TLC…)	Satisfactory
NOx reduction	more than -20% from current technology	currently evaluated	currently evaluated	currently evaluated	-40% CAEP2	-50% CAEP2
Maturity achieved	TRL4-5			TRL3-4	TRL3	TRL4

Final analysis & exploitation

ANALYSIS STILL ON GOING

FINAL MEETING ON 10th & 11th July 2006

See also

WWW.LOPOCOTEP.COM

Necessary Follow-up supported by Numerous programs linked to ELECT cluster: TLC / INTELLECT / TIMECOP …

***