Twenty-Sixth Symposium (International) on Combustion/The Combustion Institute, 1996/pp. 2733–2739

# THE EFFECTS OF FUEL–AIR MIXING ON $NO_X$ FORMATION IN NON-PREMIXED SWIRL BURNERS

TAKASHI TERASAKI
*Research Laboratory, Noritz Corporation, Tokyo, Japan*

SHIGERU HAYASHI
*Thermofluid Dynamics Division, National Aerospace Laboratory, Tokyo, Japan*

This paper describes the low $NO_x$ emissions achieved by a non-premixed, direct fuel-injection burner, equipped with a unique double swirler for gas turbine combustors. The burner has circular and annular air channels to which swirlers are fitted. The inner channel converges into a throat, and gaseous fuel is injected into the air flow by a multihole fuel nozzle. The $NO_x$ emissions and combustion efficiency of the double-swirler burner with natural gas fueling were compared with those of conventional swirl burners of different hub diameters. The measurements of gaseous species concentration in the combustion region at the flame tube exit were made at atmospheric pressure; at inlet air temperatures of 650, 950, and 1100 K; and at equivalence ratios down to the lean flame stability limit. Among the burners tested, the double-swirler burner achieved the lowest $NO_x$ emissions level: at 1800 K gas temperature and 15 m/s reference air velocity, the emissions indices for $NO_x$ with the double-swirler burner, and the conventional small-hub swirler and large-hub swirler burners were 0.5, 1.1, and 2.2 g/kg fuel, respectively. The reasons that the double-swirler burner achieved the lowest $NO_x$ emissions are discussed on the basis of the profiles of gaseous species concentration and gas temperature as well as on the data of fuel–air mixing in the combustion region.

## Introduction

The operating temperatures of gas turbines and air-breathing engines go up continuously for better thermal efficiency. Combustor inlet air temperatures of the 900–1000 K level are targeted in research programs of propulsion systems for the next generation supersonic transport [1] and large high-bypass ratio engines of pressure ratios as high as 40. The operation at higher combustion temperatures leads to significantly increased $NO_x$ emissions, provided that the available $NO_x$ control strategy remains the same. The regulations for pollutant emissions from gas turbines and aircraft, especially for $NO_x$, will be more stringent in the near future. Therefore, the development of low-$NO_x$ combustion technology that is effective at high-temperature operating conditions is required.

It is generally recognized that premixed combustion of lean, homogeneous mixtures has a potential for achieving very low levels of $NO_x$ emissions, even at high inlet air temperatures [2]. At very high inlet air temperatures, however, mixture preparation upstream of the combustion region would lead to autoignition of the injected fuel, which is favored at increased pressures. Unexpected combustion in the mixture preparation zone would damage the combustor hardware and endanger the engine safety.

Some researchers [3–5] have reported the capability of low-$NO_x$ emissions for non-premixed burners, which are completely free from problems such as autoignition and flashback. The experimental results obtained at atmospheric pressure and moderate inlet air temperatures showed that low-$NO_x$ emissions were achieved not only for gaseous fuel [3,4] but also for kerosene sprays [5], while maintaining high combustion efficiency even near flame stability limits. A feature common to these burners is enhanced mixing of fuel and excessive combustion air just downstream of the burner exit by means of strong swirling flows or interacting impinging jets. $NO_x$ emissions depend significantly on the homogeneity of unburned mixtures [6,7] and on the characteristic lifetime of burned gas pockets in the combustion region. Rapid mixing increases mixture homogeneity and shortens the characteristic time for $NO_x$ formation. Later, Tacina [8] categorized these non-premixed, low-$NO_x$ burners into "direct fuel injection."

In the present study, the potential for low-$NO_x$ emissions of the double-swirler burner, developed by Hayashi [9], is investigated at inlet air temperatures up to 1100 K using natural gas. The fuel is widely used for advanced high-temperature stationary gas turbines for power generation and is supposed to be used for future hypersonic propulsion

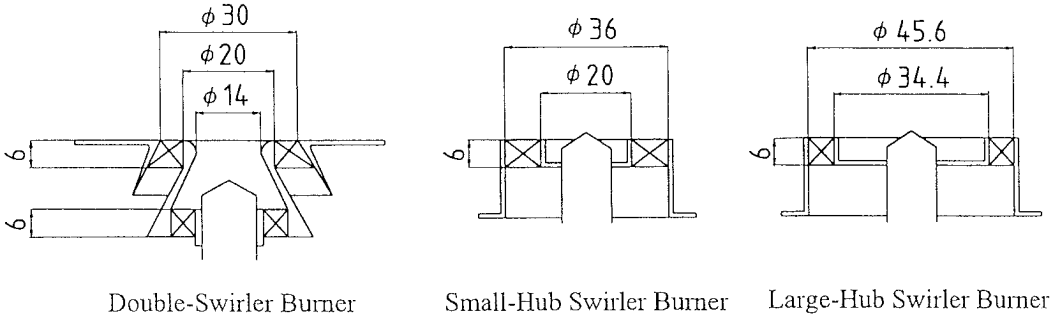


FIG. 1. Schematic drawing of double-swirler and conventional swirl burners used.

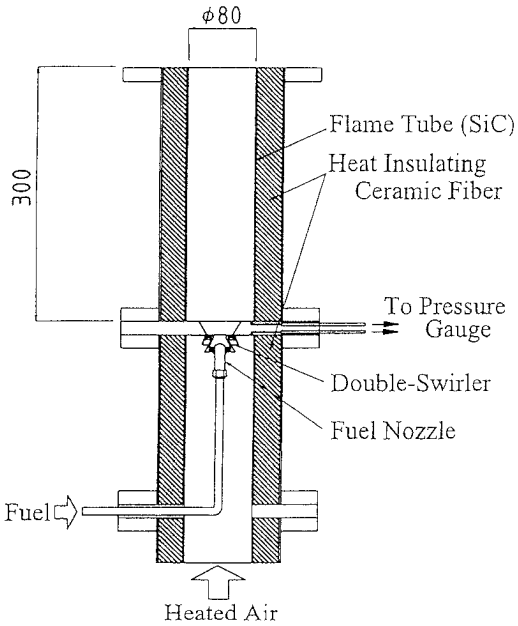


FIG. 2. Schematic drawing of experimental combustor fitted with double-swirler burner.

engines [1]. The $NO_x$ emission levels for the double-swirler burner are compared with those for two conventional burners fitted with large-hub and small-hub swirlers. The reasons for the difference in the levels of $NO_x$ emissions measured for the three burners are discussed on the basis of the measured profiles of gas temperature, local equivalence ratio, and gaseous species including CO, $CO_2$, HC, $O_2$, NO, and $NO_x$ in the combustion region. The data of fuel–air mixing, measured under nonburning conditions, are also used for the discussion.

## Experimental

### *Burner Modules*

The burner modules used in the present study are schematically shown in Fig. 1. The double swirler is composed of coaxial and corotational swirlers with 16 curved vanes of an angle of 45° and a multihole fuel nozzle. Combustion air is split between inner circular and outer annular passages with a ratio of about 1:2. The large-hub and small-hub swirlers, composed of 16 curved vanes of an angle of 45°, have the same annular passage area. The nominal swirl numbers of the small-hub and large-hub swirlers are 0.8 and 0.88, respectively. According to the criterion in Ref. 10, both produce a "strong" swirl, which provides a central recirculation behind the hub.

There is a significant difference between the flow structures downstream of the double swirler and conventional swirlers. The conventional swirler provides a recirculation zone formed behind the hub, through which fuel is injected to the annular air jet. The double swirler, on the other hand, provides a recirculation zone, with its apex close to the throat. A high-velocity jet issuing from the center orifice prevents flash back, and the resulting short residence time excludes the possibility of autoignition in the passage.

The conventional swirl burners are mounted flush to the end wall of the flame tube while the double-swirler burner is mounted on back of the end wall flange of 16 mm in thickness, as shown in Fig. 2. The flange has a diverging conical passage connecting the swirler and the flame tube. The flame tube is a silicone nitride tube, 300 mm in length, 80 mm in diameter, and 10 mm in wall thickness, blanketed with ceramic fiber for minimizing heat losses.

Combustion air is electrically heated, and its flow rate is measured by an orifice flowmeter, and fuel flow rate is measured by a mass flowmeter.

### *Procedures*

Emissions characteristics were investigated for fuel-lean mixtures at inlet air temperatures of 650, 950, and 1100 K and at reference air velocities of 10 and 15 m/s, averaged over the cross-sectional area of the flame tube.

Representative gas sampling was made at 300 mm from the end of the wall by using an X-shaped, area-

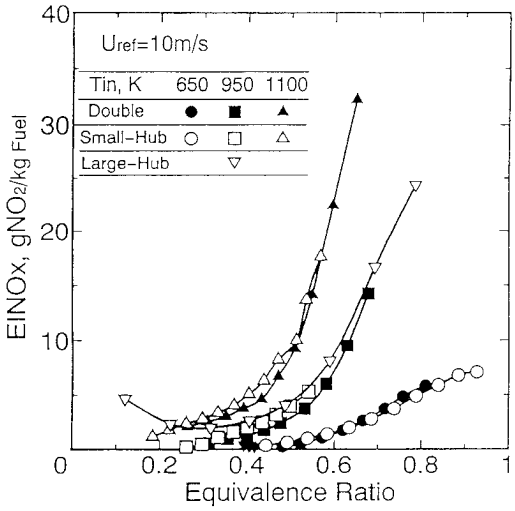


FIG. 3. Effects of inlet air temperature on $NO_x$ emissions from double-swirler and conventional swirl burners.

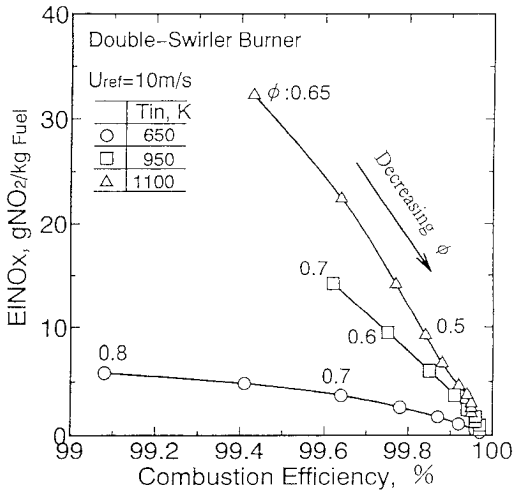


FIG. 4. Correlation of $NO_x$ emissions and combustion efficiency for double-swirler burner.

averaged gas sampling probe with 36 holes in total. To prevent condensation of water vapor in the sampling probe and lines, the feed rate of cooling water to the probe was controlled, and the sampling line was electrically heated to a temperature of about 430 K. Burned gas samples were diluted with pure nitrogen using a capillary flow mixer before entering the gas analyzer. The concentrations of $O_2$, CO, $CO_2$, HC (as $CH_4$), NO, and $NO_x$ were measured by the standard gas analysis procedures: chemiluminescence for NO, nondispersive infrared absorption for CO and $CO_2$, flame ionization for HC, and paramagnetic analysis for $O_2$. The $NO_2$–NO converter with stainless steel catalyst was calibrated using standard $NO_2$ gas to confirm conversion efficiencies greater than 96%. Combustion efficiencies were calculated from the measured gas compositions, assuming that the final combustion products at complete combustion were water vapor and carbon dioxide. Equivalence ratios were calculated not only from the measured air and fuel flow rates but also from the gas compositions measured for the area-averaged gas samples. The equivalence ratios calculated based on the area-averaged gas analysis data at the flame tube exit agreed with those from the measured fuel and air flow rates to accuracies better than 5% for all experimental conditions.

The local species concentrations in the combustion region were measured for the three burners by using a single-hole gas sampling probe at 650 K inlet air temperature, 10 m/s reference air velocity, and 0.5 overall equivalence ratio. The sampling probe was traversed along the diameter at each measurement cross section, and sampled gas was analyzed by the procedure described above.

The mixing of injected fuel and air in the combustion region was investigated under nonburning conditions. A mixture of 1% methane and air, instead of fuel, was injected from the fuel nozzle, and local fuel concentrations in the flame tube were measured using a minute single-hole probe and a flame ionization detector.

## Results and Discussion

### *$NO_x$ Emissions*

Six multihole fuel nozzles of different configurations were preliminary tested for the double-swirler and conventional swirl burners. The results revealed that the effects of number, size, and position of holes and fuel-jet angle of the fuel nozzle on the $NO_x$ emission levels were very small, suggesting that mixing of fuel and air was mainly controlled by the swirling air flow. Therefore, a multihole fuel nozzle with 16 jet holes was used for the later experiments. The total cone angle of fuel jets is 60° for the double-swirler burner and 120° for the conventional swirl burners.

The $EINO_x$ for the three burners is shown in Fig. 3. The effect of inlet air temperature is significant, and $EINO_x$ increases more steeply with equivalence ratio at higher inlet air temperatures. The $NO_x$ emissions for the double-swirler burner are lower than those for the conventional swirl burners at lower equivalence ratios (<0.7). It is generally difficult for conventional swirl burners to attain very low $NO_x$ emissions without deteriorating combustion efficiency [11].

The $EINO_x$-combustion efficiency correlations for the double-swirler burner are shown in Fig. 4 for

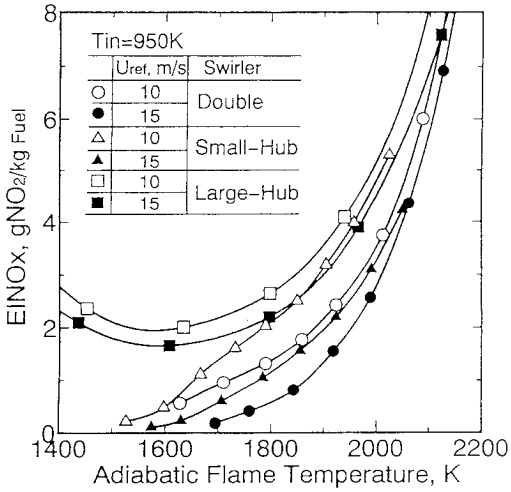


FIG. 5. Comparison of $NO_x$ emissions from double-swirler and conventional swirl burners.

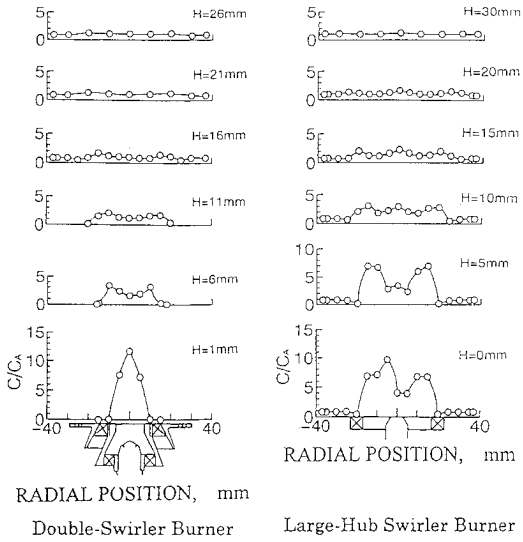


FIG. 6. Normalized fuel concentrations in combustion region for double-swirler and large-hub swirler burners under nonburning condition.

different inlet air temperatures. The numerical values attached to some data points represent equivalence ratios at which the emissions data were measured. With decreasing equivalence ratio along each line, the $EINO_x$ decreases while combustion efficiency increases. Thus, both very low $NO_x$ emissions and very high combustion efficiency (>99.9%) are achieved simultaneously, even at fairly lean conditions. This trend is quite different from that of the conventional swirl burners, for which combustion efficiency deteriorates at very lean conditions. The measured concentrations of HC were less than a few parts per million. The trend of measured CO concentration with overall equivalence ratio was consistent with that of the prediction by adiabatic equilibrium calculations, though the measured CO concentration was lower than the predicted at greater equivalence ratios.

The $NO_x$ emissions levels measured at 950 K inlet air temperature and at 10- and 15-m/s reference air velocities are plotted against adiabatic flame temperature in Fig. 5. For the sake of clarification, only the data measured at flame temperatures up to about 2100 K are included in the figure. The $EINO_x$ for the double-swirler burner is always the smallest, and an increase of reference air velocity results in lower $NO_x$ emissions levels. At 1800 K adiabatic flame temperature and 15-m/s reference air velocity, the $EINO_x$ for the double-swirler burner is about half of that for the small-hub swirler burner and about one-fourth of that for the large-hub swirler burner. The $EINO_x$ for the double-swirler and the small-hub swirler burners decreases monotonically with decreasing adiabatic flame temperature. The $EINO_x$ for the large-hub swirler burner, which sustained flame until the fuel flow was cut off, reaches a minimum at an adiabatic flame temperature of around 1600 K.

### *Fuel–Air Mixing under Nonburning Conditions*

Enhanced mixing of fuel and air in the combustion region is very effective in suppressing $NO_x$ formation. Fuel–air mixing in the double-swirler and the large-hub swirler burners was investigated under nonburning conditions at an inlet air temperature of 350 K and a reference air velocity of 5 m/s.

The profiles of nondimensional fuel concentration $C/C_A$, where $C$ and $C_A$ are the local and overall fuel concentrations, are shown in Fig. 6. In this figure, $H$ represents the distance from the swirler exit to the measurement cross section. The profiles of $C/C_A$ show the radial spread of fuel jets and progress of fuel–air mixing. In the double-swirler burner, at $H = 1$ mm, the profile is a cone with its apex on the axis, suggesting that the mixing of air and fuel in the inner channel is far from complete. The profile comes to have two peaks ($C/C_A = 3.5$) at $H = 6$ mm, but is almost flat at $H = 16$ mm. More uniform profiles of $C/C_A$ are observed further downstream (i.e., $H = 21$ and 26 mm). The measured flame temperature profiles show that the flame started at $H = 10$ mm. Thus, it is expected that mixtures of high uniformity are formed in a very short distance from the double-swirler exit. The M-shaped $C/C_A$ profiles just downstream of the fuel nozzle of the large-hub swirler burner reflect penetration of the fuel jets. With increasing axial distance, the two peaks are diminished and uniform fuel distributions result at $H = 30$ mm.

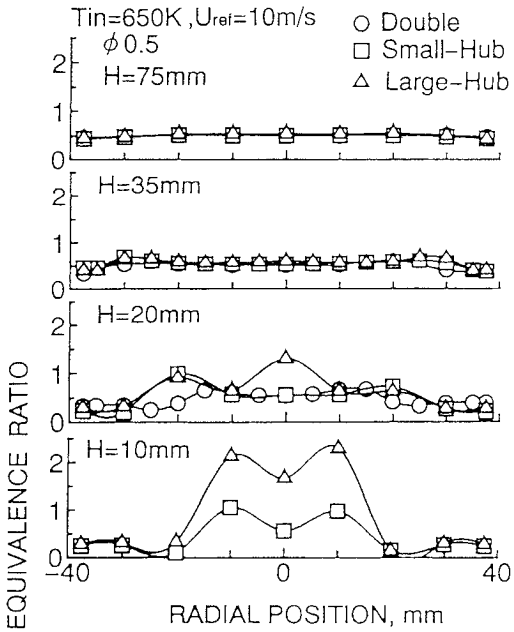


FIG. 7. Profiles of equivalence ratio in combustion region for double-swirler and conventional swirl burners.

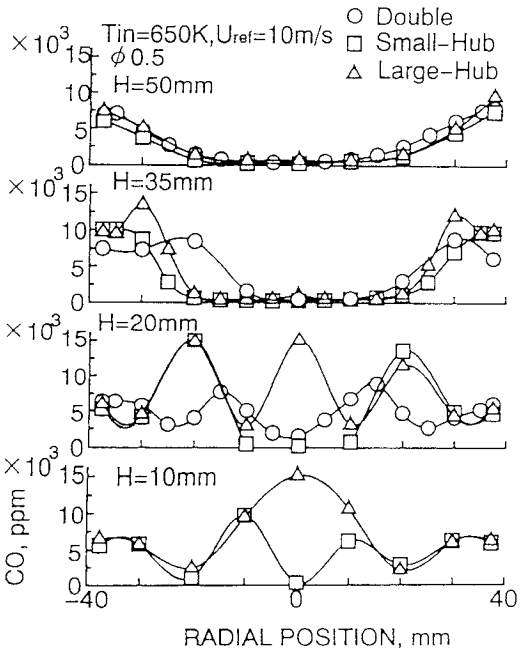


FIG. 8. CO concentrations in combustion region for double-swirler and conventional swirl burners.

Uniform profiles of fuel–air ratio are obtained in a shorter distance in the double-swirler burner than in the conventional swirl burner. A comparison of the fuel concentration profiles shows that the fuel-rich region is smaller in the double-swirler burner than in the large-hub swirler burner. That rapid fuel–air mixing in the double-swirler burner is the reason for the lower $NO_x$ emissions of the double-swirler burner.

### *Profiles of Equivalence Ratio and Gaseous Species Concentrations*

Measurements of species concentrations and gas temperatures were made at different axial positions in the flame tube at 650 K inlet air temperature, 10-m/s reference air velocity, and 0.5 overall equivalence ratio.

#### Local Equivalence Ratio

The profiles of local equivalence ratio in the three burners are compared in Fig. 7. At $H = 10$ mm, the profiles for the conventional swirl burners are M-shaped and the mixtures are rich in the central region of the large-hub swirler burner. The profiles are increasingly uniform with axial distance. They almost agree with each other at $H = 35$ mm, and very uniform profiles result at $H = 75$ mm for all the burners.

A comparison of the development of profiles for the burners shows that fuel–air mixing is the slowest in the large-hub swirler burner. The fuel-rich zone in the large-hub swirler burner is the reason for high $NO_x$ emissions of the burner.

#### Carbon Monoxide and Unburned Hydrocarbons

The CO profiles for the three burners are compared in Fig. 8. The variation of the CO profile with axial distance is generally consistent with that of HC profile, which is not included in the paper because the allowable length of a paper is limited. It is shown that the hub size has a significant effect on the CO and HC profiles at $H = 10$ and 20 mm. The CO concentration is highest on the axis for the large-hub swirler burner while minimum for the small-hub swirler burner. Except for the central region, the CO and HC profiles are the same for the conventional swirl burners. At $H = 50$ mm, the profile of CO concentration became high near the flame tube wall, and HC concentration became very low over the cross section. The oxidation of CO in the region near the wall is slow because of lower gas temperatures, though the profiles of CO become nearly uniform for both burners at $H = 100$ mm.

#### Oxides of Nitrogen

Figure 9 shows the profiles of $NO_x$ emissions in the flame tube for the three burners. It is shown that

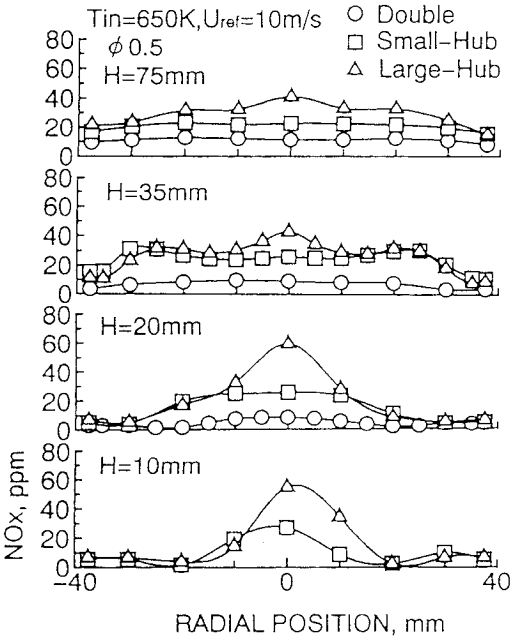


FIG. 9. $NO_x$ concentrations in combustion region for double-swirler and conventional swirl burners.

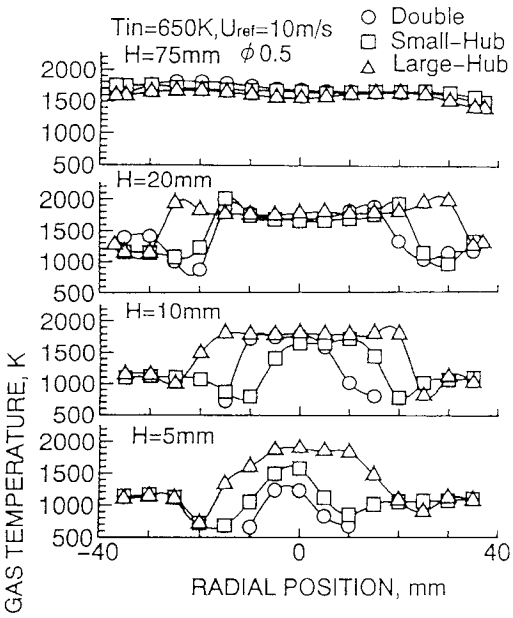


FIG. 10. Profiles of gas temperature in combustion region for double-swirler and conventional swirl burners.

at $H = 20$ mm, the *peak* $NO_x$ concentration for the double-swirler burner is about one-third of that for the small-hub swirler burner and about one-sixth of that for the large-hub swirler burner. With increasing axial distance, the $NO_x$ concentration decreases in the central region, and uniform profiles result. The reduction of $NO_x$ concentration in the central region for the large-hub swirler burner is remarkable. The profiles are nearly uniform at $H = 75$ mm not only for the double-swirler burner but also for the small-hub swirler burner. A comparison of the $NO_x$ concentrations measured at $H = 75$ mm for both burners shows that the $NO_x$ concentration (about 10 ppm) for the double-swirler burner is about half of that for the small-hub swirler burner. The $NO_x$ profile for the large-hub swirler burner is not uniform even at $H = 75$ mm and has a region of high $NO_x$ concentrations (about 50 ppm) on the axis. It is noted that the $NO_x$ concentration increases remarkably in the upstream region of the flame tube and increases little in the downstream region of $H = 75$ mm. The order of the three burners in respect to $NO_x$ emissions concentrations at $H = 75$ mm does not change until the flame tube exit, as shown in Fig. 5. The profiles of equivalence ratio for the double-swirler burner, as shown in Fig. 7, are more uniform than those of conventional swirl burners. Moreover, the regions of high gas temperature in the upstream region of the flame tube is smaller in the double-swirler burner than in the conventional swirl burners, as shown in Fig. 10. The results confirm that the $NO_x$ concentration, especially in the upstream region of the flame tube, for the double-swirler burner is lower than that for the conventional burners.

## Conclusions

In this study, a non-premixed, direct fuel injection burner with a unique double swirler was developed for low-$NO_x$ and low-CO emissions gas turbine combustors. The emissions characteristics of the burner are compared with those for the swirl burners of conventional configurations. The reasons for the low emissions of the double-swirler burner are discussed on the basis of the measured profiles of equivalence ratio and gaseous species concentrations, as well as of the data on fuel–air mixing in the combustion region.

Major conclusions are as follows:

1. The compatibility between low-$NO_x$ emissions and high combustion efficiency was demonstrated using the double-swirler burner, which directly injected natural gas into the combustion region. The $NO_x$ emissions levels for the burner were significantly lower than those for conventional swirl burners. The $NO_x$ emission levels for

the large-hub swirler burner were much higher than those for the small-hub swirler burner.

2. $NO_x$ was formed rapidly in the upstream region of the flame tube.
3. The profile of equivalence ratio in the upstream region of the flame tube for the double-swirler burner was more uniform than that for conventional swirl burners. The mixing of fuel and air was more rapid in the double-swirler burner than in the conventional swirl burners, which resulted in uniform equivalence ratio profiles in the combustion region. The improved mixing of directly injected fuel and air in the double-swirler burner is the reason for the lower $NO_x$ emissions of the burner.

## REFERENCES


1. Shaw, R. J., Gilkey, Samuel, and Hines, Richard, Engine Technology Challenges for A 21st Century High-speed Civil Transport, *ISAAC 93-7064*, 1993.
2. Hayashi, S., Effects of Heterogeneity of Mixtures on Gaseous Emissions in Premixed/Prevaporized Combustion, 1983 Tokyo International Gas Turbine Congress, pp. 245–251, 1983.
3. Hussain, U. S., Andrews, G. E., Cheung, W. G., and Shahabadi, A. R., Low $NO_x$ Primary Zones Using Jet Mixing Shear Layer Combustion, *ASME 88-GT-308*, 1988.
4. Alkabie, H. S., Andrews, G. E., and Ahmad, N. T., Lean Low $NO_x$ Primary Zones Using Radial Swirlers, *ASME 88-GT-245*, 1988.
5. Hayashi, S., Compatibility between Low-$NO_x$ Emissions and High-combustion Efficiency by Lean Direct Injection Combustion, *ASME 95-GT-276*, 1995.
6. Lyons, V. J., Fuel/Air Nonuniformity—Effect on Nitric Oxide Emissions, *AIAA J.* 20(5):660–665 (1982).
7. Fric, T. F., Effect of Fuel-Air Unmixedness on $NO_x$ Emissions, *AIAA 92-3345*, 1992.
8. Tacina, R. R., Low $NO_x$ Potential of Gas Turbine Engines, *AIAA-90-0550*, 1990.
9. Hayashi, S., *Technical Memorandum*, TM470, National Aerospace Laboratory, 1982.
10. Beer, J. M., and Chigier, N. A., *Combustion Aero-Dynamics*, Appl. Sci. London, 1972.
11. Koff, B. L., Aircraft Gas Turbine Emissions Challenge, *ASME 95-GT-422*, 1993.


# COMMENTS

*Prof. C. Bruno, University of Rome, Italy.* The results presented are extremely interesting in that very high combustion temperatures correspond to very low levels of $NO_x$. At very low equivalence ratio and low combustion temperatures, there is recent evidence that $N_2O$ may form, compensating for the NO reduction. Will the authors look into this issue in the future?

*Author's Reply.* Thank you very much for your interest in our study and for your suggestion. We are very sorry to say that the $N_2O$ concentration has not been measured. We are now preparing to measure $N_2O$.

•

*Christian Eigenbrod, ZARM Institute, Germany.* How high is the pressure drop of your swirler compared with the conventional type?

Are the spin directions of the two swirlers parallel or counterwise?

*Author's Reply.* We did not measures the pressure drop of the conventional swirler. The pressure drop of the double-swirler was about 7% at 650 K inlet air temperature, 10 m/s reference air velocity, and 0.5 equivalence ratio.

The double-swirler is a co-rotational swirler.