AIAA 94-0113

TURBULENT SWIRLING REACTING FLOW

David G. Lilley
School of Mechanical and Aerospace Engineering
Oklahoma State University
Stillwater, Oklahoma 74078

32nd Aerospace Sciences Meeting & Exhibit
January 10-13, 1994 / Reno, NV

For permission to copy or republish, contact the American Institute of Aeronautics and Astronautics
370 L'Enfant Promenade, S.W., Washington, D.C. 20024

TURBULENT SWIRLING REACTING FLOW

David G. Lilley*
Oklahoma State University
Stillwater, Oklahoma 74078

ABSTRACT

Many combustion systems utilize the strong favorable effects of applying swirl to injected air and fuel, so aiding the stabilization of high-intensity combustion processes, and good flowfield characterization is of prime concern. The improvement and use of modeling work will complement and significantly reduce the cost of experimental development programs. Numerical procedures for predicting combustion chamber flows (which in practice are models of physical processes (turbulence, radiation, combustion and two-phase effects) and computer programs for solving the appropriate level of sophistication of the resulting differential equations (0-, 1-, 2- and 3-D) approaches. This paper looks at recent advances in the experimentation, modeling and prediction of combustor swirl flows, its aim being to review the experimental and theoretical difficulties, discuss developments, and demonstrate that useful predictions are already being made. Areas in which further research will be most useful are indicated, including the simulation of complex chemistry, the turbulent-reaction interaction problem, the utilization of finite element methods of computation, and application to realistic three-dimensional problems.

INTRODUCTION

Reacting Flow Problems

Practical combustion systems have complex flowfields, in which flame characteristics are often enhanced by the use of, among other things: swirling inlet flow, laterally induced jets and contoured boundary geometry. The combustor design engineer must develop economic, efficient and pollutant-free combustion systems, in which turbulent reacting multiphase swirling flow occurs. In design situations, costly and time-consuming experimental procedures must be supplemented with mathematical models. These models bring benefits, and entail costs; a good model is one with a high ratio of benefit to cost. Benefits include knowing quantitatively, in advance, what will be the performance of equipment which has not yet been built, or which has not yet been operated in the manner under investigation. The mathematical model cannot stand alone, but through its use with carefully selected experiments, development time and cost can be drastically reduced. Currently popular are mathematical models which simulate the physical processes (turbulence, radiation, combustion, pollutant formation and multiphase effects) and solve an associated set of coupled partial differential equations via an iterative finite difference scheme. Recent review papers provide the background (1-7) with recent texts (8,9) providing useful summaries.

Swirl Flows

The dramatic effects of swirl in inert and reacting flow systems have been known and appreciated for many years. Some effects are favorable and the designer strives to generate the required amount of swirl for his particular purpose. Swirling flows result from the application of a spiraling motion, a swirl velocity component (also known as a tangential or azimuthal velocity component) being imparted to the flow by the use of swirl vanes, by the use of axial-plus-tangential entry swirl generators or by direct tangential entry into the chamber. Experimental studies show that swirl has large-scale effects on flowfields: jet growth, entrainment and decay (for inert jets) and flame size, shape, stability and combustion intensity (for reacting flows) are affected by the degree of swirl imparted to the flow. This degree of swirl is usually characterized by the **swirl number S**, which is a nondimensional number representing axial flux of swirl momentum divided by axial flux of axial momentum, times the equivalent nozzle radius. Many further details can be found in a recent test (9).

The Present Contribution

Consideration is given to the major features of the characterization of swirl flow combustion with emphasis on application to practical combustors. An indication of diagnostic possibilities is given, including discussion of

*Professor, School of Mechanical & Aerospace, Fellow AIAA.
Copyright, © 1994 by David G. Lilley. All rights reserved.
Published by AIAA with permission.

flowfield manifestation and problems specific to turbulent reacting flows. Concerning modeling, since solution of the basic governing equations yields predictions which are realistic only if the physical processes are correctly expressed in mathematical form, suitable simulation models to effect closure are given and followed by discussion of computer prediction techniques themselves. The role of fluid dynamics in combustion is presented from the practical point of view, indicating the degree of complexity of the processes, types of combustion, types of burning techniques and the specific role of fluid dynamics and, in particular, swirling jets. Practical application areas are identified including: reciprocating engines, furnaces, gas turbine, pulsejet, ramjet, scramjet and rocket engines. The final Closure summarizes the status, and highlights the areas in which further research will be most useful.

FLOWFIELD DIAGNOSTICS

Flowfield Manifestation

Flowfields typically encountered in turbulent reacting or nonreacting flows are usually quite complex and an understanding of their fluid dynamics requires a knowledge of the temporal and spatial values of flow parameters. The insight into a physical process can always be improved if the physical structure produced by or related to that process can be analyzed with the aids of experimental diagnostics, on theoretical modeling, or both. There are several reasons for studying flowfields and turbulence experimentally. One experimentalist may wish to have a general physical picture of mean flow and turbulence so as to generate an empirical or semi-empirical relationship which may be applied to direct practical application to the problem under investigation. Another experimentalist may require detailed results relating to fine structures in order to develop and test a theoretical model. These varying needs can be satisfied using a variety of diagnostic techniques, for example, invasive physical probes and non-invasive optical probes. An overall view of flow structure produced in a physical process can be observed with aids to visualization. In order to trace the fluid motion, one must utilize a technique by which the flowfield may be manifested, for example, optical techniques. Flow visualization methods play an important role in understanding fluid dynamics by revealing the mean streamline flow patterns which show the main flow directions and relative components of velocity. Such techniques yield information about the complete flowfield under study without physically interfering with the flow. In contrast, a single measuring instrument, such as a velocity, temperature, pressure or concentration probe, provides information for only one point in the flowfield. In addition, it disturbs the flow by its physical presence and this can significantly affect experimental results. Intrusive pressure, thermocouple, and hot-wire probes, besides introducing disturbances into the flow, have two more disadvantages: low frequency response, and the signal response being affected by both velocity and density. At any point in a reacting flowfield, time-mean values of velocity and density parameters are constant during quasi-steady operation of a combustion system, but they may fluctuate independently and in uncertain correlation. Intrusive probes have the advantage that they are less fragile and can be used in large-size flames. In order to reduce the basic difficulties, there has been a continuing development effort to miniaturize the physical size of the measuring probes and to improve the quantitative interpretation of flow visualization techniques. Flow visualization techniques have played an important role in the understanding of complex fluid-mechanical problems in several areas, for example: jet flows both with and without swirl, mixing layers, boundary layers, and turbulent shear layers.

A method of flow visualization entails the addition of foreign particles into the optically-transparent flowfield that might be gaseous or liquid. By selecting suitably sized particles, one is able to assume that the motion of these particles, both in magnitude and direction, is the same as that of the flowfield under investigation. An important feature of many flow visualization techniques is that one can derive semi-quantitative or quantitative information from the resulting flow picture. The visualization method is therefore an indirect method since the observation is made of the foreign particles instead of the fluid flow. The difference between the velocity of fluid and foreign particles can be minimized, but not made zero, by selecting particles of the same density as that of the fluid. These methods yield satisfactory results in steady flows but for unsteady flows, for example: reciprocating engines, pulsejet engines, etc., the error can be large because of the inertia of the particles. The method an also give erroneous results if the fluid flow is compressible with the thermodynamic state of the fluid varying in the flowfield. Many turbulent flow systems possess large eddy structures, whereas the fine, micro-structures are common to all turbulent systems. In order to categorize a flow system, the examination of large and fine micro-structure for their formation, growth and convection requires diagnostic tools which have minimal or no physical interference with the fluid flow. Large eddy structures, or sizes comparable to the width of

mixing zones, have been identified in many flow systems.

Several different optical phenomena have been utilized as the basis for specific instruments with scattered light methods being most popular. The light scattering detection techniques can be separated into two categories: those that make size measurements of single particles, and systems that measure the light scattered by a collection of particles in the collimated laser beam. Multiple scatter detection systems can typically make size measurements in particle fields having a higher number density than corresponding single particle counters can handle. Unfortunately, the method does not provide a good spatial resolution and it does not measure the velocity of the droplets, thus limiting its application in spray nozzle measurements. In addition, the method assumes a **priori** particle size distribution which it fits mathematically. Optical methods have their own limitations, a major one being the need for high quality optical access to the test region. The limited dynamic range of these instruments is also of concern. The electrical aerosol analyzer measures the in-situ size distribution in the range below that of the light scattering method, that is below that 0.3 um. The operating principle of this analyzer is that the mean electrical mobility of a diffusionally-charged particle is a function of particle size. No method, of course, is completely free of ambiguity and none yields ample information to completely characterize the local properties of the spray. As yet no single instrument has proven completely satisfactory for use over a wide size range, although recent developments indicate that this desire can eventually be fulfilled.

Turbulent Flow Problems

In turbulent flow the eddies extract energy from the mean flow and retain it for a while prior to dissipating it in small eddies. The turbulent kinetic energy found in eddies is directly proportional to the sum of the normal Reynolds stresses $\overline{u'^2}$, $\overline{v'^2}$ and $\overline{w'^2}$. The smaller eddies are much weaker than those that produce most of the Reynolds stress, since most of the energy is immediately transferred to the smallest eddies which are quickly dissipated by viscosity. The apparent mean stresses in turbulent flow are determined by the velocity fluctuations which depend upon the flow history.

In turbulent combustion processes, knowledge of the time-mean properties (for example, velocity, temperature, pressure, concentration, etc.) are useful but not sufficient to determine the reaction rate. The temporal characteristics of a turbulent flow are important since they govern not only the mixing process, but also the way in which the combustible mixture reacts and heat is transferred to the surroundings. They also yield a great deal of insight into pollutant emissions from, and combustion efficiency of, the system. A small increase in overall combustion efficiency can save many millions of dollars on a national scale. For the modeling and prediction of the spatial distribution of reaction rates, it is desirable to know the turbulence properties of the fuel and oxygen concentrations.

Instantaneous and local measurements within turbulent reacting flows are now possible with pulsed or chopped laser light sources, which can be tuned to selected wavelengths for minimizing spectral interferences. Their application to studies of combustive flows should allow the measurement of single and joint probability density functions of fluctuating properties. Recent developments in laser probes clearly reveal that it is not unrealistic to measure directly one-point time-averaged correlations, such as components of the Reynolds stress tensor $\tau_{ij} = -\overline{(\rho u_i)' u_j'}$, the turbulent heat flux vector $J_{hi} = +\overline{(\rho u_i)' h'}$ and the turbulent mass flux vector for the j-th chemical species $J_{mi} = +\overline{(\rho u_i)' m_j'}$. These stress and flux expressions occur in the time-averaged equations of conservation of momentum, energy and chemical species, respectively, where ρ is the density, u_i is the ith velocity component, h is the stagnation enthalpy, and m_j is the mass fraction of the jth chemical species.

The determination of these and other correlations of fluctuating quantities can then be incorporated into models of reacting flows. To date, most methods for the prediction of local changes in the distribution of reaction rate, temperature, concentration, etc., are based on empirical or semi-empirical relationships. Significant developments have been made in laser-based experimental diagnostics, which are now widely used to measure time-mean and RMS velocity, temperature and concentration. Techniques for measuring fluctuating local temperature and concentration would be highly desirable. The development of a detailed microscopically-based understanding of the chemistry of combustion presents a considerable challenge. This is because in a combustion system several chemical and physical processes interact together and proceed simultaneously. What we know is that a flame involves

a large chemical reaction network through which heat is produced. The process results in steep gradients of both molecular concentrations and temperature; the reaction rates and mechanistic paths of the whole network are sensitively dependent upon the above parameters. It is clear therefore that the chemistry is woven inextricably with heat transfer and diffusion of reactive species throughout the flowfield. All these aspects must be considered with care and attention given to the proper selection of the molecular input parameters, for example, transport coefficients and rate constants, as well as detailed unambiguous verification of the results. This is not a small task and, at present, we only have the capability to picture very simple flames. The desire for accomplishing a microscopically-based description for larger turbulent diffusion flames of industrial importance is just now becoming feasible.

Combustion Problems

In flows with chemical reaction the flow characteristics are further complicated by nonlinear interactions between chemical and fluid dynamical processes. The usual concept of a turbulent flame front is that of a laminar flame front with irregularities caused by fluctuating velocity components, leading to the formation of a wrinkled flame front having larger surface area than the corresponding laminar flame front. Schlieren and shadow photographs of the flame fronts reveal that the irregularities in the flame front are a product of turbulent scale and intensity in the flow. The question of flame-generated turbulence has been a topic of interest at several symposia and meetings. Ignition of the combustible mixture in confined flows results in expansion and acceleration of the flow. Acceleration increases the shear and strain and it is not clear whether there are any additional mechanisms that influence the increase in turbulence intensity. In unconfined flows, however lack of dynamic confinement results in very little, if any, increase in pressure. Experimental results of mean and RMS velocity in confined flows clearly show expansion and acceleration. Relatively small increases in turbulence intensity appear to be primarily associated with increases in strain and the associated velocity gradients. It is possible that combustion occurs in microexplosions which in turn cause turbulence and local pressure increases.

In two-phase flows, accurate size and velocity measurements of liquid sprays or solid particles are important for a broad spectrum of applications. General areas of application include characterization of fuel sprays, agricultural sprays, soot formation and growth, diesel engines, aerosols, pigments, evaluation of scrubbers, etc. Fuel spray applications are of current interest in combustion research because of the need to improve the combustion efficiency and reduce the particulate and other pollutants emission levels.

Fuel sprays are complex dynamic phenomena, entailing atomization, coagulation, dispersion, heat and mass transfer, and chemistry, which are subject to intimate interactions within a gaseous flowfield. Research into fuel atomization and fuel-air preparation requires the measurement of fuel droplet size, velocity-size correlations, and mean and RMS velocities of air and fuel. Complete characterization of local properties in a spray includes such attributes as particle size distribution and number density, a velocity distribution function related to droplets of different sizes, mean velocity of the gas phase, local gas and liquid temperatures, composition of both the gas and liquid phases, turbulence properties, and so on. The reliable measurement of any one of the above properties is not trivial.

Sampling techniques can, of course, be used to withdraw a representative sample from a particle-laiden flow. The sampling process always disturbs the flowfield to some extent even if the sample is withdrawn isokinetically. In reacting flowfields at high turbulence levels, it is particularly difficult to extract a representative sample with any degree of confidence. Particle agglomeration and deposition in a sampling system can alter the size distribution prior to measurement. in addition, real-time measurements are not possible with sampling methods and in some cases ample preparation and analysis can be time-consuming. Despite the above limitations, sampling methods are still useful in many instances. The increased need for non-perturbing real-time in-situ measurements of particle size has motivated the development of a wide variety of optical methods. Only in recent years have serious attempts been made to obtain **in-situ** particle-size measurements.

Where the particles are large enough, the direct image photographic method is least ambiguous and most reliable but, unfortunately, it is rather slow and can be employed only for sprays of a continuous nature. Video systems can be used for particle analysis but even then the systems are intrinsically slow because of limitations imposed by the standard video framing rate. The related problem of solid particulate size measurements is of interest in smoke, particulate and pollutants reduction, fluidized bed combustion, pigments manufacture and other similar areas.

In flame combustion processes, the efficient utilization of energy requires maximization of the overall energy efficiency. In a boiler plant, the biggest heat loss is associated with the flue gases. In general, *improvements in overall energy efficiency of processes* require careful examination of combustion, mechanical and thermodynamic efficiency. The thermal efficiency is the ratio of heat gained by the load to the energy supplied via fuel and is influenced by the rates of heat transfer from flames to the combustion chamber walls and, hence, on temperature distributions within the combustion chamber. Control of the distributions of temperatures within the combustion chamber therefore has a potential which can lead to improvements in overall thermal efficiency. In an electrically heated system, approximately 2/3 of the original fuel energy is lost in the power generation and transmission stages, so that an efficiency in excess of 33 percent is difficult to achieve with an electrical system.

The primary concern of a combustion engineer is to achieve maximum combustion efficiency with minimum or no pollutant emissions. High combustion efficiency requires complete combustion of fuel supplied to the combustor. Any unburned fuel leaving the system contributes not only to combustion inefficiency but also the pollutant emission levels, since it is also considered to be a pollutant. The incentive for complete combustion of fuel is therefore twofold - increased combustion efficiency and reduced emission of percent can be achieved provided the fuel is maintained at elevated temperatures in the presence of an oxidizer for a sufficiently long residence time. Combustion efficiencies lower than 100 percent are primarily due to other design considerations - a typical example being refineries and oil wells where Coanda flares are used for the incineration of explosive gases.

FLOWFIELD SIMULATION

Background

Several previous publications focus at length on the problems of adequate mathematical simulation. Numerical prediction studies are generally based on a version of the TEACH computer code, (10) of which the *STARPIC version is described at length (11). Earlier* nonreacting predictions (12) have been extended to simple chemically-reacting situations (13) in axisymmetric swirling flow configurations. Advances have also been made elsewhere and applied to other 2-D (14-17) and 3-D (18-23) problems of interest to the combustor designer. Several of these discuss at length some of the more recent and more accurate simulations of the combustion process, with inclusion of radiation heat transfer, and carbon monoxide and nitric oxide prediction.

The Governing Equations

The transport equations are all similar and contain terms for convection, diffusion and source S_ϕ of a general variable ϕ. Introducing turbulent exchange coefficients and the usual turbulent diffusion-flux laws, it can be shown that the similarity between the differential equations and their diffusion relations allow them all to be put in the common form:

$$\frac{\partial}{\partial t}(\rho\phi) + \text{div}\,(\rho\underline{v}\phi - \Gamma_\phi \,\text{grad}\,\phi) = S_\phi$$

Where ϕ is the general dependent variable. The forms of the source term S_ϕ depend on the degree of sophistication used in the mathematical simulation of the problem under consideration.

Simulation of the Physics

A typical simulation involves the following phenomena (1-9):

Turbulence. Models are classified according to the turbulent flux hypothesis (whether or not turbulent exchange coefficients are introduced) and the number of extra differential equations to be solved. Models of the exchange coefficient type and direct stress specification type have been extended and applied to more complex flow situations, including swirl flows. Currently two-equation energy-length models are to be recommended for application in practical engineering situations; in particular the κ–ε model. The two-equation κ–ε turbulence model is used to calculate the effective viscosity from which the exchange coefficients are calculated:

$$\mu = C_\mu \rho k^2/\varepsilon + \mu_\ell$$
$$\Gamma_\phi = \mu/\sigma_\phi$$

Wall functions are employed to save computing time near wall boundaries.

Chemistry. Often consideration is given to a simplified main exothermic chemical reaction between

just two species, fuel and oxidant, combining directly to form a third, product. Diffusion and premixed flame conditions need to be handled, although most furnace and engine flames may permit the diffusion flame assumptions in their outward appearance. The complex equations representing the route to pollutant formation, techniques for handling 'stiff' kinetics (whereby widely differing reaction rate coefficients require special techniques for handling the source terms), and the effect of turbulence structure on time-mean chemical reaction rates are all topics of strong current interest. Realistic simulation of complex chemistry in turbulent reacting flows is probably **the** area in combustor modeling which will prove to be most useful to study, and the results of which will be most fruitful to apply in practical design situations.

Generally, in an initial computer simulation, a one-step reaction scheme is used via

$$C_xH_y + (x + \frac{y}{4})(0_2 + n\,N_2)$$

$$\rightarrow x\,CO_2 + \frac{y}{2}\,H_2o + n\left(x + \frac{y}{4}\right)N_2$$

or a two-step reaction scheme with equations like

$$C_xH_y + (\frac{x}{2} + \frac{y}{4})\,(O_2 + n\,N_2$$

$$\rightarrow x\,CO + \frac{y}{2}\,H_2O + n\,(\frac{x}{2} + \frac{y}{4})\,N_2$$

$$CO + \frac{1}{2}\,O_2 \rightarrow CO_2$$

In the latter model, oxidation of the hydrocarbon to carbon monoxide is the first step while the oxidation of the latter to carbon dioxide is the second step. More recently, four-step reaction schemes have become available and used in combustor chemistry. Typical equations then are like

$$C_xH_{2x+2} \rightarrow x/2\,C_2H_4 + H_2$$
$$C_2H_4 + O_2 \rightarrow 2CO + 2H_2$$
$$CO + 1/2\,O_2 \rightarrow CO_2$$
$$H_2 + 1/2\,O_2 \rightarrow H_2O$$

Chemical Reaction Rates. In turbulent flows, the specification of time-mean chemical reaction rates is a problem receiving well-deserved attention. In current engineering practice, fuel and carbon monoxide consumption rates are assumed to be governed by the minimum of time-averaged Arrhenius and eddy-breakup models. These are, respectively,

$$R_{fu} = -\,A\,p^2\,m_{fu}m_{ox}\,\exp\,(-B/RT)$$

$$R_{fu} = -\,C\,\rho g\varepsilon/k$$

where A, B, and C are parameters.

Radiation. The formulation is an 'integro-differential' one, which is especially difficult to solve. The equations may be represented by the 'zone' method or one of the 'flux' methods for 1, 2 or 3 flux sums (so-called two-flux, four-flux and six-flux methods). Although the former is more exact, it is difficult to incorporate with the fluid mechanics. The latter is less rigorous but simple to employ, and is therefore the one to be recommended in many cases. In axisymmetric simulations, a four-flux model of radiation heat transfer is appropriate, with two second-order equations

$$\frac{d}{dx}\,[\Gamma_x\,\frac{dR_x}{dx}] + a(E_B - R_x) + \frac{s}{2}\,(R_r - R_x) = O$$

and

$$\frac{1}{r}\,\frac{d}{dr}\,[r(\Gamma_r\,\frac{dR_r}{dr})] + a(E_B - R_r) + \frac{s}{2}\,(R_x - R_r) = O$$

for the composite flux sums R_x and R_r.

Thermodynamics. Specific heats at constant pressure are often assumed to be given by third-order polynomials in terms of temperature. The density is calculated from an ideal gas equation of state, using appropriate weighted averages to obtain the mean mixture molecular weight.

Multi-Phase Phenomena. Infinite drag assumptions may be made for small particles (solid fuel or liquid droplets) and differential equations solved for the distribution of material in particle-size space, in discrete ranges. Larger particles do not follow the streamlines, and then in addition one has to solve ordinary differential equations for their trajectories. Studies on the rate of burning of droplets, clouds and sprays are proving to be extremely worthwhile.

Nitric Oxide Pollution

The formation of **thermal NO** is often calculated via the Zeldovich mechanism, which is uncoupled from the hydrocarbon-air reaction. A steady state assumption

is made for the calculation of atomic nitrogen, while atomic oxygen is assumed to be in equilibrium with the oxygen molecule. Thus, manipulation of

$$O + N_2 \underset{R_{r1}}{\overset{R_{f1}}{\rightleftharpoons}} NO + N$$

and

$$N + O_2 \underset{R_{r2}}{\overset{R_{f2}}{\rightleftharpoons}} NO + O$$

where R_{f1} and R_{f2} are the forward rates and R_{r1} and R_{r2} are the reverse rates, lead to the rate of reaction of nitric oxide given by

$$d(NO)/dt = R_{f1}[N_2][O] - R_{r1}[NO][N] + R_{r2}[N][O_2] - R_{r2}[NO][O]$$

The transport equation for nitric oxide is similar in form to that given earlier; it need be solved only after the main flowfield has been established.

The **prompt NO** formation rate can exceed the rate produced via the thermal NO mechanism. It can be deduced from equations like:

$$d(NO)/dt = K[O_2]^a[N_2][FUEL]\exp(-E/RT)$$

Nitrogen-containing organic compounds present in liquid and solid fossel fuels can contribute to total NO formed during the combustion process. This fuel nitrogen is a particularly important source of **fuel NO** from residual fuel-oil and coals, which typically contain up to 2 percent nitrogen by weight. For light liquid fuels, expressions like

$$d(NO)/dt = (A[O_2]^a/B[FUEL\ N])^{1/2} \exp[(E_{oxid} - E - E_{red})/RT]$$

are used.

COMPUTER PREDICTION

Classification

Although some very useful O-D and 1-D approaches to characterizing combustor flowfield problems are readily available, research emphasis today is being directed towards 2 -D and 3-D simulations of the phenomena in question. This is necessary in order to utilize present day technology most effectively to meet the demands of current combustor design problems. Such problems entail the solution of many simultaneous nonlinear equations including up to three velocity components, pressure, stagnation enthalpy and species concentrations. Since their equation are all similar in form, the same solution algorithm can be used for all of them. Problems are classified according to their dimensionality (the number of independent variables from three space dimensions and time) and type (parabolic or elliptic). The flow classification of parabolic (possessing one coordinate direction with first- but without second-order derivatives - boundary layer type with prominent direction(s)) or elliptic (possessing second-order derivatives in all coordinate directions - recirculating type with upstram influence) governs the type of boundary conditions required and solution method. Marching methods are appropriate for the former (flows with weak swirl); relaxation methods for the latter (flows with strong swirl). The problems, methods and solutions are discussed in the references (1-7).

Differences Between the Codes

The essential differences between the various available computer codes (and those that are not available) include: the complexity of the equation set for the simulation of the physical processes, the storage requirements, the location of variables in the grid space system, the method of deriving the finite difference equations that are incorporated, and the solution technique. In primitive pressure-velocity variable formulations a staggered grid system is normally used, as recommended by Los Alamos for its special attributes. In computational fluid dynamics the 'best' representation of the convection terms is essential to the accuracy and stability of the iteration scheme or marching procedure. At high cell Reynolds numbers a certain degree of 'upstream differencing' is essential, using upwind differencing, a hybrid formulation or the Los Alamos zip, donor cell, etc. techniques for example. Solution procedures vary from Gauss-Seidel point methods to more efficient line-by-line SIMPLE (semi-implicit method for pressure-linked equations) methods for steady state problems, with corresponding explicit and SIMPLE methods for associated transient problems. Current preference is toward primitive codes, utilizing a staggered grid system, a hybrid formulation of the convective and diffusive terms, and a line-by-line solution scheme. The application of finite element

computational methods, to combustor problems with complex geometric configurations and complicated boundary conditions to apply, is in its infancy; further work in this fertile area will be most useful.

Computerization

2-D Marching Methods. These are useful for axisymmetric 2-D parabolic boundary layer flows, with weak swirl and no recirculation zones. They involve 1-D storage, automatic expanding grid using nondimensionalized stream function y instead of r as the radial coordinate, and implicit solution procedure. Many examples of this type of flow exist in connection with combustion equipment: axisymmetric steady jets, wakes and flames, boundary layers on walls, flows in pipes, diffusers, nozzles, solid-propellant rockets, and after-burner reheat systems. In particular, weakly swirling flows without recirculation are examples of 2-D axisymmetric boundary layer flows.

2-D Relaxation Methods. These methods are useful for axisymmetric 2-D elliptic recirculating flows, with recirculation zones caused by sudden expansions, blockages and/or strong swirl. They involve 2-D storage, stream function-vorticity y-w or primitive-velocity p-u-v formulation, and Gauss-Seidel or line-by-line SIMPLE solution procedure. Most combustion systems exhibit recirculation and they are therefore not amenable to marching integration; instead iterative procedures are essential. Axisymmetric steady flows with recirculation, flame stabilization, rocket-base flows, and swirling flow in a cylindrical chamber are all examples of these types of problems. In particular, strongly swirling flames with recirculation fall into this category.

3-D Marching Methods. 3-D parabolic boundary layer flows, which are nonaxisymmetric and perhaps with weak swirl, require forward marching solution methods. They make use of 2=D storage, primitive formulation, and SIMPLE solution procedure. When a 3-D flow possesses a single predominant direction with no recirculation, the equations become parabolic and have merely a first-order derivative in this main direction. Examples include many phenomena in furnace and process technology, axisymmetric transient reciprocating engines, and gas turbine combustors downstream of the primary zone.

3-D Relaxation Methods. The most complex flow situation requires 3-D relaxation methods of solutions. They are use for 3-D elliptic recirculating flow, which are nonaxisymmetric and perhaps with strong swirl. They make use of 3-D storage, primitive formulation, and SIMPLE solution procedure. These general cases have first- and second-order derivatives in three space directions and relaxation with a 3-D frame is required. If transient as well, they possess additionally a first-order time derivative and require a time-march with a 3-D frame. Most interesting practical combustion chambers, stalled diffusers, elbows, rocket motors, compressor cascades, and automotive reciprocating engines. The computation of 3-D problems concerned with most interesting practical combustion phenomena represents design methods of the future. These problems are now being studied seriously, and further research work in these areas will be most useful.

COMPUTER SOLUTION SCHEMES

Problems abound in the simulation and solution of complex turbulent reacting flows for combustor applications. Areas in which further detailed numerical prediction research will be most useful include (for the nonreacting case) recirculation zone characterization, turbulence simulation in swirling recirculation flow, irregular boundary representation (via analytical or numerical transformation techniques of finite element methods), and further complexities and parameter influences; and (for the reacting case) the simulation of complex chemistry, the turbulence/chemistry/spray interaction problem, and application to realistic three-dimensional problems.

Significant computer simulation obstacles emerge from recent studies especially those related to the Combustion Fundamentals Research and Aerothermal Modeling assessment programs in cooperation with NASA Lewis Research Center. Several authors describe their efforts relating to the development of advanced numerical techniques which can be applied with advantage to turbulent recirculating reacting flowfields. A consensus of results indicates specific needs:

1. Improved finite difference representation (with versions of bounded skew upwind differencing and/or other techniques)
2. Faster convergence techniques via improved numerical solution schemes
3. Improved domain simulation (with boundary fitted coordinate system, or orthogonal grids, etc.)
4. More accurate hot gas heat transfer input
5. Improved turbulence and turbulence/chemistry treatment

There is a need to determine and incorporate new finite difference schemes and/or error reduction techniques into currently-existing computer code models. Improvements in accuracy of representation (differencing schemes) and rapidity of convergence (solution algorithms) are being sought before computer codes can give quantitative, rather than qualitative, predictions. Better numerics, improved understanding of inlet flow, improved turbulence modeling and improved understanding of unsteady problems are required. Techniques for improved accuracy (including several bounded versions of skewed upwind differencing), improved versions of the pressure-velocity coupling technique, and methods for speeding convergence of iterative procedures are needed.

Combustion research is becoming more important with new emphasis on development of alternate energy sources for application to a range of power systems without any adverse effect on the environment. Research in combustion-related areas has expanded significantly in recent years, particularly in area related to fossil fuels. The field of combustion is further diversified by the complex nature of most reaction processes. Fuel chemistry, fluid mechanics, convective and radiative heat transfer, gas-phase elementary reactions, turbulence, and particle kinetics and dynamics are relevant processes that often have a direct, and sometimes controlling influence, on the behavior of a particular combustion system. Recent textbooks (see Refs. 24 through 35) highlight the difficulties in the understanding of turbulent reacting flows.

FLUID DYNAMICS OF COMBUSTION

Complexity of Combustion Processes

The subject of combustion aerodynamics may conveniently be categorized into three areas:

1. **Engineering practice** - for example: gasoline engines, diesel engines, gas turbine engines, rockets, steam boilers, open hearth steel furnaces, blast furnaces, and hot flame cutting equipment.

2. **Mathematical models** - for example: flame propagation, compression ignition, flame stabilization, detonation, spark ignition, solid-fuel bed combustion, laminar and turbulent jets and flames, particle combustion, recirculating reactor and catalytic combustion.

3. **Fundamental sciences** - for example: thermodynamics, fluid mechanics, heat and mass transfer, and chemical kinetics.

These levels are connected via a variety of paths, with the fundamental sciences providing a basis for the mathematical modeling approach with application to engineering practice. Recent trends are influencing engineering practice (pollution control, efficiency and change of fuel type), mathematical models (computer methods, validation and utilization) and fundamental sciences (including chemical kinetics and numerical mathematics).

In **steady-flow** equipment, coal may be burned as lumps on a grate (with application to domestic heating, small industrial boilers, and cupola and blast furnaces) or as powder, suspended in an air stream (as in large industrial boilers and cement kilns). Light fuel oils may be used as vapor, from a heated tube or pot (with application to primus stoves, small aircraft gas turbines and small domestic boilers), as a spray of droplets from a rotating cup (as in aircraft gas turbines). Gas oil can be sprayed from a swirl atomizer (as in industrial gas turbines and larger domestic and industrial boilers), or impelled by steam as a jet of droplets (as in open-hearth furnaces). Rocket propellants in liquid form are sprayed via impingement of liquid jets in large rocket engines and in solid form are burned in perforated blocks at free surfaces in small rocket engines and those with instant readiness. In **unsteady-flow** equipment, gasoline is vaporized by contact with air and hot surfaces in spark-ignition internal combustion engines. Gas oil is sprayed by injection through small orifices in compression-ignition diesel engines.

Combustion

Combustion is typically viewed as the exothermic chemical reaction of a fuel in an oxidant, and three regimes can be distinguished:

1. Slow oxidation **preflame combustion** - occurs throughout extended volume at low temperatures.

2. **Detonative combustion** - combustion shock wave propagates supersonically through the mixture.

3. **Flame combustion** occurs as a fast process with a thin reaction zone which propagates as a combustion wave at flame speed through

the reaction volume [called steady state **deflagration flame**] or occurs in a closed vessel with exponential reaction rate increase and pressure explosion [called **thermal** or **branching chain explosion**].

Most combustion aerodynamic applications are involved with deflagrative flame combustion, in which an increase of volume (and temperature), a decrease of density and a small decrease in pressure occur across the flame front. Two distinct applications can be distinguished:

1. **Heating applications**. Here it is required to transfer heat from the burning gases to boiler tubes, metal ingots, etc. Within reason, high flame radiation is desirable.

2. **Propulsion applications.** The aim is to increase the volume, velocity and kinetic energy of an air stream, in order to provide direct jet propulsion, or drive a turbine. Since gas heating is required, flame radiation is unnecessary, and usually undesirable.

Often flames are formed from gaseous of prevaporized fuels. Furthermore, although a flame can propagate through a static gas mixture, it is usual to stabilize the flame at a fixed point by supplying a continuous flow of combustible mixture. Under these conditions, flames can be divided into two main classes:

1. **Premixed flames** in which the reactants are completely mixed to the molecular level prior to combustion. They are kinetically controlled and the rate of flame propagation, called the burning velocity, is dependent upon chemical composition and rates of chemical reaction. Completely premixed flames are seldom used in practice for safety reasons of, for example, blow out and flashback.

2. **Diffusion flames** in which the reactants mix by diffusion into a thin flame zone, and reaction rates are diffusion controlled. They are preferred in large-scale industrial practice and in gas turbines because safety is increased as the fuel and oxidant are kept separate, as well as providing greater flexibility in controlling flame length and shape and combustion intensity. Fuel and air may be partially premixed, with additional or secondary air supplied through a separate section of the burner.

In both the processes of propagation of the burning zone and the burnout of fuel in the flame, transfer of heat, mass and momentum play important roles. The transfer will be molecular in **laminar flames** and the flow of gases follows streamlines in the flow without turbulent diffusion. The transfer will be by turbulent diffusion in **turbulent flames** and the scale and intensity of turbulence affect burning rates. In practice the need for high combustion intensity or high heat release rates associated with turbulent combustion include: physical structure of turbulent flow, flame fronts, flame generated turbulence, probability density functions, flame propagation and noise generation. The discussion leads naturally to the aerodynamic effect on combustion processes and the strong interaction between them.

Burning Techniques

Fuel and oxidant are admitted into combustion chambers via devices called **burners**. Gaseous fuels can be pumped directly, but liquid and solid fuels require preparation. Liquid fuels are admitted as an atomized spray or cloud of finely dispersed droplets, and pre-heating to reduce viscosity is a common practice. Solid fuels are often pulverized, or they can be burned on grates or in fixed or fluid beds. Solid and liquid fuels involve **heterogeneous combustion**. This process, involving release of combustible gases from the solid or liquid phases, may be superimposed on the general flame zone concepts. Phenomena of interest include: atomization processes, spray characteristics, vaporization rates and combustion. Air is the most common and readily available oxidant, and it is pumped via a fan, blower or compressor. Fuel and oxidant are rarely completely premixed in the burner; they are either injected separately or more often the fuel is mixed with a small proportion of the combustion air only (primary air) on its path through the burner. The splitting of the combustion air into primary and secondary streams is made for reasons of flame stability and safety, such as prevention of flashback and explosion in the fuel supply lines. It also enables higher preheat temperatures to be used in the secondary air which in turn may favorably affect the thermodynamic efficiency of the system.

Staged combustion and associated **stratified charge engines** separate the combustion into two or more distinct regions, usually a first stage where the mixture is fuel-rich followed by a second stage where it is fuel-lean. Typically, there is a prechamber followed

by a main chamber. In each, mixing rates, mean temperature and concentrations of reactants and products are maintained at particular levels. Lower temperatures result, since stoichiometric conditions are avoided, and hence lower oxices of nitrogen production rates are found. Fuel-rich conditions in the first stage are also favorable for reducing nitric oxide levels from high nitrogen-bearing fuels.

Fluid Dynamics

Turbulent jets of fuel and air issuing from burners play a dominant role in mixing processes. These jets interact with transverse jets and recirculation zones and provide flow and mixing patterns, for directing flame zones and heating which in turn determine local air/fuel ratios, flame zones and combustion rates. **Round jets** are most common and occur by fluid issuing from circular cross-section pipes and nozzles. Even at low flow rates and small burner diameters, the jet flow soon becomes turbulent. In practice, most burners have sizes and velocities which give rise to turbulent conditions at the exit. **Annular jets** frequently surround primary fuel round jets or oil guns for secondary air delivery. Sometimes bluff bodies are placed centrally in nozzles, so forming an annular flow with central recirculation zone which encourage flame stabilization. The combination of a round jet and surrounding annular jet is called a **double concentric jet**. Further downstream the combined mass flow rates and jet momenta characterize the coalesced flow, but near the burner the size and geometry of the separation interface strongly influences mixing, with pronounced effects on flame stability.

Flame stabilizing recirculation zones may also be provoked by strong adverse pressure gradients caused by spiraling motion being given to a round jet flow, so forming a **swirling jet**. The swirl velocity component (also known as tangential or azimuthal velocity component) may be imparted via the use of swirl vanes, an axial-plus-tangential entry swirl generator or direct tangential entry into the combustion chamber. The swirl strength has a large scale effect on a flowfield: jet growth, entrainment and decay (for inert jets) and flame size, shape, stability and combustion intensity (for reacting flows). In particular, higher mixing rates, higher turbulence intensities and higher combustion intensities result. The degree of swirl also offers an effective control of the proportion of nozzle fluid mass recirculated and hence chamber residence time distribution. Then good approximate calculations of combustion performance can be made, and it is extremely satisfying to be able to optimize combustion performance via adjustment of swirl strength and resulting residence time distribution. A recent text (9) provides extensive details about the many aspects of complex swirl flow phenomena.

Throttling entrainment to a turbulent jet by confinement in a chamber results in a **confined jet** with associated recirculation zone(s), outside the jet stream. Jets penetrating into a main stream flow at some angle are called **transverse jets**. They have frequent application as secondary and dilution air injection into, for example, gas turbine combustor flames. Usually the prediction of their parameters of interest for design purposes [the jet path, its penetration into and mixing with the main stream] proceeds via a semi-empirical approach. More recently, however, direct measurement and prediction of this and other fluid dynamic phenomena in combustion is possible.

PRACTICAL APPLICATIONS

The Gasoline Engine

Here the combustion system must give certain ignition by spark, reduce heat transfer, and burn fuel completely under all conditions. Demands for efficiency led to high compression ratios and the process of 'knock' - an uncontrolled ignition of the gaseous mixture in the cylinder giving rise to excessive heat transfer, noise, and damage to the engine. Design changes and lead-based fuel additives were introduced to eliminate this unwanted process, but today unleaded fuel is preferred for pollutant reduction reasons. A schematic of the piston-cylinder assembly and its working cycle with constant volume combustion appears in Fig. 1.

Experiment and theory are required to help the designer to determine the influence of boundary shape, location of spark plug and spark energy, fuel properties and wall temperature on ignition behavior, pressure volume time (indicator diagram) variations, tendency to 'knock' and the final gas composition. Past, present and future of the gasoline engine and pollutant emission problems and solutions are discussed in Refs. 36 and 37.

Stratified charge engines SCEs include both **swirl** and **squish** motions and address two problems simultaneously - pollutant reduction and efficiency. Internal combustion IC engines of this type are illustrated schematically in Fig. 2 where a cylinder and piston (equipped with a 'cup' so as to produce squish) are drawn. The arrangement is such that the fuel/air ratio FAR in the vicinity of the spark plug is much richer

than elsewhere in the combustion chamber. Combustion is 'soft' with air remote from the spark plug acting like a cushion. Operation is possible with overall FAR well below the operating limit (set by ignitability considerations) for conventional engines, and this leanness feature makes for economy. Further, power is controlled entirely by the rate of fuel flow, and not the wasteful throttling technique of conventional engines where the engine works against itself. The SCE runs always at 'full throttle' with fuel flow limitation controlling the action. High pressure encourages evaporation of the fuel which is directly injected into the cylinder head. Swirling air mixes with fuel and carries the mixture past the spark plug. The burning region is localised, and comprises a rich mixture with good ignitability in an overall lean mixture. Some piston heads are 'cupped' as shown, so forcing the flow inward during the final stages of the compression stroke, a phenomenon known as 'squish'. Further work (36) describes at length the past, present and future of gasoline engine combustion, including discussion of swirl and squish air motions and their effect in combustion chamber design. Discussion includes the Ricardo 'bathtub' chamber, the Heron 'bowl-in-piston' chamber and May high compression high-turbulence chamber designs. The SCE design possibilities are interpreted in terms of swirl, squish and vortices for the Ricardo spark-ignited comet, the Honda CVCC, the MAN-FM and the Ford PROCO systems. Applications of SCEs to pollutant formation and control in spark-ignition engines are thoroughly covered by Heywood (37), including open chamber (Ford PROCO and Texaco TCCS, for example) and divided chamber (Honda small pre-chamber and other two-chamber concepts, for example) systems.

The Diesel System

High compression must provide smooth ignition, use all available oxygen, reduce heat transfer, reduce pumping power, and emit little smoke. As compared with the gasoline engine, the compression ratio of the diesel engine has to be high so as to ignite the fuel spontaneously, as there is no spark in the engine, and combustion level is controlled by the rate of spray injection of the liquid fuel droplets. Maximization of the power of the engine by using up all the available air tends to yield excessive smoke, an unwanted pollutant. Recent advances in rotary (Wankel) and stratified charge engines SCEs have been stimulated through desire for efficient clean combustion.

In the four stroke diesel engine, the chemical energy of the fuel is partially transformed into mechanical work in four phases, in a manner similar to the spark-ignition engine but now there is no spark plug - combustion is initiated automatically via high compression with constant pressure combustion following.

Now high compression must provide smooth ignition, use all available oxygen, reduce heat transfer, reduce pumping power, and emit little smoke. Inlet flow is encouraged to possess a **swirl motion** about the central axis of the cylinder and the bowl-in-piston (or cup-in-piston) arrangement gives a phenomenon known as **squish** as the piston nears the top of the cylinder. Then the radial extent of the volume of swirling flow is suddenly restricted, and conservation of swirl momentum principles leads to dramatic increase in the swirl velocity, so increasing turbulence and mixing levels. Researchers desire knowledge about the influences of chamber boundary shape, inlet air movement, fuel spray injector characteristics and fuel properties on ignition delay, pressure volume time variations, heat transfer to the piston and smoke production. The application of **swirl and squish** to air motion in diesel combustion is included in the review and prospects given recently by Shahed et al (40). These concepts are also used in stratified charge engines SCEs of the gasoline variety.

Consider now what theory may contribute in the optimization of design and development. Increasing demands for both thermal efficiency and lower pollutant output provide incentive for better methods of analyzing the aerothermodynamics in internal combustion IC engines. The most general approach is to compute as a function of three-space coordinates and time the complete flowfield between the top of the cylinder and the face of the piston throughout the complete four-stroke cycle - intake, compression, power and exhaust strokes - with the intake and exhaust valves opening and closing appropriately. In the gasoline engine, spark ignition initiates the combustion of the compressed gaseous mixture at the beginning of the power stroke; in the diesel engine, on the other hand, ignition of the fuel droplet spray is brought about via the high compression achieved on the compression stroke, and modeling is then a more difficult task. In both cases, it is a major effort to apply computational fluid dynamics in order to analyze and understand the complex flowfield patterns in reciprocating engines, and hence aid in their design and development.

Until recently most models of IC engines were basically thermodynamic models - the combustion chamber was considered as a control volume, fluid dynamic motion was neglected and energy release rate

specified. Many such successful applications have been made. However, interest in more realistic approaches is essential in understanding and solving current problems in, for example, stratified charge engines SCEs, and development of spatial models are necessary.

Furnaces

Flame control is especially important in providing specified distributions of radiant and convective heat transfer, complete combustion, freedom from noise and oscillation, and insensitivity to fuel changes. Figure 3 illustrates four ways in which coal may be burned in industrial furnaces. In furnace design, a multitude of practical configurations are involved, and typical problems and requirements are distinctly opposite to those of engine designers. For example, smoke is needed to generate large radiant heat fluxes, but it is desirable to consume it all before the gases leave the furnace. Heat transfer rates must be high and fluxes must be distributed in an optimum manner. Yet overheating is to be avoided in both the material and the furnace roof.

Many different types of furnaces exit - the power-station boiler furnace is somewhat different from the furnaces of the metallurgical and process industries, for example. The furnace takes on a role of central importance in modern society and its efficiency and pollution characteristics have far reaching consequences. In all cases, though, flame control is especially important in providing specified distributions of radiant and convective heat transfer, complete combustion, freedom from noise and oscillation, and insensitivity to fuel changes. Most furnaces flames are given a degree of **swirl** for stability purposes, while others, for example the tangentially-fired boiler, have inlet streams which are directed so as to aim tangentially at the fireball that results in the center of the chamber. Then a weak **cyclone**-type effect of the swirl chamber or cyclone chamber results - a swirling motion about the geometric axis of the equipment. Important end-products of the process are temperature, heat-flux distribution to the walls and combustion efficiency, and these are intimately connected with production of pollutants, like soot and oxides of nitrogen. The designer and operator would like to know how these depend on fuel-jet momentum and angle, temperature of preheated air and the shape of the chamber. Needless to say, the simulation problem becomes quite complex, involving the interaction of turbulent combustion of many chemical species, with two-phase processes (liquid or solid fuel and carbon particles throughout the flowfield) and radiative heat transfer. As detailed elsewhere, modeling involves to some extent: particle-size distributions (calculated in finite-size ranges at all points of the domain), flux or zone models of radiation heat transfer, and soot distribution studies (soot being formed by thermal decomposition of hydrocarbon molecules and consumed by oxidation, both of which are complex chemical-kineteic process). Reviews of progress in this area are available, and the work of the International Flame Research Foundation, Ijmuiden, Holland and the associated American Flame Research Committee is to noted (40,41).

The Gas Turbine

The cycle for gas turbine combustion (the Brayton cycle) is similar to that of the reciprocating four stroke internal combustion engine, see Fig. 1, except that continuous rather than intermittent burning is involved and the combustion takes place at **constant pressure** rather than at constant volume. Figure 4 illustrates the gas turbine turbojet engine. The cycles of both are made up of four strokes: the charging, compressing, combusting and exhausting strokes. In the reciprocating engine the four strokes take place successively in the same cylinder, whereas in the gas turbine they take place simultaneously in different parts of the engine, that is: the compressor (with charging system), the combustion chamber, the turbine (with expansion), and the exhaust system. The continuous smooth steady state rotary motion of the gas turbine led to its wide use in stationary and mobile power plants, most noticeably in aircraft applications, in the form of the turbojet (pure jet), turboprop (most work going to the propeller) and turbofan (some work going to a large fan with 'by-pass' facility). The gas turbine produces, among other things, smoke and industrial and automotive application makes all these pollutants even less tolerable than aircraft applications.

Its combustion chamber performs an essential task - high intensity combustion - and designers strive to reduce its length without making the flame too easily extinguishable, and to reduce its pressure drop without worsening the degree of mixing in the gases which exhaust via the turbine. Experimental 'trial and error' (or so-called 'cut and try' or 'cut and weld') methods are used for optimization of the basic design.

Basic features of a can-type combustor chamber are shown in Fig. 5 (Ref. 43). Although its construction is quite simple, its design and development are haphazard. Details of its operation are quite complex and present knowledge of the internal aerodynamics is very incomplete. Note that although the figure refers to

combustor can flame tube, it may also be thought of as cross-sectional views of annular combustors. It may also represent directly the flame tube of a can-annular system. These systems find their place in high intensity combustion engines, in which the combustor must burn fuel completely, cause little pressure drop, produce gases of nearly uniform temperature, occupy small volume, and maintain stable combustion over a wide range of operating conditions.

The combustor has the difficult task of burning large quantities of fuel, introduced in a highly atomized spray from a specially designed nozzle, with extensive volumes of air, which flows in through an upstream annular **swirler** (a vane pack with swirl angle typically up to 70 deg.). This task must be accomplished subject to certain performance requirements. The high intensity combustion must burn fuel completely, cause little pressure drop, produce gases of nearly uniform temperature, occupy small volume, and maintain stable combustion over a wide range of operating conditions.

Typically, the 18 percent or so of the air stream enters as passing through swirl vanes at an angle of about 70 deg. to the main flow direction. This results in strong 'centrifugal' effects on entry to the combustor and very low pressure in the primary zone, resulting in the formation of a **central toroidal recirculation zone** CTRZ. The central hub of the swirler includes a fuel spray nozzle and a conical swirling spray of liquid kerosene droplets is projected to the CTRZ, resulting in high-intensity burning. Stability is enhanced by the recirculation of hot combustion products, and additional primary zone air entering via lateral injection holes. The designer needs to know how the host of requirements are influenced by the pressure and temperature of the inlet air, the location and size of other holes and film-cooling slots, swirl strength, boundary geometry, fuel spray angle and properties, and many other parameters. A review of recent advances is given in Ref. 24.

Pulsejet Engines

Intermittent combustion is the principle used in the pulsejet engine, of which a schematic is seen in Fig. 6. The duct inlet has a series of inlet valves which are spring-loaded into the open position. Air flows in through the open valves and passes into the combustion chamber where it is heated via the burning of fuel injected into the chamber. The resulting pressure rise causes the valves to close and the hot expanded gases are ejected rearward through the propelling nozzle at high speed providing propulsive force. But the frontal air entry is now closed off, and so as the exhausting gases escape a pressure depression occurs, thus allowing the valves to open and the cycle re-start. Some designs disperse with inlet valves by careful ducting aimed at controlling the changing pressures of the resonating cycle. The pulsejet has not been found suitable for aircraft propulsion because of its low thermal efficiency, high fuel consumption and lack of performance in comparison to gas turbine propulsion. It was, however, the power plant of the V-1 flying bomb during the Second World War (44).

Ramjet and Scramjet Engines

Ramjet combustion offers a high specific impulse (range and speed capability), making it a favored choice for today's light and compact missiles. A schematic of a typical ramjet engine appears in Fig. 7. Its propulsion system is conceptually simple, containing no moving parts but requiring a high operating speed so as to compress the intake air by ram effect, in the intake section [labeled ∞ -1 in the figure]. The air is delivered to a combustion chamber where fuel is injected and burned in the presence of flame stabilizers to provide efficient combustion [section 1-2]. The hot expanded gases exit the engine via a propelling nozzle at high velocities, so producing the forward thrust [section 2-3]. The high initial velocity is usually provided by booster rockets or a launch aircraft. A recent technology has evolved concerning the **intergral rocket-ramjet** IRR concept, where sequential use is made of the ramjet chamber as a solid rocket combustion chamber (during the initial stages of flight) followed by its later use as a ramjet combustion chamber (after a high velocity has been attained and the solid propellant has been burnt). It operates as a completely integrated propulsion system. Initially during the rocket boost, the ramjet fuel is sealed off and the ramjet air inlets are covered with blow-off plugs. When the rocked burns out, the blow-off fairings, inlet plugs and rocket nozzle are ejected, leaving a ramjet propulsion system which is then ignited.

One of the possibilities for powering hypersonic vehicles with an air-breathing engine is the scramjet (or supersonic combustion ramjet) (46). Its basic components are shown in Fig. 8 and consist of air intake, a combustion chamber and a propelling nozzle. Many variants of this geometry are available.

Rocket Engines

Rocket engines do not use atmospheric air as their working fluid, and thus they are able to function outside the earth's atmosphere, if desired. They also provide propulsive force at a vehicle velocity of zero, direct from the launch pad, in contrast to the ramjet which requires a high forward velocity to function. Both liquid and solid-propellant rocket engines are used.

Figure 9 shows the basics of a liquid rocket engine (39). Both fuel and oxidant are carried on board. Typical fuels are hydrogen, kerosene and ethyl alcohol; typical oxidants are oxygen, hydrogen peroxide and fluorine. They are carried in liquid form in tanks and are fed to the combustion chamber via injectors [see section 1-2 of the figure]. Sometimes a pump is used to inject the liquids as shown, but alternatively highly pressurized tanks can provide direct injection. Often the fuel being pumped passes through a double wall construction of nozzle and combustion chamber to provide some degree of cooling for these very high temperature components. In the combustion chamber [section 2-3], the reaction produces high temperature, high pressure and low ensity products of the chemical reaction. The gases expand in the convergent-divergent nozzle [section 3-4] are exhausted at high velocity to the surroundings, so producing propulsive force.

In the solid-propellant rocket engine, the entire charge of solid-propellant grain, in the form of a cartridge, occupies most of the combustion chamber volume. Propellants fall into two main classes known as 'double-based' and 'composite' types. The former is a homogeneous colloidal mixture of, for example, nitrocellulose and an explosive plasticizer, usually nitroglycerine. The latter consists of a heterogeneous structure of particles of an oxidizer [like ammonium nitrate] or lithium perchlorate dispersed through a plastic reducing agent which acts as the fuel. Shown in fig. 10 is a schematic of the solid-propellant rocket engine with its main features. Figure 11 shows typical surface shapes of solid-propellant grain, chosen so that certain burning surface areas and void volume temporal changes may be achieved to be consistent with engine thrust requirements.

CLOSURE

Many combustion systems utilize the strong favorable effects of applying swirl to injected air and fuel, so aiding the stabilization of hihg-intensity combustion processes, and good flowfield characterization is of prime concern. Experimental and computational results show some of the interesting effects of combustor design parameters on subsequent flowfield development and combustor performance. Theoretical and computational experiments can be, should be, and have been performed which complement test cell data describing the internal flowfield characteristics. Theoretically, it is in the area of parameter influences that computer programs show their supremacy in terms of time and cost savings as compared with experimental work. Progress will lead to more realistic and cost-effective practical combustor modeling.

Model experiments designed to highlight specific subproblems and their interactions (and not complex combustor flows) should receive attention for model development and validation. Other areas in which further research will be most useful include: the simulation of complex chemistry, the turbulent-reaction interraction problem, the utilization of complex mesh and/or finite element methods of computation, and application to realistic three-dimensional problems. This, and continued development on the accuracy of the simulation of the physical processes involved, should elevate computer modeling to an established place in practical combustor design and development programs.

REFERENCES

1. Patankar, S.V., and Spalding, D.B., "Mathematical Models of Fluid Flow and Spalding, D.B., "Mathematical Models of Fluid Flow and Heat Transfer in Furnaces: A Review", Journal of the Institute of Fuel, September 1973, pp. 279-283.

2. Spalding, D.B., "Mathematical Models of Turbulent Flames: A Review", Combustion Science and Technology, Vol. 13, 1976, pp. 3-25.

3. Lilley, D.G., "Swirl Flows in Combustion: A Review", AIAA Journal, Vol. 15, August 1977, pp. 2063-1078

4. Edelman, R.B., and Harsha, P.T., "Laminar and Turbulent Gas Dynamics in Combustion - Current Status", Progress in Energy and Combustion Science, Vol. 4, Pergamon Press, 1978, pp. 1-62.

5. Jones, Robert E., "Gas Turbine Engine Emissions -- Problems, Progress and Future", Progress in

Energy and Combustion Science, Vol. 4, Pergamon Press, Ltd., 1978, pp. 73-113.

6. Lilley, D.G., "Flowfield Modeling in Practical Combustors: A Review", Journal of Energy, Vol. 3, July-August 1979, pp. 193-210.

7. McDonald, H., "Combustion Modeling in Two and Three Dimensions -- Some Numerical Considerations", Progress in Energy and Combustion Science, Vol. 5, 1979, pp. 97-122.

8. Khalil, E.E., "Modeling of Furnaces and Combustors", Abacus Press, Tunbridge Wells, England, 1982.

9. Gupta, A.K., Lilley, D.G., and Syred, N., "Swirl Flows", Abacus Press, Tunbridge Wells, England, 1984.

10. Gosman, A.D., and Pun, W.M., "Calculation of Recirculating Flows", Rept. No. HIS/74/12, Dept. of Mechanical engineering, Imperial College, London, England, 1974.

11. Lilley, D.G., and Rhode, D.L., "A Computer Code for Swirling Turblent Axisymmetric Recirculating Flows in Practical Isothermal Combustor Geometries", Report NASA CR-3442, Feb. 1982.

12. Rhode, D.L., Lilley, D.G., and McLaughlin, D.K., "On the Prediction of Swirling Flowfields Found in Axisymmetric Combustor Geometries", ASME Journal of Fluids Engng., Vol. 104, Sept. 1982, pp. 378-384.

13. Lilley, D.G., Rhode, D.L., and Samples, J.W., "Prediction of Swirling Reacting Flow in Ramjet Combustors", Paper AIAA-81-1485, Colorado Springs, CO, July 25-27, 1981.

14. Khalil, E.E., Spalding, D.B., and Whitelaw, J.H., "The Calculation of Local Flow Properties in Two-Dimensional Furnaces", Int. J. Heat Mass Trans., Vol. 18, 1975, pp. 775-791.

15. Novick, A.S., Miles, G.A., and Lilley, D.G., "Numerical Simulation of Combustor Flowfields: A Primitive Variable Design Capability", J. of Energy, Vol. 3, No. 2, March-April 1979, pp. 95-105.

16. Ramos, J.I., "Exhaust Gas Emissions from a Swirl Stabilized Combustor", AIChE Symposium Series, R.P. Stein, ed., Vol. 77, No. 208, 1981, pp. 393-399. See also: Report CO/81/3, Dept. of Mech. Engng., CMU, Pittsburgh, PA, 1981.

17. Samples, J.W. and Lilley, D.G., "Chemically Reacting Axisymmetric Flowfield Prediction", Paper AIAA-84-0364, Reno, NV, Jan. 9-12, 1984.

18. Patankar, S.V., and Spalding, D.B., "A Computer Model for Three-Dimensional Flow in Furnaces", 14th Symp. (int.) on Combustion, The Combustion Inst., Pittsburgh, PA, 1973, pp. 605-614.

19. Serag-Eldin, M.A., and Spalding, D.B., "Computations of Three-Dimensional Gas-Turbine Combustion Chamber Flows", Trans. ASME J. of Eng. for Power, Vol. 101, July 1979, pp. 326-336.

20. Mongia, H.C., and Reynolds, R.S., "Combustor Design Criteria Validation, Vol. III - User's Manual", Report USARTL - 78-55C, U.S. Army Res. and Tech. Lab., Ft. Eustis, VA, Feb. 1979. (See also Vols. I and II).

21. Swithenbank, J., Turan, A., and Felton, P.G., "Three-Dimensional Two-Phase Mathematical Modeling of Gas Turbine Combustors", in Gas Turbine Combustor Design Problems (Lefebvre, A.H., ed.), Hemisphere-McGraw-Hill, New York, 1980, pp. 249-314.

22. Srivatsa, S.K., "Computations of Soot and NO_x Emissions from Gas Turbine Combustors", NASA CR-167930, 1982.

23. Sullivan, R.E., Sutton, R., Miles, G., Young, E., and Briehl, D., "Application of 3-D Aerodynamic/Combustion Model to Combustor Primary Zone Study", Paper AIAA-83-1265, Seattle, WA, June 27-29, 1983.

24. Lefebvre, A.H., "Gas Turbine Combustion", McGraw Hill, 1983.

25. Toong, T.Y., "Combustion Dynamics: Dynamics of Chemically Reacting Fluids", McGraw-Hill, New York, 1983.

26. Gupta, A.K. and Lilley, D.G., "Flowfield Modeling and Diagnostics", Abacus Press, 1985.

27. Williams, F.A., "Combustion Theory", Second Edition, Benjamin Cummings, Menlo Park, CA, 1985.

28. Rosner, D.E., "Transport Processes in Chemically Reacting Flow Systems", Butterworths, Boston, 1986.

29. Kuo, K.K., "Principles of Combustion", Wiley, New York, 1986.

30. Oran, E.S. and Boris, J.P., "Numerical Simulation of Reactive Flow", Elsevier, New York, 1987.

31. Eckbreth, A.C., "Laser Diagnostics for Combustion Temperature and Species", Abacus Press/Gordon and Breach Science Publishers, England, 1988.

32. Chomiak, J., "Combustion: A Study in Theory, Fact and Application", Abacus Press/Gordon & Breach, New York, 1990.

33. Chigier, N.A., "Combustion Measurements", Hemisphere Publishing Corp., 1991.

34. Bartok, W. and Sarofim, A.F. (Eds.), "Fossil Fuel Combustion-A Source Book", Wiley, New York, 1991.

35. Keating, E.L., "Applied Combustion", Marcel Dekker, New York, 1993.

36. Wheeler, R.W., "Gasoline Combustion - Past, Present and Future", Paper D.P. 78/212 presented at CI/CSS Spring Technical Meeting held at Purdue University, W. Lafayette, Indiana, April 3-4, 1978.

37. Heywood, J.D., "Pollutant Formation and Control in Spark-Ignition Engines", Prog. in Energy and Comb. Sci., Vol. 1, 1976, pp. 135-164

38. Campbell, A.S., "Thermodynamic Analysis of Combustion Engines", Wiley, New York, 1979.

39. Stambuleanu, A., "Flame Combustion Processes in Industry", Abacus Press, Tunbridge Wells, England, 1978.

40. Shahed, S.M., Flynn, P.F., and Lyn, W.T., "Diesel Combustion: Review and Prospects", Paper presented at CI/CSS Spring Technical Meeting, held at Purdue University, W. Lafayette, Indiana, April 3-4, 1978.

41. Beer, J.M., "Recent Advances in the Technology of Furnace Flames", J. Inst. Fuel, Vol. 45, July 1972, pp. 370-382.

42. Godridge, A.M., and Read, A.W., "Combustion and Heat Transfer in Large Boiler Furnaces", Prog. in Energy and Combustion Science, Vol. 2, 1976, pp. 83-95.

43. Anon, "The Jet Engine", Rolls Royce, Derby, England, 1972.

44. Lichty, L.C., "Combustion Engine Processes", McGraw-Hill, New York, 1967.

45. McMahon, P.J., "Aircraft Propulsion", Barnes and Noble Books, London A Division of Harper and Row, New York, 1971.

46. Swithenbank, J., "Hypersonic Air-Breathing Propulsion", Prog. in Aero. Sci., Vol. 8 (D. Kuchemann, Ed.), Pergamon Press, Oxford, England, 1966, pp. 229-294.

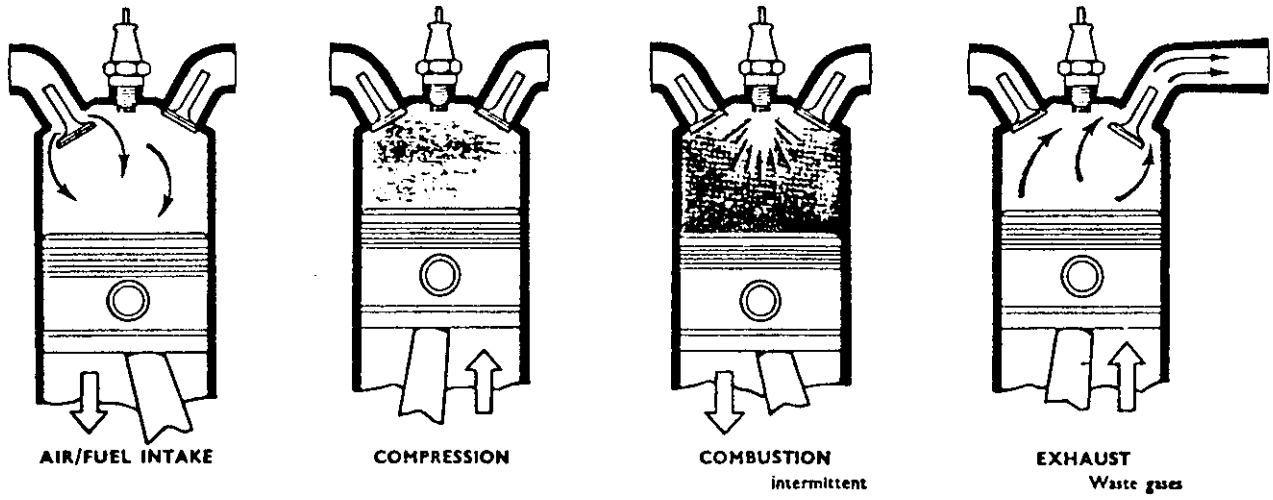

Fig.1. The gasoline engine piston-cylinder assembly and four stroke Otto cycle.

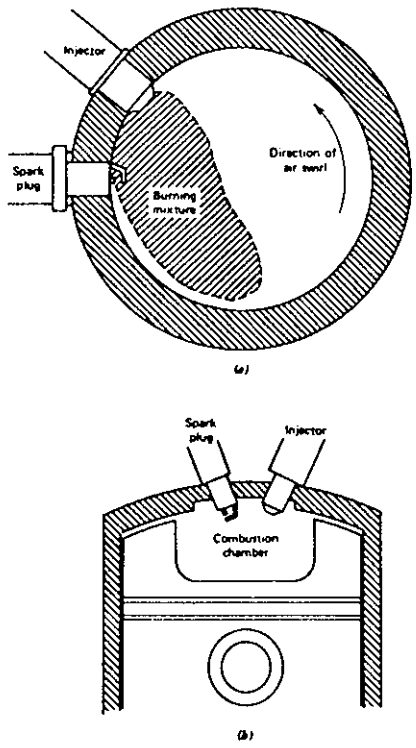

Fig. 2. Stratified charge engine geometry.

(a) Arrangement of swirl injector and spark plug in a stratified charge engine.
(b) Cupped piston in stratified charge engine which produces "squish"[38]

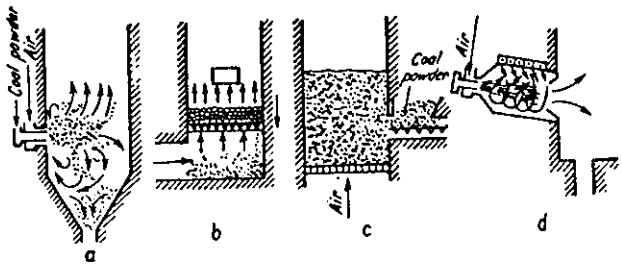

Fig. 3. Coal combustion in industrial furnaces with swirl[39]

(a) as pulverized coal
(b) in a fixed bed
(c) in a fluidized bed
(d) in a cyclone furnace

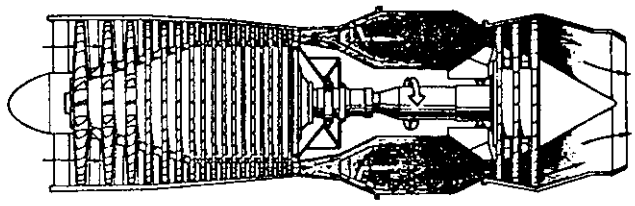

Fig. 4. The gas turbine turbojet engine [43]

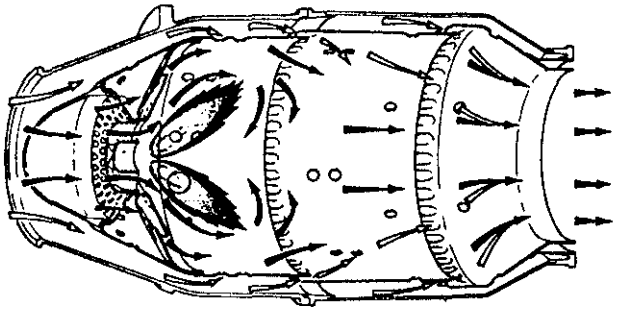

Fig. 5. Schematic of flame stabilization and general flow pattern in a typical axisymmetric can-type combustion chamber of a gas turbine engine [43]

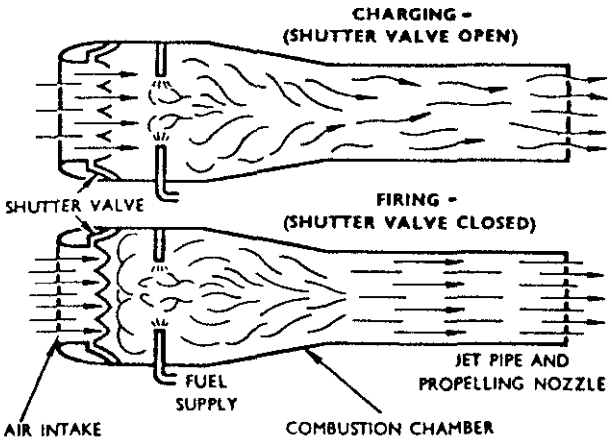

Fig. 6. The pulsejet and its process[44]

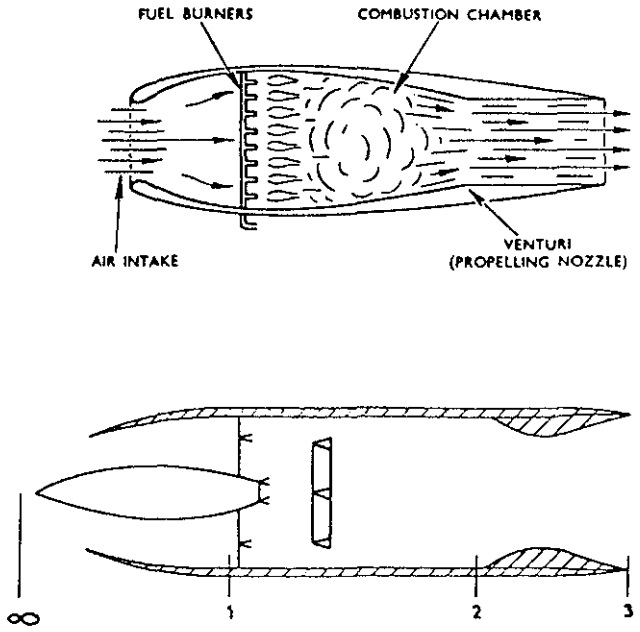

Fig. 7. Schematic of the ramjet engine[45]

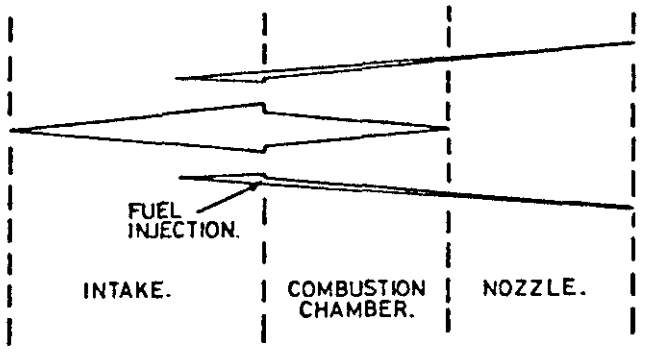

Fig. 8. Schematic of the scramjet engine[46]

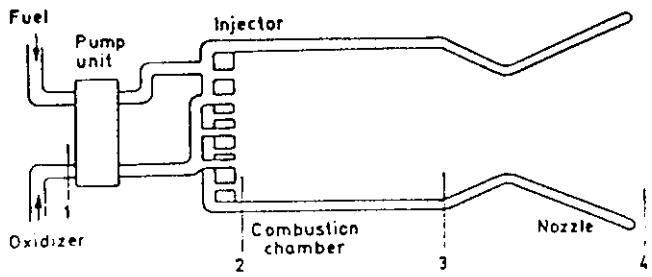

Fig. 9. Schematic of the liquid rocket engine[45]

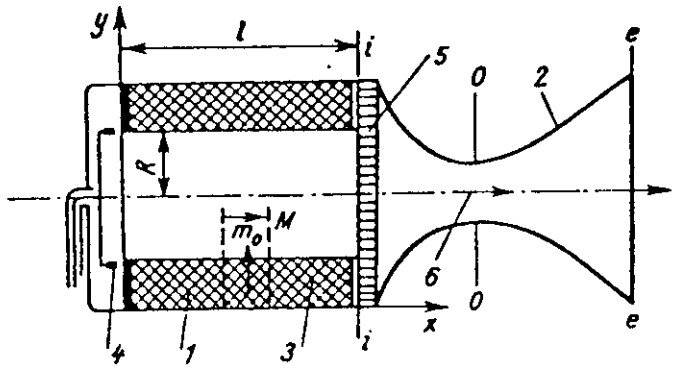

Fig. 10. Schematic of the solid-propellant rocket[39]

1. the engine frame
2. the exhaust nozzle
3. the solid-propellant grain charge
4. the electric ignition device
5. the flow uniformisation grate of the burned gases towards the exhaust nozzle
6. the nozzle throat

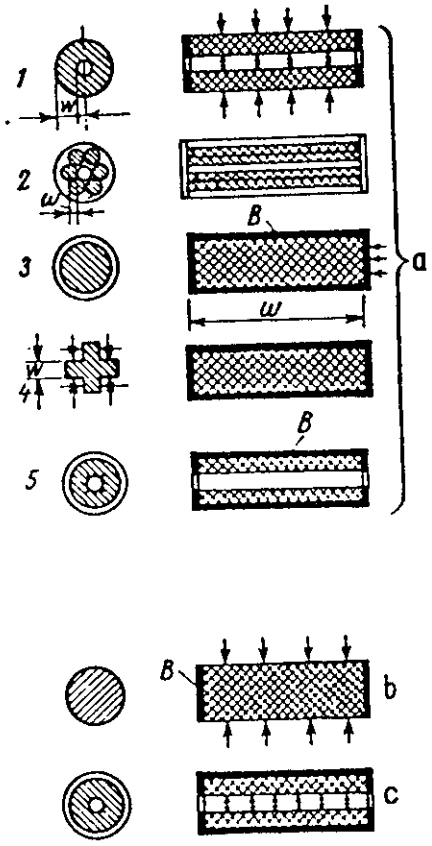

Fig. 11. Typical surface shapes of solid-propellant grain in a rocket engine[39]

(a) for neutral burning
(b) for regressive burning
(c) for progressive burning; B - surface inhibited.