applied sciences

MDPI

Article

Dry-Low Emission Gas Turbine Technology: Recent Trends and Challenges

Mochammad Faqih [1,*], Madiah Binti Omar [1], Rosdiazli Ibrahim [2] and Bahaswan A. A. Omar [2]

[1] Department of Chemical Engineering, Universiti Teknologi PETRONAS, Seri Iskandar 32610, Malaysia
[2] Department of Electrical and Electronics Engineering, Universiti Teknologi PETRONAS, Seri Iskandar 32610, Malaysia
* Correspondence: mochammad_22000035@utp.edu.my

Abstract: Dry-low emission (DLE) is one of the cleanest combustion types used in a gas turbine. DLE gas turbines have become popular due to their ability to reduce emissions by operating in lean-burn operation. However, this technology leads to challenges that sometimes interrupt regular operations. Therefore, this paper extensively reviews the development of the DLE gas turbine and its challenges. Numerous online publications from various databases, including IEEE Xplore, Scopus, and Web of Science, are compiled to describe the evolution of gas turbine technology based on emissions, fuel flexibility, and drawbacks. Various gas turbine models, including physical and black box models, are further discussed in detail. Working principles, fuel staging mechanisms, and advantages of DLE gas turbines followed by common faults that lead to gas turbine tripping are specifically discussed. A detailed evaluation of lean blow-out (LBO) as the major fault is subsequently highlighted, followed by the current methods in LBO prediction. The literature confirms that the DLE gas turbine has the most profitable features against other clean combustion methods. Simulation using Rowen's model significantly imitates the actual behavior of the DLE gas turbine that can be used to develop a control strategy to maintain combustion stability. Lastly, the data-driven LBO prediction method helps minimize the flame's probability of a blow-out.

Keywords: DLE gas turbine; modern gas turbine models; lean blow-out; prediction technique

check for updates

Citation: Faqih, M.; Omar, M.B.; Rosdiazli, I.; Omar, B.A.A. Dry-Low Emission Gas Turbine Technology: Recent Trends and Challenges. *Appl. Sci.* **2022**, *12*, 10922. https://doi.org/10.3390/app122110922

Academic Editor: Satoru Okamoto

Received: 20 September 2022
Accepted: 15 October 2022
Published: 27 October 2022

Publisher's Note: MDPI stays neutral with regard to jurisdictional claims in published maps and institutional affiliations.

Copyright: © 2022 by the authors. Licensee MDPI, Basel, Switzerland. This article is an open access article distributed under the terms and conditions of the Creative Commons Attribution (CC BY) license (https://creativecommons.org/licenses/by/4.0/).

1. Introduction

A gas turbine is commonly used as a prime-mover in energy production, utilizing natural gas as primary energy for greener combustion and emission. There are six primary energies used worldwide, reported by British Petroleum in "BP Statistical Review of World Energy 2020", as depicted in Figure 1. According to the report, oil and coal are the most consumed energies. The percentages, among others, are 31% and 27%, respectively. However, oil and coal are not suitable for long-term use due to the metal, sulfur, nitrogen oxide, and airborne particle emissions that pollute the environment and threaten human health. Researchers are therefore investing in renewable energies for a greener future, but the resources are unstable and isolated, which increases the transmission and distribution cost in power generation. Hence, this study focuses on natural gas and gas turbines as the prime-mover in energy production.

In power generation, 80% of the energy production is produced by the combustion process, which releases emissions due to an incomplete reaction [1]. Hence, many countries are promoting the clean energy goal as a priority in nations' development [2]. For this reason, natural gas is selected as a potential solution to meet energy needs and environmental health. According to [3], natural gas consumption is projected to increase almost everywhere and reach 203 cubic feet in 2040. In Europe, natural gas consumption has rapidly grown in the last decades. As reported by International Energy Agency in 2021, the European Union imported 155 billion m^3 from the Russian Federation, indicating this

country as the largest gas producer and exporter [4]. Similarly, the growth of natural gas consumption in Asia-Pacific countries has inflated since 1990 and is thrice higher than the global gas consumption [5]. For example, China has the highest gas consumption among all Asia-Pacific countries with a rapid growth rate of 6–7% from 2016–2020, as documented in [6]. Therefore, the opportunity to diversify natural gas is enormous and sustainable, especially for industrial and power generation. Further, natural gas consumption increases as more systems are integrated with gas turbines in various applications. The technology is widely applied as the third-largest energy contribution with various advantages. Some advantages include high accessibility, high reliability and the ability to produce fewer emissions in dry-low emission (DLE) mode [7].

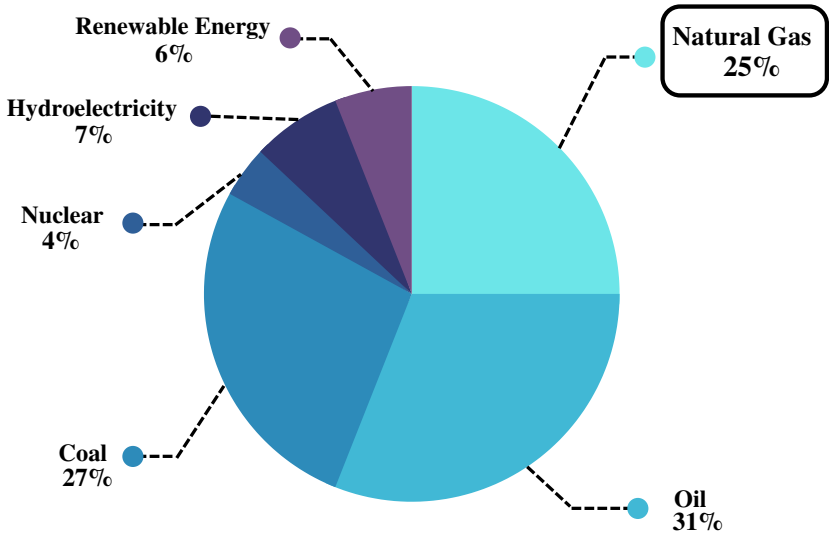

Figure 1. Global primary energy consumption in 2020.

The gas turbine is frequently used as the leading equipment in power plants, aero-engines, marine propulsion, and mechanical drive systems [8]. The gas turbine is intensively worn in power generation due to its high overall efficiencies of approximately 58% in combined cycle arrangement [9]. For the time being, improving gas turbines becomes necessary to achieve better performance and environmental impacts. Therefore, various studies in the gas turbine area have been conducted. In this comprehensive review, a bibliometric analysis is performed to gather publications related to the gas turbine area from 2011 to 2021. The documents contain journals, conferences, and book chapters gathered from several reputable databases such as Scopus, Web of Science (WOS), and IEEE Xplore [10]. The documents were collected using "gas turbine" as the keyword to harvest publications in a broad range. Based on the gathered data, the total published work has increased consistently, showing that the study of a gas turbine is relevant to the current research trend, as illustrated in Figure 2. The studies were primarily conducted to improve a gas turbine's efficiency, operation, and low-emission combustion. Various attempts were proposed to enhance the performance of gas turbines through modeling and prediction techniques. Thus, the search domain is subsequently narrowed down to retrieve publications containing the phrases "gas turbine" or "combustion"; "Fault Detection, Identification, and Isolation (FDII) and prediction"; "dynamic model"; and "condition monitoring" in the title.

Figure 3 shows the total number of studies in percentages for each area of interest. The combustion area dominates the studies, covering almost half of the graph for all databases. Based on the retrieved documents, the discussion mainly lies in developing the technique to reduce the emissions, particularly NOx and CO, which are considered the most dangerous pollutants emitted from the gas turbine combustion process [11]. As the emissions issue from gas turbine combustion is concerned, various combustor technologies have been developed to perform cleaner combustion. DLE is one of the

most used combustors due to its high emission reduction ability and stability. However, since the DLE combustor reduces emissions by lowering the operating temperature, some challenges and problems are faced. The major problem found in DLE gas turbines is the lean blow-out (LBO). LBO is a phenomenon of flame-out in a gas turbine that leads to a tripping problem. Accordingly, the preceding studies investigated the LBO phenomenon to observe the proper preventive actions to solve LBO in DLE gas turbines. Hence, FDII and prediction techniques are extensively developed to minimize the probability of a LBO error. Furthermore, the dynamic models, including physical-based and data-driven, are established to learn and characterize the LBO phenomenon in the gas turbine.

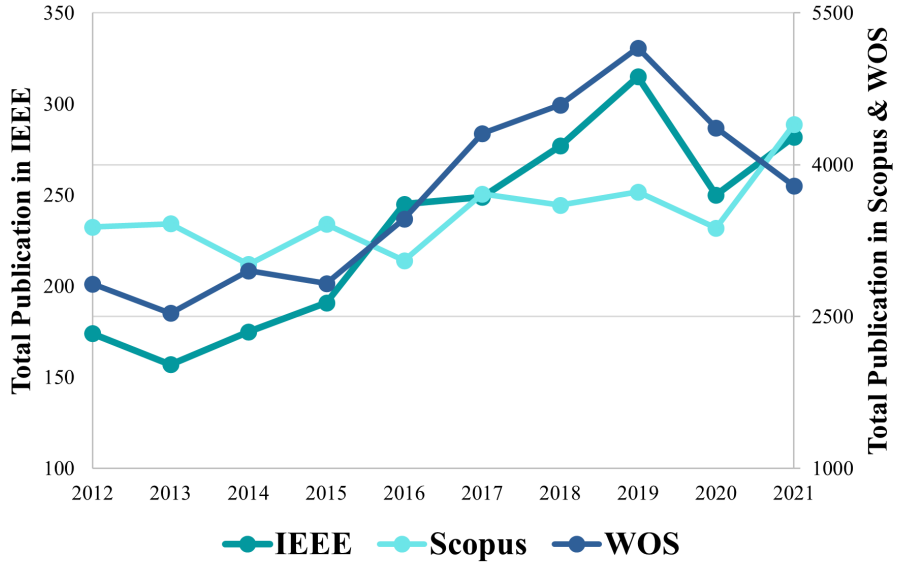

Figure 2. Research produced in gas turbine area from IEEE, Scopus, and WOS Database.

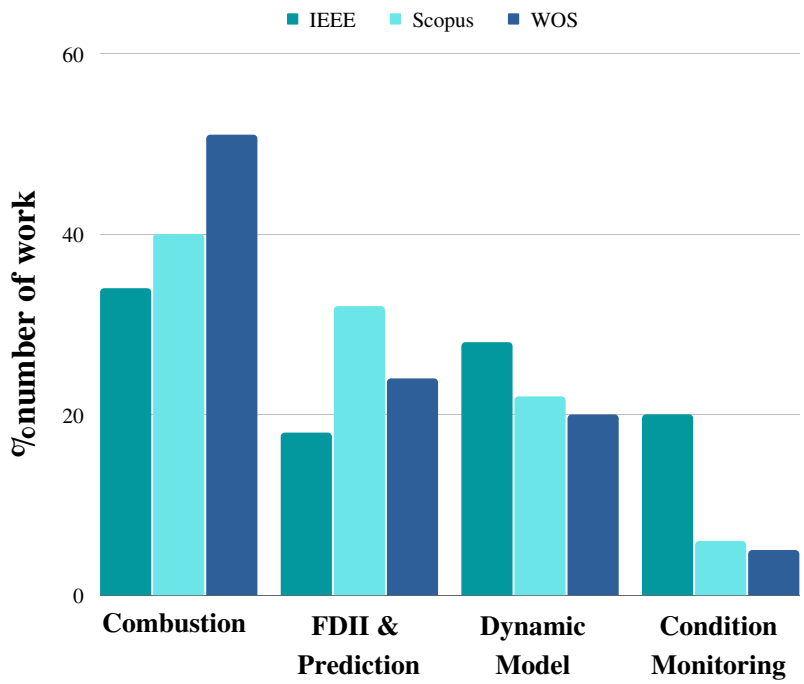

Figure 3. Various fields of work published in Scopus, WOS, and IEEE Database.

This paper aims to provide an overview of the DLE gas turbine as one of the top clean gas turbine technology. The flow of paper organization is represented by Figure 4.

Firstly, the progress of modern gas turbines is described, beginning with single flame combustion as the conventional burner until the latest low NOx burners, which are DLE and NanoSTAR. The gas turbine models, including the physical and black box models, are discussed in detail. The working principle of the DLE burner according to the combustion range and fuel staging followed by common faults are subsequently discussed. The LBO phenomenon is further addressed by evaluating its causes, effects, and behavior. Lastly, various prediction techniques are identified, covering the semi-empirical, numerical, hybrid model, and data-driven methods to predict LBO. This review is expected to be helpful for the gas turbine industry or community and the engineers currently dealing with DLE gas turbine challenges. Furthermore, it can be applied by theorists interested in the gas turbine model and lean-burn combustion. Additionally, some contributions to the gas turbine fields that can be found in this paper are listed as follows:

1. Advantages and drawbacks of various combustors based on the emissions, combustion method, efficiency, fuel, and stability.
2. Comparison of numerous models that can be used to study the dynamics of a gas turbine based on the equation, parameter assumption, and their application.
3. DLE gas turbine working principle covering the allowable operating range and the difference of fuel system configuration with the conventional one.
4. Various combustion challenges in DLE and conventional gas turbine including the causes and the prevention actions.
5. Characteristics of LBO according to emission and firing temperature, and some precursor events.
6. Possible techniques to predict LBO, which can be used to avoid the event and its future implementation.

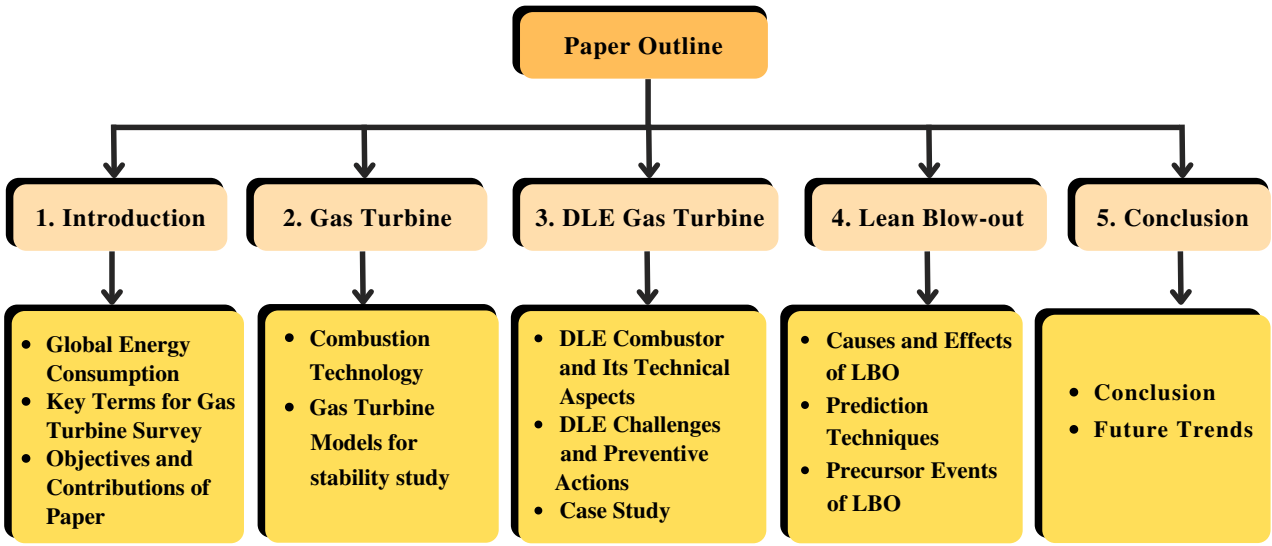

Figure 4. Outline of article.

The paper's remaining sections are organized as follows: the evolution of burner technology and various models to study the dynamics of the gas turbine are described in Section 2. Section 3 delivers the working principle and potential faults in the DLE gas turbine. Subsequently, the discussion of the LBO phenomenon and various LBO prediction techniques are presented in Section 4. Finally, a summary of the discussion is given in Section 5.

2. Gas Turbine

A brief introduction of various combustion technologies used in a gas turbine is contained in this section. The characteristics of each combustor, starting from the conventional

to the latest clean combustor, are extensively explained. Furthermore, numerous models of gas turbine dynamics will be discussed.

2.1. Evolution of Combustion Technology in Modern Gas Turbine

The evolution of the combustion technology in a modern gas turbine is illustrated in Figure 5.

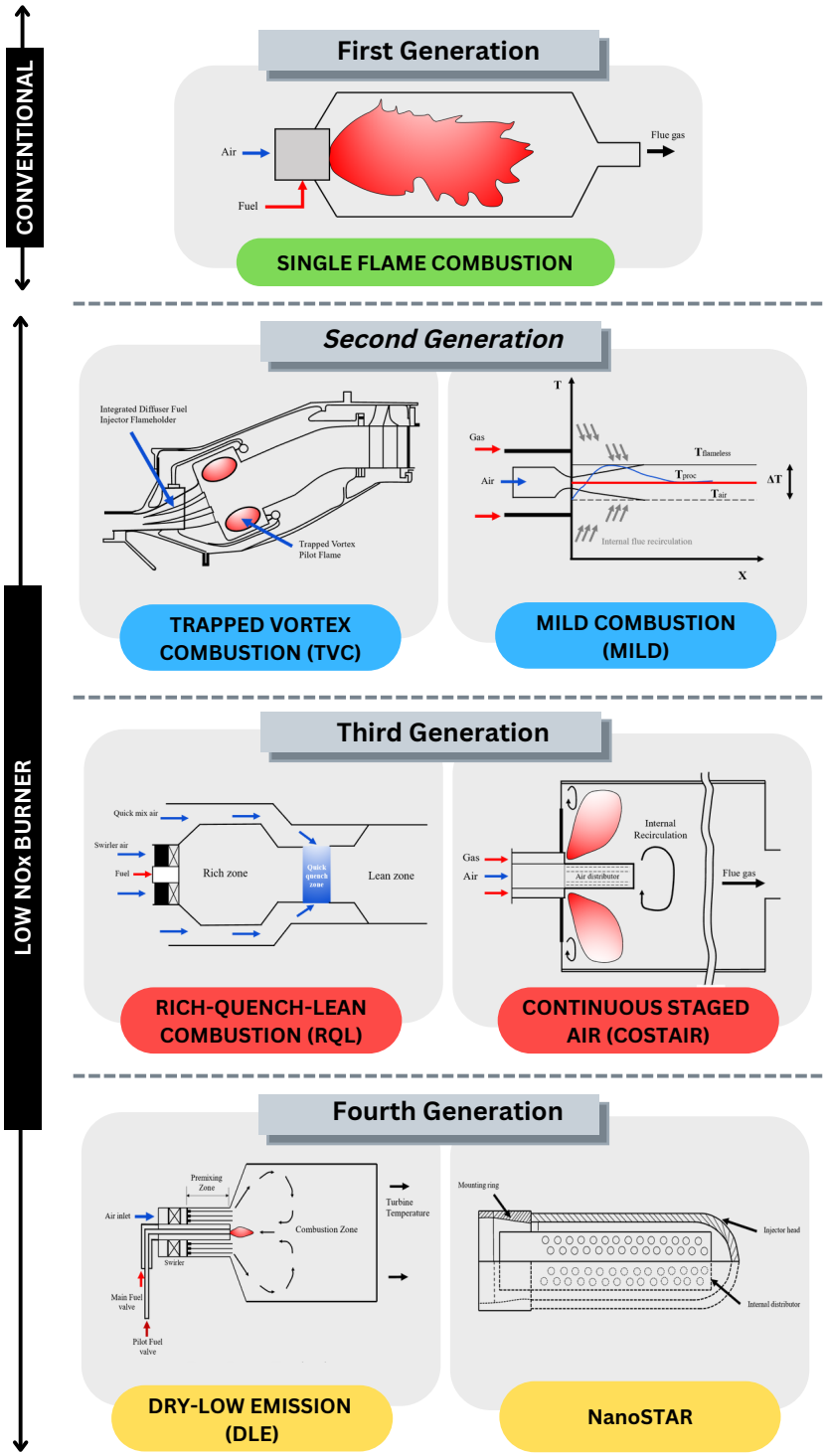

Figure 5. Evolution of gas turbine combustion technology.

2.1.1. Single Flame Combustion

In the first generation, a single flame combustor is utilized for the air and fuel diffusion in the chamber. This diffusional type of combustion is very stable and flexible to any kind of fuel for energy production. However, the high temperature in the primary zone produces a high emission, which is more significant than 70 ppm and becomes a major drawback of the operation. Hence, the trade-off between NOx - CO production and power efficiency has become challenging. Thus, low NOx burner technology to overcome the trade-off limit with an absolute goal to reduce emissions without compromising the power efficiency of the turbine is introduced.

2.1.2. Trapped Vortex and Mild Combustion

The first strategy to overcome the trade-off is optimizing the fuel turbulence to produce stable combustion in the second generation. The system includes trapped vortex combustion (TVC) and mild combustion (MILD) or flameless combustion. TVC's working principle is based on cavity stabilization. The cavity inside the TVC combustor provides a recirculation zone to trap the vortex pilot flame and produces a constant source of ignition at a high rate [12,13]. The continuous ignition or pilot flame offers better mixing inside the cavity that helps to increase the efficiency of the combustion process and reduce greenhouse gas emissions [14]. As reported by Mishra in [15], the technology can achieve from 10 to 40% of NOx emission reduction due to the high inlet velocity for the vortex, which reduces the combustion temperature and improves flame stabilization [16]. The trapped turbulent vortex also provides some significant pressure drop reduction, as reported by Zhang in [17]. The TVC combustor with the most flexibility in fuel operation and application using biofuel is investigated in [18]. Despite the promising performances, the major drawback of the technology is the dependency on the geometric design, especially the cavity area, to attain efficiency. Only proper design and adjustment produce a stable vortex and combustion. Moreover, the continuous firing in the area leads to severe cavitation, further complicating the material selection process [19].

Therefore, the cavitation problem is addressed in the MILD burner. The cavitation area is converted into a constant hot stream of gas to preheat the air before entering the combustor. Then, the hot product gases and the oxygen-rich mixture are formed from the process [20,21]. Therefore, the controlled oxygen-rich mixture oxidizes the fuel in the combustor, producing flameless uniform burning. The biggest advantages of this system are the high combustion flame stability [22,23] and about 90% of NOx emission reduction [24]. Additionally, the system offers high fuel flexibility and low acoustic oscillation for better operation [25]. This technology, however, portrays challenges such as high-pressure loss from the injection nozzle [26], the economic disadvantage of preheating and a relatively high concentration of COx gas from the mild combustion flame. Then, the combustion technology is progressed into the third generation to address previous constraints.

2.1.3. Rich-burn, Quench-Mix, Lean-burn and Continuous Staged Air

The continuous gas stream is upgraded with a quick mix air in rich-burn, quench-mix, lean-burn (RQL), and continuous staged air in COntinuous STaged Air (COSTAIR) in the third generation. In RQL, the higher energetic hydrogen concentration minimizes the production of nitrogen oxides to 72% due to low temperature and low oxygen concentration as reported in [27]. The mixture then travelled to the quick-quench stage to rapidly complete the transition from rich-burn to lean-burn, introducing a large amount of air. The secondary zone, as in the diagram, prevents the NOx production from going through the high route near the stoichiometric ratio. Meanwhile, the mixture is operated according to the equivalence ratio for temperature rise, and all parameters are selected to control other emission gases, such as COx in the lean zone. The excellent advantage of the RQL combustor lies in the fuel flexibility [28], and other criteria for pressure drop and flame stability are still average compared to other technologies [29]. Apart from the noticeably considerable reduction in NOx emission, the RQL system faces hardware complexity due

to the various control strategies to maintain the three zones, especially quick-quench [30]. Without the proper arrangement, the emission of COx may be higher than the conventional gas turbine due to the unburned products from the primary zone.

Therefore, the COSTAIR combustion type is introduced later to overcome the challenges. The combustion chamber consists of a staged air distributor, which flows through the air inlet through numerous openings at three and is continually distributed throughout the chamber in a staged manner. The uniform heat release across the chamber provides cavitation stabilization without the design. Thus, the NOx and COx emission can be achieved up to 2–4 ppm compared to the conventional combustor, which is 70 ppm. Moreover, the combustor's pressure drop is relatively lower than RQL due to the uniform mixing. However, the challenge of maintaining a uniform temperature from the mixing creates flame instability and leads to lean blow-out [31].

2.1.4. Dry-Low Emission and NanoSTAR

In the fourth generation, the DLE gas turbine and NanoSTAR are introduced. The DLE gas turbine combines all the good aspects in the previous combustion system to reduce NOx without increasing the bottleneck COx and unburned hydrocarbon. A DLE gas turbine combustion technology operates a clean operation based on lean pre-mixed (LPM), which adapts the RQL "rich-burn" method and MILD to reduce NOx [32]. As reported in [33], the emission can be reduced up to 97% using this technique. The pilot fuel valve introduction is based on the TVC system as a cavity stabilizer for the flame. The DLE turbine temperature lies in the desired range that is not too low, as this will increase the COx formation, and not too high, as this will increase NOx production [34,35]. The turbine is also flexible in fuel selection, either gas or liquid. The last advanced technology is NanoSTAR. Since all reviewed combustion technologies are based on turbulent flow and non-premixed/premixed, combustion instabilities are inevitable. Thus, the technology utilized the high thermal intensity laminar surface stabilizer from a porous-metal fiber for the injection. The full-scale test of NanoSTAR exhibited high emission reduction, robust ignition and significantly less pressure drop (2–4%) from the system pressure. However, the system is still in the proof-of-concept stage, which is limited to the natural gas application and holds complexity in manufacturing.

The comparison between features of the combustion systems is summarized in Table 1. The factors considered here are the performance of these technologies for emission reduction and power efficiency. The table shows that the three combustion technologies, COSTAIR, NanoSTAR and DLE, share an essential feature of very low COx and NOx emission. However, only NanoSTAR and DLE gas turbines exhibit high power efficiency (significantly less pressure drop), but NanoSTAR is still in the proof-of-concept stages. Thus, the DLE combustion technology selection for this study is justified after considering all the turbine features.

Even though the DLE gas turbine meets emission and pressure drop requirements, it is still susceptible to frequent trips, especially LBO faults, during disturbances. The plant trips release unplanned exhaust gas during faults and further increase the pollutants emission.

Table 1. Summary of combustor technologies in modern gas turbines.

	TVC	RQL	COSTAIR	MILD/Flameless	NanoSTAR	DLE
NOx Emission	Medium (60% reduction)	Low (72% reduction)	Very Low	Low (90% reduction)	Very Low	**Very Low (97% reduction)**
CO Emission	Medium [15]	Medium [27]	Very Low [31]	Medium [24]	Very Low [33]	**Very Low [36]**

Table 1. *Cont.*

	TVC	RQL	COSTAIR	MILD/Flameless	NanoSTAR	DLE
Technology	Recirculation zone introduction to trap turbulence	Three section of front rich burnmiddle quick quenchlast lean burn	Continuously staged air	Oxygen dilution at very high temperature	Introduction of porous metal-fiber mat to stabilize thermal intensity	**Introduction of pilot valve and LPM area for rich-burn**
Pressure Drop	Low [17]	Moderate [29]	Low	Medium	Very Low (2 4% reduction)	**Very Low**
Fuel	Liquid/Gas [18]	Liquid/Gas [28]	Liquid/Gas	Liquid/Gas [25]	Natural Gas	**Liquid/Gas**
Stability	High [16]	Moderate	Low [31]	High [22,23]	Very High	**High**
Drawbacks	Too dependant on geometric design [19]	Increase hardware and complexity [30]	Flame instability to maintain uniform temperature	Economic disadvantage [26]	Design manufacturing and economic value [32]	**Prone to disturbances [20,37]**

2.2. Gas Turbine Model

Numerous works have highlighted and overcome those challenges in DLE gas turbines over the past years. Various studies focus on flame static stability as in [32,38], combustion performance [39,40], fuel injection flexibility [41,42], turbine burner [43], fuel flow aerodynamic [44], fuel combustion [45] and fuel mixing [46]. Upon analysis, most of the works are focused on either combustor design, combustion fuels or the combustion process. Limited studies combine the system as a whole, including the control strategy. Furthermore, most of the works are performed on a laboratory scale only. Therefore, a model that reflects the actual behavior of the DLE gas turbine is needed to represent the dynamic stability of the system.

Thus, this section reviews the existing gas turbine models in power generation for the stability study . This section is divided into two subsections. The first subsection presents the physical model covering gas turbine component design and mathematical model. Then, the review of the black-box model is presented.

2.2.1. Physical Model

The physical model has been applied for the specific mechanical study in gas turbine components (compressor [47], turbines [48], combustors [49]) and thermodynamic behavior as in [50,51]. It implies the application of Brayton cycle thermodynamic laws as in Figure 6. Entropy in the figure is the unavailability of a system's thermal energy for mechanical work conversion. In an irreversible cycle, the air is drawn at point 1 and compressed by the compressor to point 2 at constant entropy (isentropic). Then, the combustor raises the air temperature to point 3 and the heat of combustion, Q_{in}, from the burned fuel is obtained. The compressed air and combustor fuel mixture are expanded to point 4 in the isentropic process. Lastly, the released heat, Q_{out}, from 4 to 1 is utilized to generate power. The process at 2-3 and 4-1 is assumed as isobaric or equal in barometric pressure. These optimal conditions are implemented into differential equations of total mass balance conservation in Equation (1) and conservation energy in Equation (2).

$$\frac{dm}{dt} = \dot{m}_{in} - \dot{m}_{out} \tag{1}$$

$$\frac{dE}{dt} = \dot{m}_{in} i^*_{in} - \dot{m}_{out} i^*_{out} + Q + W \tag{2}$$

where $\dot{m}$ refers to the mass flow and E represents the total energy, i represents the specific enthalpy, Q refers to the heat input into the system, and W is the work produced. The phys-

ical model uses thermodynamic equations, which calculate any process inputs into an output. This method aims for the model to be robust to different sets of data without any modifications. The problem with this method is that the derivation is very extensive and challenging, especially for a larger system. Moreover, mechanical engineering backgrounds are needed in deriving the parameter [52,53]. Thus, the physical model is not heuristic enough to aid the personnel in the decision-making process for the gas turbine operation.

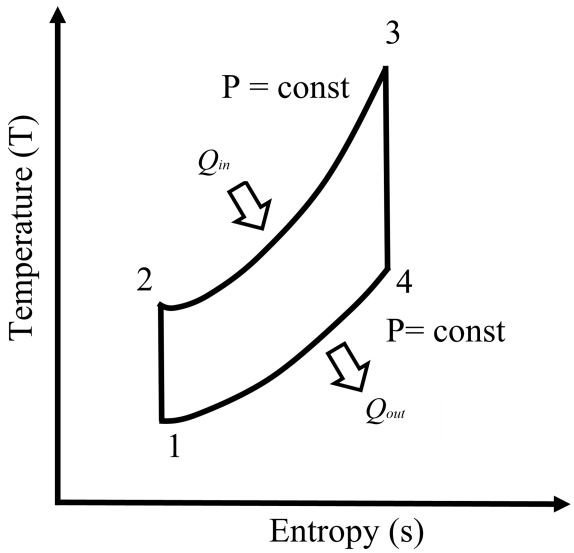

Figure 6. Brayton cycle temperature-entropy diagram.

Rowen's model is the first developed physical model for gas turbine dynamics, as illustrated in Figure 7. The model established by Rowen in [54] is based on the simplified mathematical model to overcome the physical model complexity. A few assumptions were made for the model, which are; (i) the model is for simple cycle, single-shaft, and generator drive only, (ii) the speed of the turbine must be constant and maintained at 97–100%, (iii) the ambient temperature and pressure are at 15 °C and 1 atm, respectively, and (iv) no heat recovery is considered in the model. The input and output signals are generated per unit (p.u), where the operation signal is divided by the rotor speed nominal signal, N, for standardization. However, the temperature signal unit remains.

The model consists of three main control components. The first component is the speed governor. It governs the speed of a system and maneuvers the frequency, exhaust temperature and compressor output as necessary as demanded from the load. The second component is fuel temperature control. It regulates the output temperature, T_M, to be lower than the constant maximum or increased for more energy when the demand increases. The third component is the Inlet Guide Vane (IGV) temperature control, which plays a major role in balancing the temperature by opening or closing the air intake. These three control functions are the inputs for the low-value selection, determining the least fuel control actions for the gas turbine operation. The inputs of the model are the load change and ambient temperature. The outputs are represented by the three function blocks, f_1, f_2 and f_3.

Function block f_1 as in Equation (3) represents the exhaust temperature of the turbine by incorporating the fuel flow, W_f, rated exhaust temperature, T_R, IGV and rotor speed, N. The parameter D and E in the equation is the unknown values, which can be obtained from the operating curves.

$$f_1 = T_R + DW_f + E(1 - N) + 3.5(MaxIGV - IGV) \quad (3)$$

The turbine torque output of the gas turbine with the signals from the fuel flow and the rotor speed is obtained from f_2 as in Equation (4).

$$f_2 = \frac{1.15(W_f - 0.133)}{N} \tag{4}$$

The additional block of f_3 as expressed in Equation (5) represents the exhaust gas flow, which is commonly necessary for the heat recovery stages in the combined cycle.

$$f_3 = N \times L_{igv}{}^{0.257}\left[\frac{288}{T_a + 273}\right] \tag{5}$$

where T_a refers to the ambient temperature, L_{igv} represents the IGV output and N is the rotor speed signal in the model.

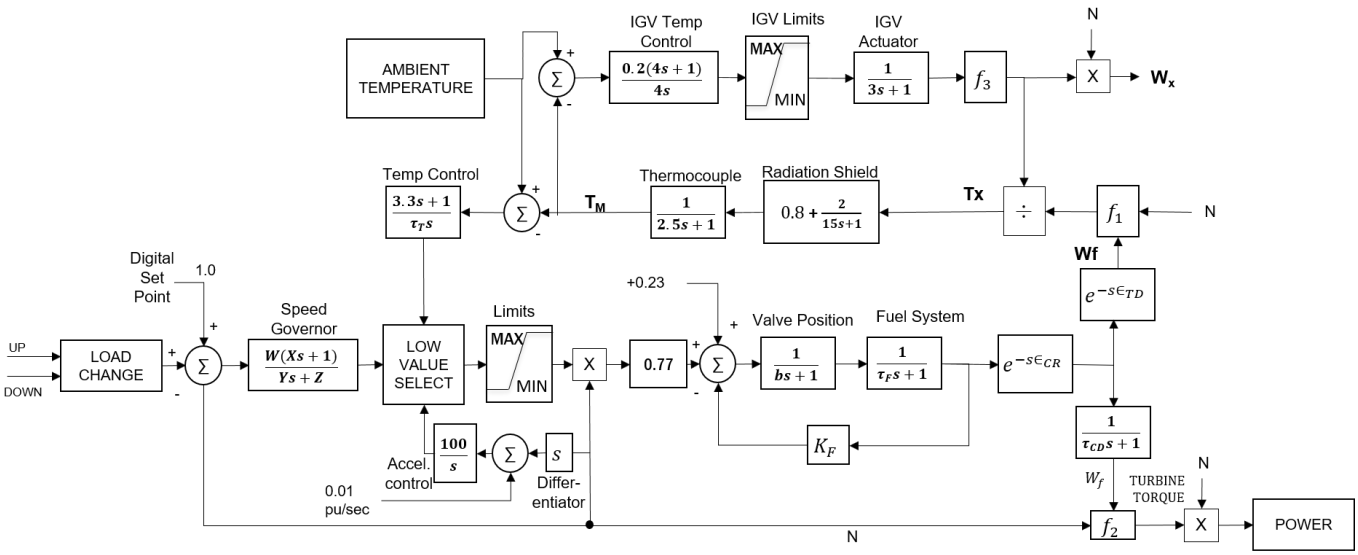

Figure 7. Rowen's gas turbine dynamic model.

The Rowen's model application is further modified by the IEEE task force by splitting the model into the controls of the gas turbine (the airflow control loop, the temperature control loop and the fuel flow control loop) and the thermodynamics equation properties. The main comparison of IEEE to Rowen's model is the torque and speed calculation as in Figure 8 and the control scheme remained the same. A fixed compression ratio in gas turbine operation is assumed in the derivation.

In the structure, A control block is added as a nonlinear function of the thermodynamic properties, which schedules the airflow. The main equation for the model as depicted in the diagrams is expressed in Equation (6). The parameter needs to be solved by the Newton–Raphson method due to the non-linear nature of Equations (7) and (8).

$$T_R = T_f\left[1 - \left(1 - \frac{1}{x}\right)\eta_T\right] \tag{6}$$

where T_R is the reference exhaust temperature, x is the cycle pressure ratio and η_T represents the turbine's efficiency.

$$x = [PR_0 W]^{\frac{\gamma-1}{\gamma}} \tag{7}$$

where PR_0 refers to the design cycle pressure ratio, γ is the ratio of specific heat capacities, w represents the air flow and η_C is the compressor's efficiency.

$$W = \frac{P_G K_0}{T_f(1 - \frac{1}{x})\eta_T - T_i\frac{(x-1)}{\eta_C}} \tag{8}$$

P_G refers to the rated power output, T_i is the inlet temperature of the compressor, and K_0 is the ratio of net power output and inlet heat capacity. The parameter of T_f equals the firing temperature and is expressed in Equation (9).

$$T_f = T_D + \frac{W_f}{W}K_2 = T_a\left(1 + \frac{x-1}{\eta_c}\right) + \frac{W_f}{W}K_2 \tag{9}$$

where T_D is for compressor discharge temperature, K_2 is the design combustor temperature rise, and W_f is the fuel flow.

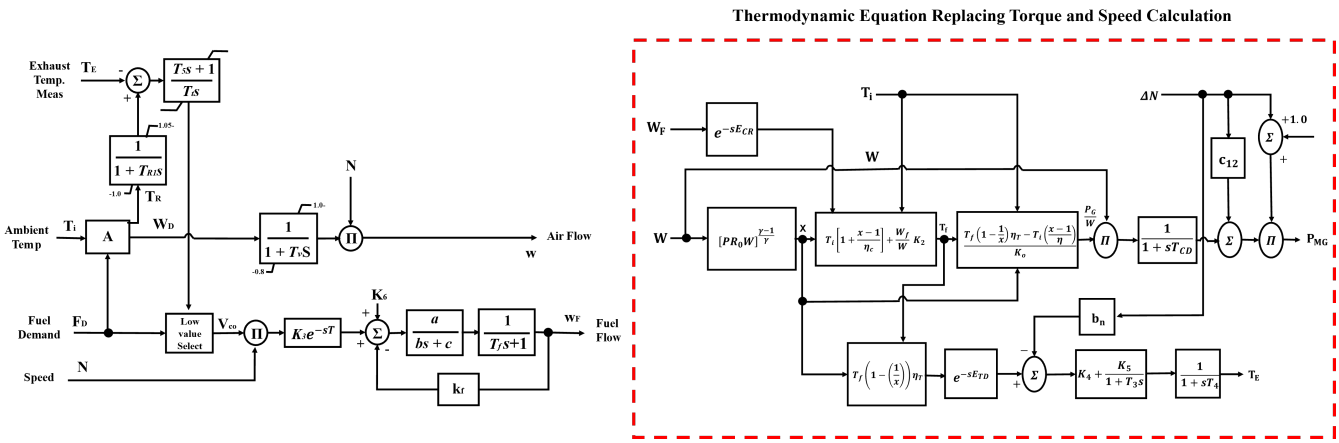

Figure 8. IEEE Gas turbine model for stability studies [55].

The equations and connection of the diagram are based on the isentropic efficiency equations together with the power balance in the physical model [56]. This model is applied to represent both the dynamic and physical models as in [37] for the overall airflow study to cool down the turbine blades. The IEEE model and Rowen's model are commonly compared in power system stability since both models are derived from the nominal conditions provided by the manufacturers. However, the IEEE model equations are relatively complicated and require high computational time, especially for a large system.

A later extension of Rowen's model, aero-derivative, is introduced for the smaller machine ratings in the network connection. The model is derived from the jet engines for two-shaft gas turbines and utilized for better efficiency in part-load operation. As shown in Figure 9, the format of the block diagram is similar to Rowen's model. However, the model is split into two sections; control functions and turbine dynamics. Apart from that, one additional speed signal is introduced, making it two signals instead of one signaling into the low-value selector. First is the speed of the engine (High Power Turbine), which determines the speed of the compressor, and the second signal is the speed of the low power turbine of the generator. From the figure, the turbine characteristics $f_1 - f_4$ follow Rowen's model equation, which is also easily extracted from the operating curves. The extracted parameters include exhaust temperature versus fuel flow, the electrical power versus fuel flow and various other parameters. However, the ultimate model parameters are still obtained through a trial and error approach until the simulated responses are perfectly matched to the actual gas turbine responses.

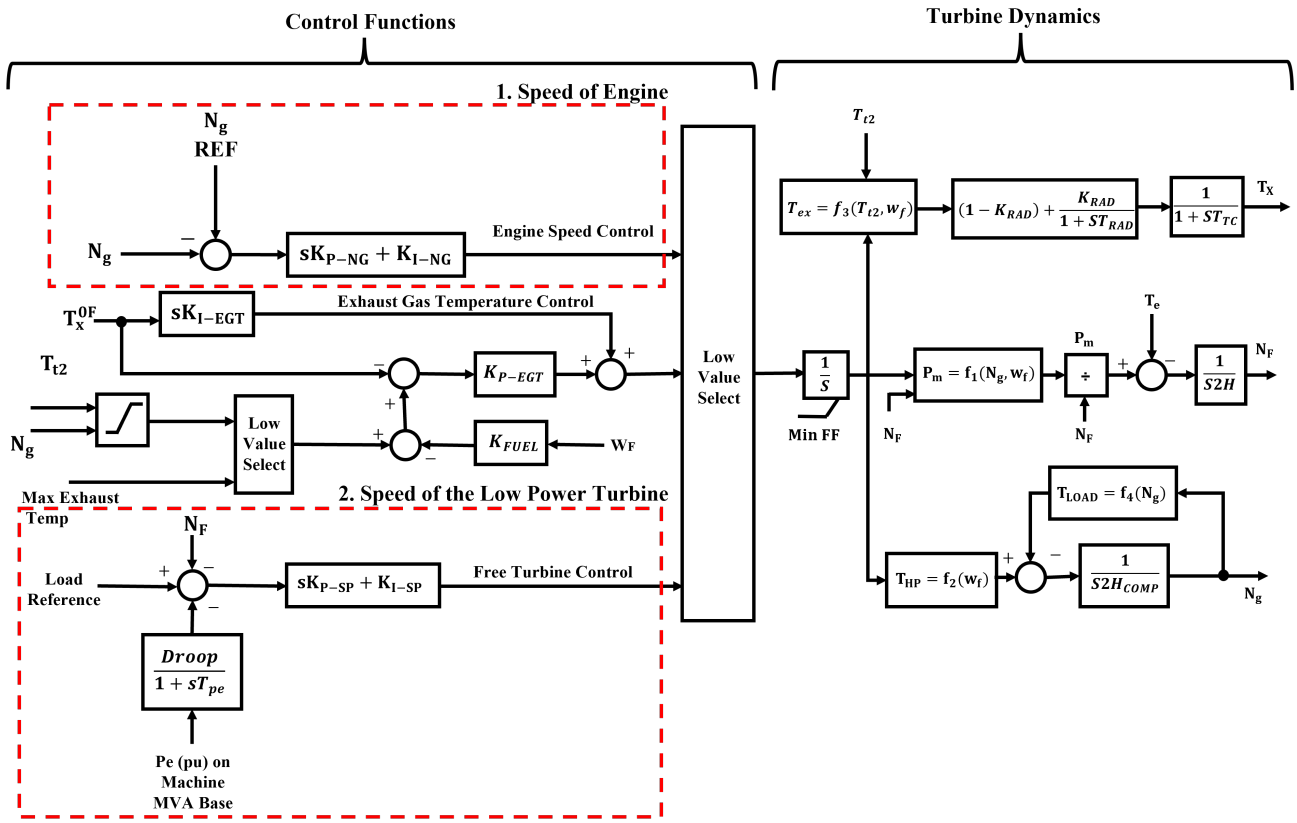

Figure 9. Aero-derivative model [57].

As the utilization of the gas turbine is increased, and higher efficiency in the operation is desirable, the combined cycle power plant is introduced in later studies. However, numerous trips from the combined-cycle generating plants are observed by CIGRE Taskforce, which leads to further investigation into the error. From the analysis, the improper modeling of governor response and exclusion of thermal unit influence in the network are the principal reasons for the trips. Thus, the CIGRE model is introduced as illustrated in Figure 10 for gas and steam turbines in combined-cycle power plants [58]. As with the proposed Rowen's model, three control loops are fed into the low-value selector: speed/load governor, temperature, and acceleration control loop. However, the main differences are the governor transfer function substitution to the additional control loop for MW and the torque calculation represented by the second-order transfer function. The exhaust temperature is not explicitly calculated, but provided via the $F(x)$ function, as shown in the figure. Thus, no derivations are involved in this model. However, the operating curves must determine the constant parameters, and the trial and error approach is still employed. Hence, the model is still prone to error and is time-consuming.

Most of the mentioned models in the previous section are insufficient for evaluating the gas turbine's frequency dependency. Hence, a frequency-dependent model is introduced to clarify the effects of shaft speed and ambient temperature on the power output. Changes in frequency are equivalent to the change in shaft speed, and the airflow fluctuation directly affects the maximum power output. Thus, the phenomenon is studied from the model as shown in Figure 11 for the overall block diagram. The control scheme for the model follows Rowen's model with additional thermodynamic equations to represent the dynamic behavior of the gas turbine. Unlike Rowen's model, where the main calculations are the output power and exhaust temperature, this model includes the compressor pressure ratio in addition to the available outputs. The frequency-dependent model is based on similar equations in the IEEE models. However, as in the IEEE model, the frequency-dependent model assumed a generic form of the pressure ratio dependence on frequency

deviations instead of a fixed compressor ratio with small deviation assumptions. There are nine equations for the models with more than 10 unknowns that need to be extracted from the actual data.

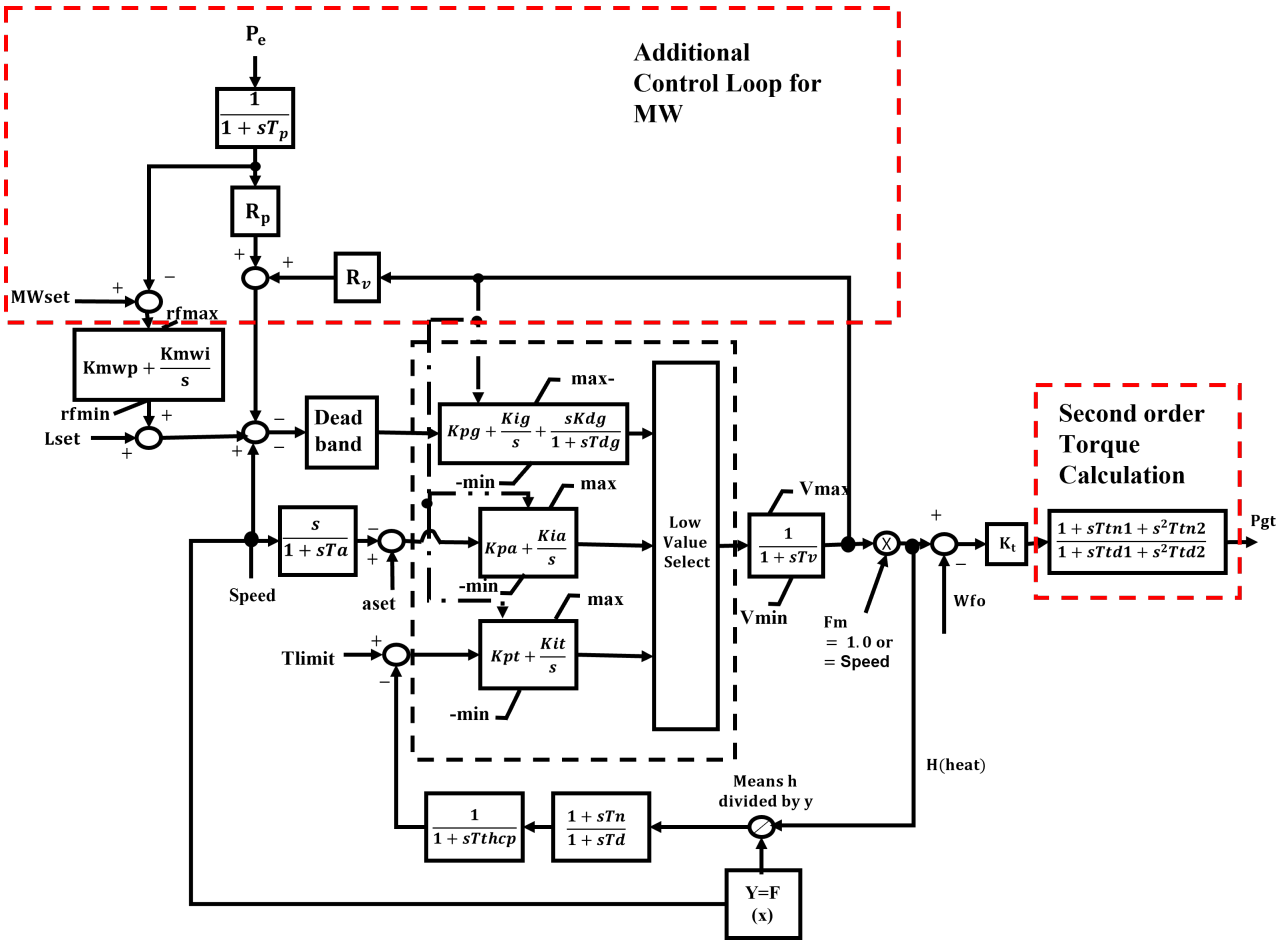

Figure 10. CIGRE model for combine-cycle gas turbine operation [58].

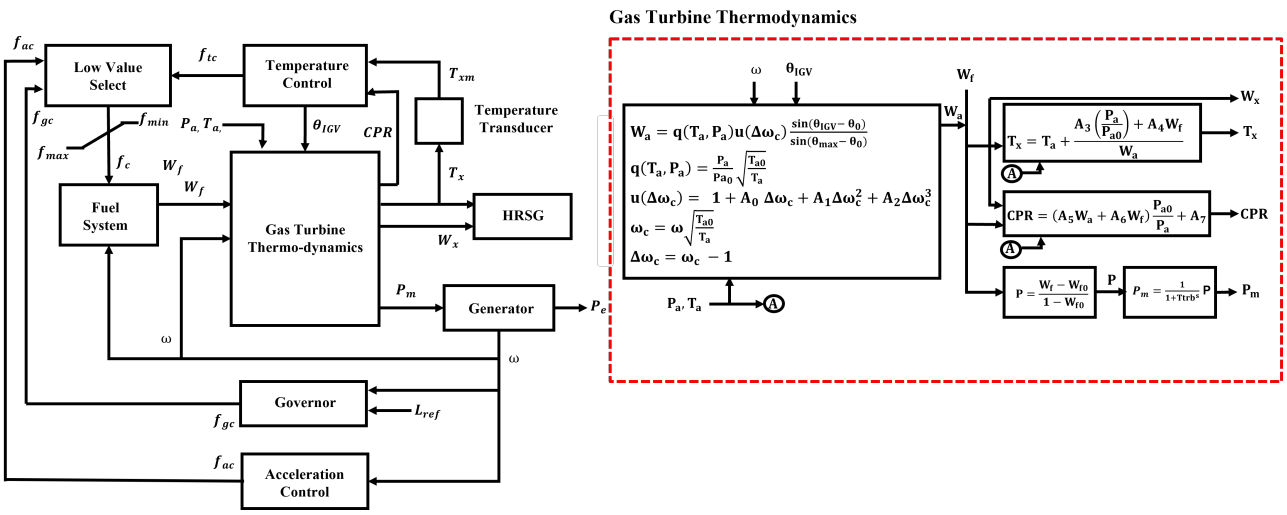

Figure 11. Frequency-dependent model for gas turbine operation [59].

2.2.2. Black-Box Model

Few works are reported utilizing the black-box model in gas turbine modeling. Nevertheless, two studies are reported by Asgari in [60] using Artificial Neural Network and

Non-linear Autoregressive Exogenous (NARX). The NARX structure, as in Figure 12, is applied to model the gas turbine operation. The output signals are compared with the mathematical signals, and the black box and the mathematical model performance are almost identical. However, this area is not favorable since the gas turbine is a complex system, and the black-box method cannot represent the operational dynamics.

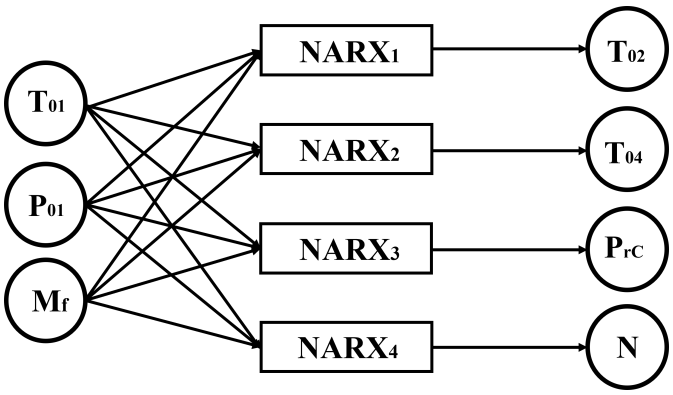

Figure 12. A schematic of NARX structure for gas turbine model [60].

Rowen's model is widely adopted due to the capability to imitate an actual gas turbine operation from the functional derivation of the operating curves [55,61]. It has various applications in the dynamic study and is extensively used in present works. It offers a stable model for gas turbine modification in temperature control and stability, load frequency control [59,62] and PID control [57]. In [63], an integration of Bayesian and Dempster–Shafer theory into Rowen's model serves as a performance monitoring tool for gas turbines. The well-known model also extended into a fault characterization study during frequency excursion. Thus, Rowen's model is widely applied in dynamic studies. Hence, Rowen's model is suitable to be used to represent DLE gas turbine operation. Moreover, Rowen's model only consists of two unknown parameters, which are easily derived compared to other methods as summarized in Table 2. Furthermore, the detail of dynamic models for gas turbine stability study is depicted in Figure 13.

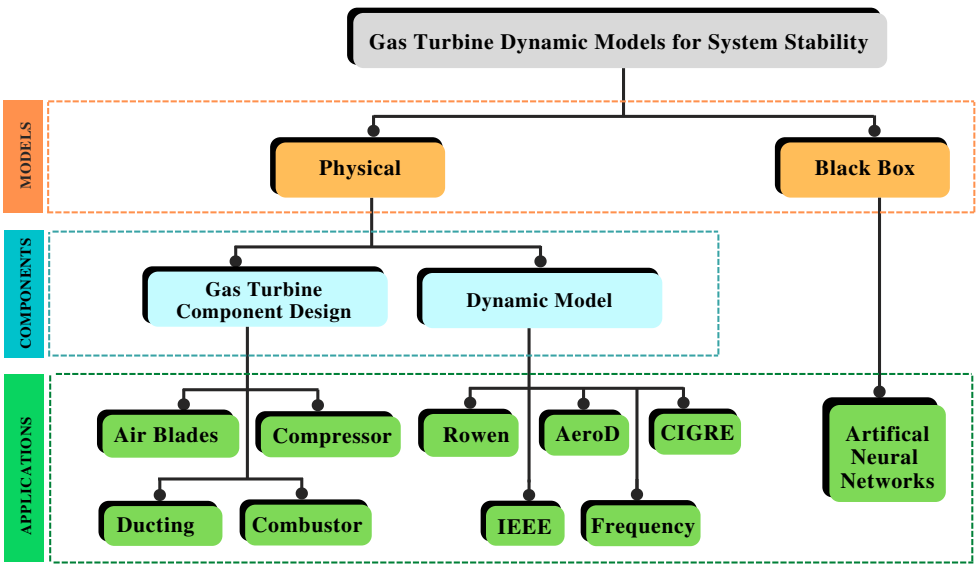

Figure 13. Gas turbine dynamic models for system stability.

Table 2. Summary of gas turbine models.

	Gas Turbine Component Design	Rowen's Model	IEEE Model	Aeroderivative Model	CIGRE Model	Frequency Dependant
Derivation Base	Dynamic and physical thermodynamic properties and laws (Brayton)	Simplified mathematical representation	Rowen's model and thermodynamic equations	Derived from jet engines and Rowen's model	Additional outer loop for MW control.	Frequency dependency on gas turbine
Parameter Assumption	1. Pressure loss is negligible. 2. Compressor and turbine are irreversible. 3. Process 2-3 and 4-1 is isobaric. 4. Process 1-2 and 3-4 is isentropic. 5. Turbine efficiency is linear. 6. Combustor efficiency is assumed to be 1.	1. For simple cycle, single-shaft, generator drive only 2. Constant speed is maintained at 95%-107% 3. Operates at ambient 15oC and 101.325kPa 4. No heat recovery	Fixed compression ratio	Ultimate parameters are based on the trial and error approach until the outputs match the actual turbine responses	Second order transfer function for torque calculation	Generic form of the pressure ratio dependence on frequency deviations
Main Equation	2 main equations with 8 unknowns parameters.	3 main equations with 2 unknowns parameters.	4 main equations with more than 10 unknowns parameters	6 main equations with more than 10 unknowns parameters	All transfer functions. more than 10 unknown parameters	9 main equations with more than 10 unknowns parameters
Application	Components modelling (ducting, compressors, combustors and air blades)	Open cycle, close cycle, combined cycle gas turbine operation	Overall airflow to cool down the turbine blades	Aeroderivative engines, two-shaft engines	Combined cycle power plant, heat recovery unit	Incidents with abnormal frequency behaviour
References	[47–50]	[37,54,56,61,62]	[55]	[57]	[58]	[59]

3. Dry-Low Emission Gas Turbine

In this section, the working principle of the DLE gas turbine is presented along with the details of combustor design. Subsequently, DLE gas turbine problems are evaluated to discover the drawbacks and challenges.

3.1. Dry-Low Emission Gas Turbine Working Principle

The DLE gas turbine has been popular since the 1970s, as the regulation of NOx reduction was tightened. Its working principle follows the Brayton cycle as defined in Section 2.2.1. The combustor performs the heating process in an isobaric condition from point 2, delivering heat to increase the temperature of high-pressure gas until the turbine inlet temperature is at point 3. In the combustion process, emission production is the function of temperature. Therefore, the DLE gas turbine operates at a lower temperature than the conventional one to produce lower emissions. Commonly, a conventional combustion occurs at operating temperature range from 3400 °F (1871 °C) to 3599 °F (1927 °C) [64]. Meanwhile, the DLE gas turbine operates under 2800 °F (1538 °C) to trim the emissions to a single digit of NOx [65]. The combustion can be controlled by adjusting the air and fuel composition, as illustrated in Figure 14.

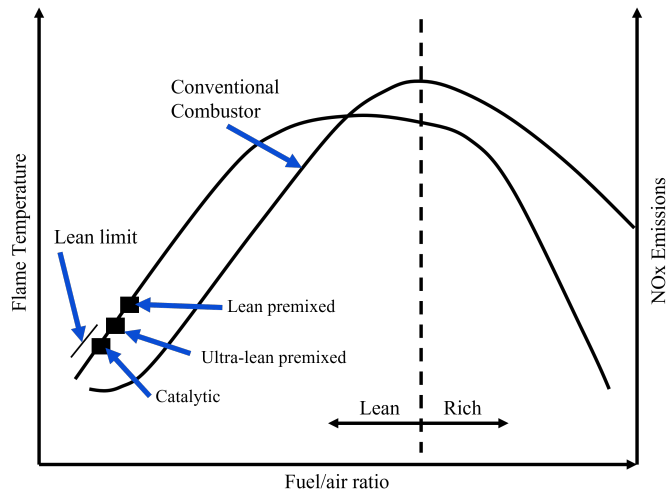

Figure 14. Air/fuel ratio effect to flame temperature and NOx emission.

Refer to Figure 14, DLE gas turbine operates in fuel-lean conditions by implementing the lean-premixed (LPM) technique, mixing the fuel and air at the baseload to produce a lean mixture before entering the combustion chamber. The premixing prevents local "hot spots" that can accelerate a significant formation of the NOx [66,67]. Commonly, the stoichiometric mixture of gas turbine varies between 1.4 and 3.0 [64]. The reason is that when the mixture of air and fuel is below a factor of 1.4, it will produce an intensely hot flame that will rapidly increase NOx formation. In contrast, the combustion becomes unstable when the mixture exceeds 3.0. For this reason, the air supplied is twice higher as the actual air needed to produce a lean condition that can lower the combustion temperature. Hence, the production of thermal NOx can be limited. Even though the DLE gas turbine significantly reduces the NOx, it is difficult to maintain the CO production that increases with the decreasing firing temperature. Therefore, controlling the air and fuel ratio is crucial in DLE application.

The DLE combustor has a different air and fuel system configuration compared to the conventional type, as shown in Figure 15. The main fuel valve injects approximately 97% of the total fuel in the premixing chamber. A pilot fuel valve is added to inject fuel directly into the combustion chamber to maintain stability in rich burn conditions [68]. Therefore, the combustor's size is more prominent because of the additional pilot valve

and the premixing chamber that contains a large quantity of air supplied of approximately 50–60% of the combustion airflow.

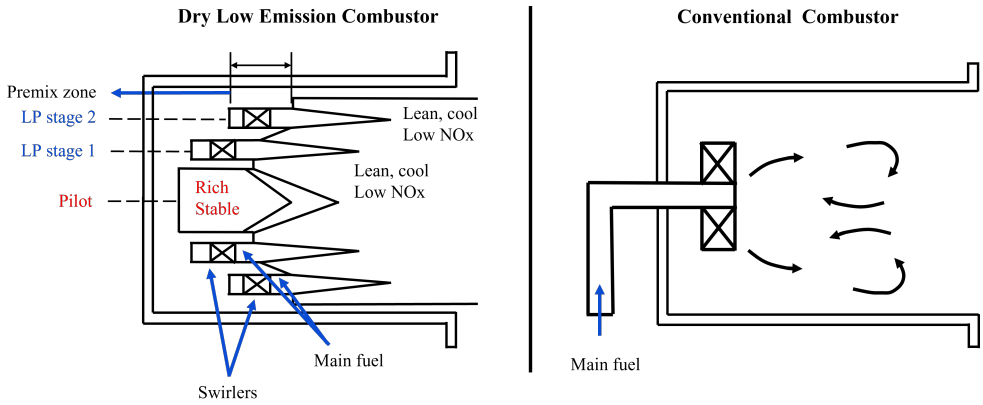

Figure 15. DLE and conventional combustor.

Since the lean-burn operation is adopted in DLE gas turbines, the tendency to flame out is sometimes unavoidable. Therefore, the DLE gas turbine has a specific operating region to maintain healthy operating conditions. The combustion that is too lean will affect the chemical reaction to spend longer than the residence time. Hence, the burner fails to maintain the flame, which leads to LBO occurrence. Avoiding flame extinction can be achieved through the air or fuel staging [69]. Performing air staging can be done by reducing the airflow and decreasing the mixture strength in the combustion chamber to stabilize the combustion. On the other hand, the fuel staging approach can be carried out by axial or radial methods. For the axial approach, the fuel is injected into two zones, utilizing the products from the first combustion zone to be mixed with the air and fuel to the next combustion zone to maintain the lean operation. The use of pilot light or fuel reduction can be implemented for the radial approach. The number of fuel staging depends on the operating range; the common number of the stages used is two or three, as illustrated in Figure 16.

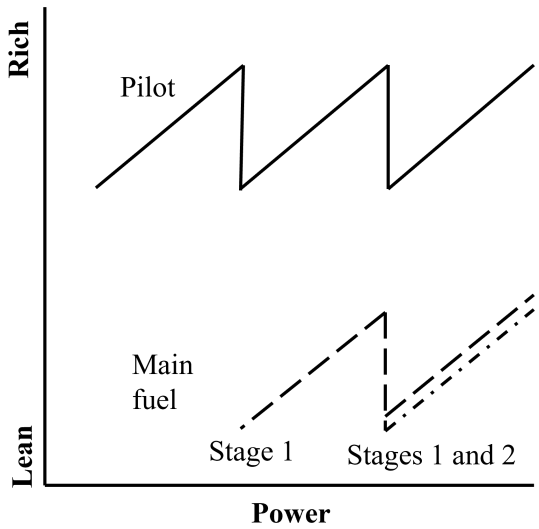

Figure 16. DLE combustor fuel staging.

For example, the implementation of fuel staging was used in a typical DLE combustor by General Electric named Dry Low NOx-1 (DLN-1). This type of turbine implements a two-stage premixed combustor with four modes of operations, as shown in Figure 17. The four operating modes are primary (fuel is injected fully into the primary nozzle; hence

the flame is in the primary zone only), lean-lean (fuel is injected into the primary and secondary nozzle), secondary (fuel is injected into the secondary nozzle only), and pre-load (fuel is injected to both primary and secondary nozzles, however, the flame is in the secondary zone only, optimizing the emissions produced). In the pre-load or premix mode, the emission produced is very low by using natural gas at the base load. The concentration for NOx and CO that can be achieved is lower than 25 ppmv and 9 ppmv, respectively [31]. It can be concluded that the determination of air and fuel staging is essential to improve the operation of the DLE gas turbine.

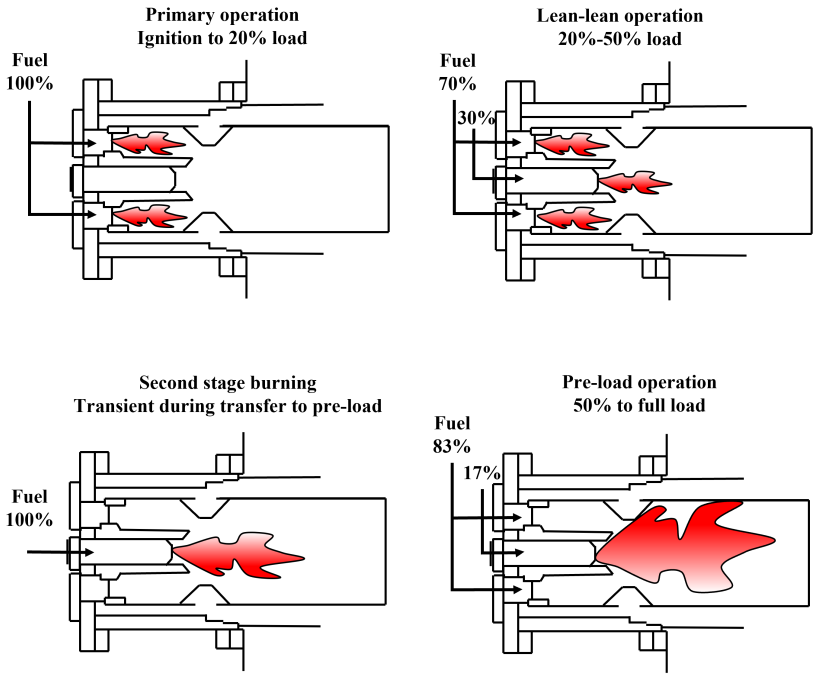

Figure 17. DLN-1 staging.

3.2. Faults in DLE Gas Turbine

The conversion of the combustion system from the non-premixed type in a conventional gas turbine to the lean premixed in DLE type results in different major faults of each combustion mode, creating challenges for the manufacturers. Various severe faults that possibly induce the gas turbine tripping problems for both conventional and DLE gas turbines are summarized in Table 3. Subsequently, the causes and prevention activities of the faults will be analyzed in detail.

One of the gas turbine failures that cause the plant to shut down is the turbine blade fault. According to [70], there are various causes of blade fault, such as creep, oxidation, and fatigue due to high mechanical and thermal stresses. Statistics indicate that fatigue failure contributes to almost 50% of all component damages in gas turbines [71]. Similarly, the fatigue failure also causes problems in the compressor blade, as reported in [72]. The damage experienced in blades and nozzles (stationary blades) will be hard to cure since they have complicated configurations. Further, the root cause of this fault is distinctive depending on the material used, operation conditions, and the component's reliability, which leads to incorrect sensor readings. A faulty sensor creates an uncontrolled combustion system, leading to improper operating temperature and pressure. Hence, the system produces undesired emissions that turn the trip alarm on and contribute to the trip event [73]. Therefore, it is crucial to identify the malfunctioning part in instrumentation to ensure the precision of operational parameter readings. Another problem with the gas turbine is vibration. According to [74], this fault happens because of various sources, including misalignment, shaft unbalance, and bearing problems. In the worst case, extremely high vibrations cause catastrophic failure that is dangerous to the environment and humans.

Aside from it, Liu in [75] mentioned an error that usually occurs during start-up called compressor surge. This fault occurs when the inside pressure is lower than the incoming air pressure. Thus, the airflow to the compressor is blocked. At the same time, there is a possibility of flow rate oscillation that might result in powerful vibrations, causing damage to the system [76]. The effective way to prevent the surge is through active surge control, expanding the operating range of the compressor using a feedback controller. The fault in the igniter also contributes to the gas turbine tripping problem, as reported in [77]. Eroded tips at the igniter produce a weak ignition during starting that interrupts the early combustion stage. It is usually caused by substance removal due to excessive discharge. This error requires expensive downtime to diagnose, resulting in component replacement. The following fault is a shaft locked in the compressor rotor [78]. This fault is caused by rotor blades rubbing against the compressor case, resulting in a coast-down below the limit. Since rubs are common due to physical contact between materials, the effective technique to eliminate this problem is by conducting shaft alignment.

In DLE operation, the tight operating region is the challenge that sometimes disturbs the combustion stability and creates problems due to a lean burning operation. The combustion that significantly leans further eventually causes the flame to blow out. This phenomenon is widely known as the LBO fault, which will be thoroughly discussed in the next section. In many cases, as reported in [79–84], LBO fault is considered the most common problem in DLE systems, which leads the gas turbine to trip. Other problems are observed before the blowout, such as auto-ignition, flashback, and combustion instability. Auto-ignition is an event in which gas ignites spontaneously without any external ignition sources. As reported by Sims in [85], a DLE gas turbine experiences auto-ignition at a particular temperature and pressure that may result in a rapid loss of power as a consequence of a malfunction being detected by the engine control system, which then causes the machine to be shut down. A self-ignition occurs after a specific delay time called auto-ignition delay time (ADT) is reached. This fault can affect the repair or replacement of components in the premix module. In order to prevent auto-ignition, the fuel residence time in the premix tube should be less than the ADT. Therefore, the fuel residence time must be correctly calculated, and the fuel composition should be carefully analyzed to estimate the correct ADT.

Similarly, the flashback is an issue that presents itself much like the auto-ignition. Flashback is a phenomenon of flame feeding back from the combustor into the premixing tube. It occurs when the speed of the local flame is faster than the velocity of the air and fuel mixture leaving the duct. As reported in [86], flashbacks are generally caused by high burning velocity instead of the short ADT. It usually happens during the transient time, such as compressor surge. Some cooling techniques can be implemented in response to performing protection towards flashback events. Further, a well-designed flame detection and fuel controller system can be provided to minimize the effect of a flashback. Another problem in the lean premixed system is the instability of combustion. Commonly, the LPM technique implements swirling to stabilize the combustion. However, the premixing of the fuel and air increases the temperature's homogeneity, which makes the combustor more responsive to the swirl-induced oscillation at any given equivalence ratio [69]. According to [87], the oscillations might happen under lean conditions because the creation of positive feedback of temperature combined with negative feedback of fuel concentration on the reaction rate had occurred. This undesirable oscillatory burning can reduce the combustor's reliability and durability. Moreover, it can decrease the lifetime and damage of the combustor due to high acoustic noise levels at its natural frequency when the resonance occurs. The modes of oscillation may be axial, radial, circumferential, or all three concurrently. In order to guarantee the combustor stability, a dynamic pressure transducer can be applied, ensuring the combustor burns uniformly. Hence, it helps control the flow to create a proper mix of fuel and air, producing uniform combustion. However, a deeper analysis, i.e., Computational Fluid Dynamic modeling, is sometimes required to establish the mixing process by investigating the interaction of flows.

Table 3. Gas Turbine Faults.

Trip Faults	Causes	Prevention	Ref.
DLE gas turbine			
Lean Blowout	Too lean zone that exceed the blowout limit	Controlling the air and fuel ratio to keep the gas turbine in its operating region	[79–84]
Auto-ignition	Combustion reaches the auto-ignition temperature	Well designed premix ducts to accomplish enough mixing at periods less than the typical ADT	[85]
Flashback	High burning velocity	Advanced cooling techniques	[86,87]
Instability	Pressure oscillations at low equivalence ratio of combustion	Utilization of dynamic pressure transducer to control the flow of air and fuel	[69]
Conventional gas turbine			
Blades Fault	Fatigue failure	Application of coatings resistant to oxidation and corrosion at high temperatures	[70,72]
Sensor Fault	Mechanical failure or improper calibration	Routine calibration and instrumentation checking to ensure the reading ability	[73]
High Vibration	Dynamic forces	Continuous monitoring and spectrum analysis to detect the vibration sources	[74]
Compressor Surge	Inside pressure is lower than incoming air pressure	Implementing surge active control	[75]
Igniter Fault	Eroded tips	Component replacement	[77]
Shaft Locked	Physical contact between rotor blades and compressor casing	Shaft alignment	[78]

3.3. Case Study in DLE Gas Turbine

A case study reported the tripping problem of 6 years that was faced by a 4.4 MW single-shaft DLE gas turbine at the Gas District Cooling plant. As per the documentation, the trip is frequent during the first or second year of the installation and reduced in the following year. As the gas turbine was installed in 2010, the highest recorded trips were in the second year, 2011. As the year progressed, fewer trips were recorded, with the minimum in 2014.

Of the total trips, 77% are critical trips where the equipment is shut down abruptly without any allowable period for personnel to bring the operation back into a normal state. The trip report was analyzed and summarized in the pie chart as illustrated in Figure 18. It is found that 25% of the trips are rooted from LBO error during DLE mode that is implemented to reduce NOx and CO_x emission. This severe fault might lead to high maintenance costs due to unplanned downtime. Therefore, LBO is considered the superior problem faced in DLE gas turbines, which will be discussed in detail in the next section.

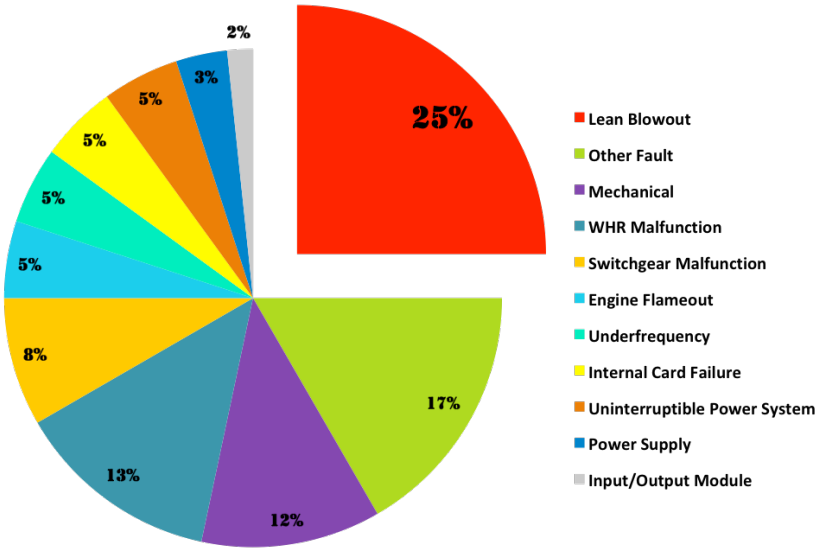

Figure 18. Gas turbine trips cause in GDC plant.

4. Lean Blowout

This section is divided into two parts, which cover a comprehensive description of the LBO phenomenon and preceding techniques of LBO prediction. Firstly, the details of its behavior are defined. Various techniques to predict the LBO are subsequently discussed.

4.1. Lean Blowout Behaviour

Lean blowout (LBO) is a phenomenon of flame extinguishment when the combustion occurs in very lean conditions and exceeds the LBO limit. The LBO limit is considered the lowest equivalence ratio that can carry on the flame [88]. The flame-out will occur accordingly once the combustion reaches that limit. The characteristic of LBO can be clearly explained by NOx and CO trend over the combustion temperature corresponding to the equivalence ratio as depicted in Figure 19. The red zone in the graph shows the LBO limit, which falls into a particular range. The blue zone represents the operating range of lean-burn combustion, which is applied in the DLE gas turbine to maintain a healthy operation.

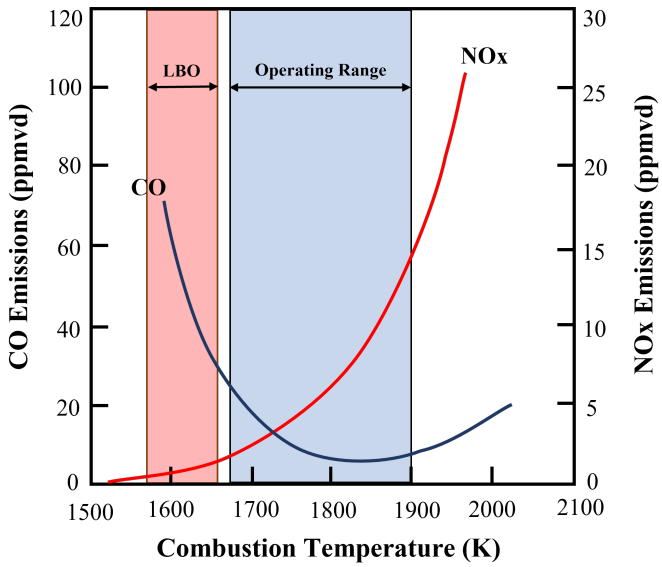

Figure 19. NOx and CO emission to characterize LBO behavior.

The equivalence ratio, where the LBO limit is located, is not a fixed number, and keeps changing due to various factors related to the operating conditions, such as the velocity field that influences the turbulence levels, ambient air, and the temperature and pressure of the combustion chamber as reported in [89]. The flame becomes unstable when the air velocity is high as the turbulence level corresponding to the Reynolds number also increases, as represented in Figure 20. This graph shows the stability loop of the gas turbine combustion for a given inlet pressure and temperature. The limit between the operability region and blow-out varies due to the amount of air mass flow and fuel–air ratio. The equivalence ratio at LBO will increase along with the air mass flow as reported in [90]. Similarly, increasing the fuel flow rate will shorten the residence time of the droplets inside the flame preheat zone, which increases the blow-out limit [91]. The fuel composition also significantly affects the LBO limit. According to [92], fuel with high hydrogen content produces a lower equivalence ratio. Hence, it will extend the lean stability limit and lower the possibility of flame to blow-out. A study by [90] evaluated the effect of the composition ratio in blended fuel of methane and ethane to LBO limit. The result showed that the LBO occurs at a higher equivalence ratio when the ratio of propane in the fuel increases. Further, methane dilution with carbon dioxide and nitrogen increases the LBO equivalence ratio. The percentage of pilot fuel also significantly impacts the LBO limit changes. According to [90], the increase in pilot fuel percentage decreases the equivalence ratio of LBO. Furthermore, the swirl strength and physical mixing of fuel and air will also influence the LBO limit [82,88,93]. The LBO limit increases with the rise of swirl intensity, as reported in [94]. Similarly, the swirl cup's geometry also significantly affects the limits, and the limits will decrease with the airflow of swirlers for dual-axial swirl cups. In contrast, the opposite happens for dual-radial swirl cups.

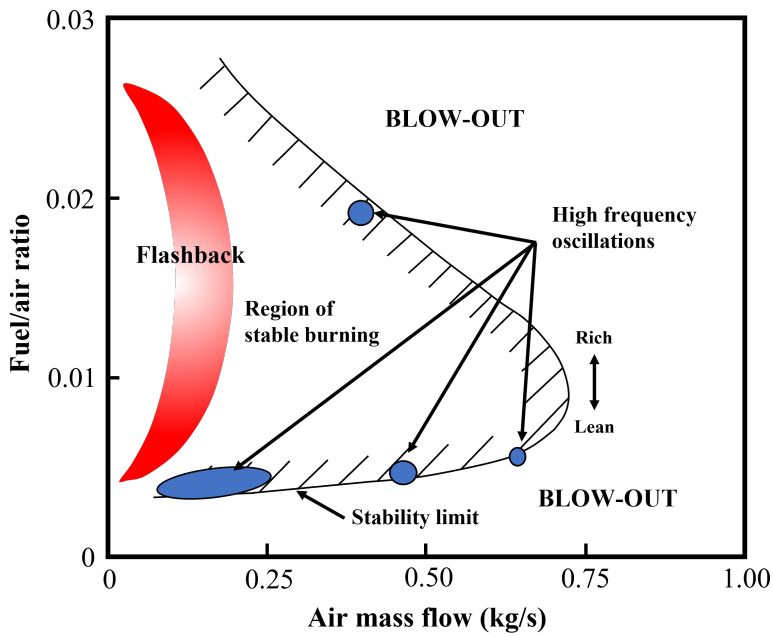

Figure 20. Combustion operability for gas turbine based on air fuel ratio over the air mass flow.

The risk of the flame blowing out is also affected by the fluctuation of power demand [95]. During deceleration, power reduction is achieved by decreasing the fuel flow, affecting the turbine's lower gas temperature and velocity. The shaft rotational speed subsequently turns slower, which results in the compressor not rotating at a similar speed to the turbine. Hence, the mass flow rate of incoming air drops gradually, decreasing the equivalence ratio that gains the LBO occurrence. Further, the decrease in the equivalence ratio reduces the resistance of flame turbulence, raising the level of turbulence [96]. Hence, the flame is quenching, and a local blowout might happen. The high turbulence flame is

generally found near the fuel nozzle and the shear layers at the Inner Recirculation Zone (IRZ). Following that, the flame is driven towards the low-turbulence locations, which increases the residence time. Thus, the flame might reignite the exhausted non-burnt gases along the shear layers. The periodic existence of such events can lead to complete blow-out. Therefore, those are called precursor events of LBO [90].

The detection of the LBO precursor has been developed non-intrusively by monitoring the flame OH* chemiluminescence emissions as done by Muruganandam [97]. Stable combustion is characterized by evenly distributed flame and clear IRZ. As the equivalence ratio is reduced, the flame turns to local extinction, followed by reignition events. The reignition occurs when the flame moves from the exit upstream towards the inlet as the operation gets closer to LBO. When the equivalence ratio is further reduced, the flame that comes downwards becomes very weak. Thus, the flame cannot restore regular combustion, and the flame experiences a blowout.

In DLE gas turbine application, lower emission is the principal drive to implement lean-burn combustion while maintaining operational stability. Therefore, predicting the LBO event before it happens is necessary to avoid unwanted downtime that can gradually reduce the lifetime of the DLE gas turbine.

4.2. Prediction Techniques of Lean Blowout

Lean blowout has various harmful effects that can lead to unplanned trips that increase costs because of unscheduled maintenance. Further, some following effects that occur before LBO, such as large pressure oscillations, can reduce the reliability and availability, decreasing the durability of the DLE gas turbine [83,98]. Hence, the prevention of LBO is required to keep the operation of the DLE gas turbine safe. Various prediction techniques have been developed to prevent LBO events. The early detection of LBO is generally predicted using three methods, which are semi-empirical models, numerical simulation, and hybrid models [99].

In the early stage, semi-empirical techniques were adopted to study the LBO phenomenon using two different models, namely Characteristic Time (CT) and Perfect Stirred Reactor (PSR). The CT model considered the LBO would occur when the residence time is lesser than the total evaporating time and chemical reaction time as implemented by Plee and Mellor in [100]. Meanwhile, the PSR model considered the LBO would occur when the heat release rate is less than the heat loss rate [99]. One of the most used PSR models is developed by Lefebvre [101,102], improving Longwell's PSR model for swirl-stabilized combustors. A semi-empirical model is also proposed by [103] according to flame volume; however, the study is limited to analysis only. The basis of the CT and PSR models lies in energy balance and time balance, respectively. Hu later challenged the previous method in [104] by proposing the hybrid empirical method for prediction instead of just analysis. Yi also proposed the other method for LBO prediction. Furthermore, Gutmark [105] suggested utilizing the flame statistical characteristic. However, two major challenges in the study are the operating conditions of an engine that may gradually change and the chemiluminescent interferences from neighboring nozzles that may complicate LBO detection. Mukhopadhyay in [106] uses symbolic time series analysis that is converted to a symbol string and computed based on the number of occurrences of each symbol over a given period, while Sarkar in [98] proposed the prediction via Generalized D-Markov machine construction and using fuel iterative approximation in [107].

In numerical prediction methods, Unsteady Reynolds-averaged Navier–Stokes and Large Eddy Simulation are mainly implemented to visualize the flame behaviors and predict the LBO. Smith in [108] implemented LES to experimentally predict the LBO of premixed flow past the V-gutter flame holder. While Wang in [109] uses the technology of a Damkohler number extracted from RANS CFD results. The result shows a distinctive transition between stable and unstable flames by decreasing the fuel–air ratio or increasing the inlet velocity at atmospheric pressure and inlet temperature. Nevertheless, the listed approach is conducted on a laboratory scale using an ideal combustor with only the air

and fuel flow. Thus, it exhibits limitations in associating the LBO error with the gas turbine operation. Moreover, the physical sensors and cameras in the study are also not suitable for the gas turbine's extreme temperature application in the field. Therefore, further improvements are needed to predict the LBO that will be able to capture the actual plant conditions.

Nowadays, data-driven predictive analysis is more prevalent, where we can directly develop a predictive model through either simulated or actual plant data. Thus, this type of predictive approach has an excellent potential to predict the LBO that can represent the actual condition in the field. However, limited studies are available in the literature. A study by [110] implemented machine learning using a Support Vector Machine to early detect the LBO. The model successfully predicted the LBO approximately 20 ms before the event. Gangopadhyay in [111] further proposed a deep learning-based framework to predict LBO. The developed Long Short Term Memory based deep learning achieved high accuracy that outperforms Hidden Markov Model and Translational Error. Further, the computation time is also faster than both other methods. The following study implemented data-driven was performed by Iannitelli as documented in [82]. Iannitelli used a classification approach to detect LBO from the exhaust gas temperature profile. The model was developed into three classifiers: principal component analysis (PCA) with linear regression, PCA with a decision tree, and Linear Discriminant Analysis with a given threshold. The result shows a promising result by achieving an accuracy of approximately 97%. Based on the literature, all the data-driven techniques agreed with the actual data, proving that high accuracy is achieved. It has shown significant promise for using the data-driven technique in LBO prognostics. Therefore, future work can use the data-driven method to predict the LBO early and eliminate the potency of tripping in DLE gas turbines.

5. Conclusions

Gas turbines must operate efficiently to achieve the target output as a prime-mover in energy production. Since the primary process should go through combustion, the emission becomes a new challenge that should be controlled. However, controlling the emission sometimes influences the combustion stability. Hence, the combustor technology is essential to improve combustion quality in the gas turbine.

Improvement of clean combustion technology has been enhanced to minimize the emission produced by the gas turbine. Trapped vortex combustion (TVC) and flameless or mild combustion (MILD) were introduced to improve conventional combustion. Rich-burn, quench-mix, lean-burn (RQL) and continuous staged air (COSTAR) were applied for higher emissions reduction in the next generation. Lastly, the DLE and NanoSTAR were subsequently proposed to perform combustion with very low emissions. The comparison of the combustor technologies based on emission reduction and stability shows that the DLE gas turbine has the most profitable features against the others.

In order to support the advancement of technology, various gas turbine models have been developed, which can be classified by the physical and black-box models. The physical model uses Rowen's, IEEE, Aero-derivative, CIGRE, and frequency-dependent models. In contrast, the black-box model is developed by using an Artificial Neural Network. In dynamic gas turbine modeling, Rowen's model has excellent suitability to represent the actual DLE gas turbine due to the functional derivation of the operating curves.

Even though the DLE gas turbine has an excellent capability to reduce the emission, it is prone to frequent tripping due to some faults in a lean operation. According to a 4.4 MW DLE gas turbine case study, LBO reached the highest percentage of total trip causes, leading to high maintenance costs. Thus, this fault should be prevented to keep the DLE mode operating normally. On the other hand, other problems disturbing the DLE operation are auto-ignition, flashback, and instability.

In order to prevent LBO, several aspects can be learned through various methods. The conventional one uses physical sensors and cameras, which are usually used on laboratory scales. In contrast, the predictive approach is usually performed statistically.

The standard methods are semi-empirical models, numerical simulations, and hybrid models. Currently, the data-driven model caught the interest for early prediction of LBO. The advantage of the data-driven model, which predicts the event by learning from the real plant data, can capture the actual condition of such a case. Hence, the LBO can be accurately predicted based on related parameters from its actual data. However, a deeper analysis of the data's important features is also required to develop a good model with high accuracy.

Author Contributions: Conceptualization, M.B.O. and M.F.; methodology, M.B.O.; software, M.F.; validation, R.I. and B.A.A.O.; formal analysis, M.B.O.; investigation, M.F.; resources, R.I.; data curation, M.F.; writing—original draft preparation, M.F. and M.B.O.; writing—review and editing, M.F.; visualization, M.F.; supervision, M.B.O.; project administration, R.I.; funding acquisition, R.I. and M.B.O. All authors have read and agreed to the published version of the manuscript.

Funding: This research was funded by Universiti Teknologi PETRONAS and Ministry of Higher Education Malaysia (MOHE) through grant YUTP (015LC0-382) and PRGS (PRGS/1/2020/TK09/UTP/02/2).

Institutional Review Board Statement: Not applicable.

Informed Consent Statement: Not applicable.

Data Availability Statement: Not applicable.

Acknowledgments: The authors are thankful to Universiti Teknologi PETRONAS and Ministry of Higher Education Malaysia (MOHE) for the support in carrying this research.

Conflicts of Interest: The authors declare no conflict of interest.

Abbreviations

E	Total Energy
L_{igv}	IGV output
i	Specific Enthalphy
K_0	ratio of net power output and inlet heat capacity
$\dot{m}$	Mass Flow
N	Rotor Speed
PR	Design Pressure Ration
Q	Heat Input into System
Q_{in}	Heat of Combustion
Q_{out}	Released Heat
T_a	Ambient Temperature
T_D	Compressor Discharge Temperature
T_f	Firing Temperature
T_M	Output Temperature
T_R	Rated Exhaust Temperature
W	Work Produced from System
w	Air Flow
W_f	Fuel FLow
x	Cycle Pressure Ratio
γ	Ratio of Specific Heat Capacities
η_C	Compressor's Effiiency
η_T	Turbine's Efficiency
ADT	Auto-ignition Delay Time
CO	Carbon Monoxide
$COSTAIR$	COntinuous STaged Air
CT	Characteristic Time
DLE	Dry-Low Emission
IGV	Inlet Guide Vane

IRZ	Inner Recirculation Zone
LBO	Lean Blow-out
LPM	Lean Pre-mixed
MILD	MILD Combustion
NARX	Non-linear Autoregressive Exogenous
NOx	Nitrogen Oxides
PSR	Perfect Stirred Reactor
PCA	Principal Component Analysis
RQL	Rich-burn, Quench-mix, Lean-burn
TVC	Trapped Vortex Combustion

References

1. Stefanizzi, M.; Capurso, T.; Filomeno, G.; Torresi, M.; Pascazio, G. Recent Combustion Strategies in Gas Turbines for Propulsion and Power Generation toward a Zero-Emissions Future: Fuels, Burners, and Combustion Techniques. *Energies* **2021**, *14*, 6694. [CrossRef]
2. Leather, D.T.; Bahadori, A.; Nwaoha, C.; Wood, D.A. A review of Australia's natural gas resources and their exploitation. *J. Nat. Gas Sci. Eng.* **2013**, *10*, 68–88. [CrossRef]
3. Šebalj, D.; Mesarić, J.; Dujak, D. Analysis of methods and techniques for prediction of natural gas consumption: A literature review. *J. Inf. Organ. Sci.* **2019**, *43*, 99–117. [CrossRef]
4. Arman, N. M.; GÜrsoy, B. Challenges in the regional energy complex of Russia, Ukraine, Turkey, and the European Union. *Int. J. Humanit. Soc. Dev. Res.* **2022**, *6*, 7–21.
5. Engerer, H.; Horn, M. Natural gas vehicles: An option for Europe. *Energy Policy* **2010**, *38*, 1017–1029. [CrossRef]
6. Liang, T.; Chai, J.; Zhang, Y.J.; Zhang, Z.G. Refined analysis and prediction of natural gas consumption in China. *J. Manag. Sci. Eng.* **2019**, *4*, 91–104. [CrossRef]
7. Strantzali, E.; Aravossis, K.; Livanos, G.A. Evaluation of future sustainable electricity generation alternatives: The case of a Greek island. *Renew. Sustain. Energy Rev.* **2017**, *76*, 775–787. [CrossRef]
8. Soares, C. *Gas Turbines: A Handbook of Air, Land and Sea Applications*; Elsevier: Amsterdam, The Netherlands, 2011.
9. Pareek, U.; Kar, I.N. Estimating compressor discharge pressure of gas turbine power plant using type-2 fuzzy logic systems. In Proceedings of the 2006 IEEE International Conference on Fuzzy Systems, Vancouver, BC, Canada, 16–21 July 2006; pp. 649–654.
10. Szum, K. IoT-based smart cities: A bibliometric analysis and literature review. *Eng. Manag. Prod. Serv.* **2021**, *13*, 115–136. [CrossRef]
11. Nozari, M.; Tabejamaat, S.; Sadeghizade, H.; Aghayari, M. Experimental investigation of the effect of gaseous fuel injector geometry on the pollutant formation and thermal characteristics of a micro gas turbine combustor. *Energy* **2021**, *235*, 121372. [CrossRef]
12. Khosravy el_Hossaini, M. *Review of the New Combustion Technologies in Modern Gas Turbines*; InTech Open: London, UK, 2013.
13. Jiang, P.; He, X. Experimental investigation of flow field characteristics in a mixed-flow trapped vortex combustor. *Aerosp. Sci. Technol.* **2020**, *96*, 105533. [CrossRef]
14. Jiang, P.; He, X. Ignition characteristics of a novel mixed-flow trapped vortex combustor for turboshaft engine. *Fuel* **2020**, *261*, 116430. [CrossRef]
15. Mishra, D. *Fundamentals of Combustion*; PHI Learning Pvt. Ltd.: New Delhi, India 2007.
16. Zhao, D.; Gutmark, E.; de Goey, P. A review of cavity-based trapped vortex, ultra-compact, high-g, inter-turbine combustors. *Prog. Energy Combust. Sci.* **2018**, *66*, 42–82. [CrossRef]
17. Zhang, R.; Bai, N.; Fan, W.; Huang, X.; Fan, X. Influence of flame stabilization and fuel injection modes on the flow and combustion characteristics of gas turbine combustor with cavity. *Energy* **2019**, *189*, 116216. [CrossRef]
18. Ghenai, C. Combustion of sustainable and renewable biohythane fuel in trapped vortex combustor. *Case Stud. Therm. Eng.* **2019**, *14*, 100498. [CrossRef]
19. Zhu, Y.; Jin, Y.; He, X. Effects of location and angle of primary injection on the cavity flow structure of a trapped vortex combustor model. *Optik* **2019**, *180*, 699–712. [CrossRef]
20. Bagheri, G.; Ranzi, E.; Pelucchi, M.; Parente, A.; Frassoldati, A.; Faravelli, T. Comprehensive kinetic study of combustion technologies for low environmental impact: MILD and OXY-fuel combustion of methane. *Combust. Flame* **2020**, *212*, 142–155. [CrossRef]
21. Cha, C.L.; Lee, H.Y.; Hwang, S.S. The effect of diluted hot oxidant and fuel on NO formation in oxy-fuel flameless combustion using opposite jet. *J. Mech. Sci. Technol.* **2019**, *33*, 3709–3716. [CrossRef]
22. Khalil, H.M.; Eldrainy, Y.A.; Abdelghaffar, W.A.; Abdel-Rahman, A.A. Increased heat transfer to sustain flameless combustion under elevated pressure conditions–a numerical study. *Eng. Appl. Comput. Fluid Mech.* **2019**, *13*, 782–803. [CrossRef]
23. Doan, N.A.K.; Swaminathan, N. Autoignition and flame propagation in non-premixed MILD combustion. *Combust. Flame* **2019**, *201*, 234–243. [CrossRef]
24. Sharma, S.; Chowdhury, A.; Kumar, S. A novel air injection scheme to achieve MILD combustion in a can-type gas turbine combustor. *Energy* **2020**, *194*, 116819. [CrossRef]

25. Khanlari, A.; Salavati-Zadeh, A.; Mohammadi, M.; Najafi, S.B.N.; Esfahanian, V. Effect of Hydrogen Enrichment on Pollutant and Greenhouse Gases Formation and Exergy Efficiency of Methane MILD Combustion. In *Environmentally-Benign Energy Solutions*; Springer: Berlin/Heidelberg, Germany, 2020; pp. 403–429.
26. Jozaalizadeh, T.; Toghraie, D. Numerical investigation behavior of reacting flow for flameless oxidation technology of MILD combustion: Effect of fluctuating temperature of inlet co-flow. *Energy* **2019**, *178*, 530–537. [CrossRef]
27. Chen, J.; Li, J.; Yuan, L.; Hu, G. Flow and flame characteristics of a RP-3 fuelled high temperature rise combustor based on RQL. *Fuel* **2019**, *235*, 1159–1171. [CrossRef]
28. Wey, C.T. Fuel Sensitivity of Lean Blowout in a RQL Gas Turbine Combustor. In Proceedings of the AIAA Propulsion and Energy 2019 Forum, Indianapolis, India, 19–22 August 2019; p. 4035.
29. Liu, Y.; Sun, X.; Sethi, V.; Nalianda, D.; Li, Y.G.; Wang, L. Review of modern low emissions combustion technologies for aero gas turbine engines. *Prog. Aerosp. Sci.* **2017**, *94*, 12–45. [CrossRef]
30. Milcarek, R.J.; Ahn, J. Rich-burn, flame-assisted fuel cell, quick-mix, lean-burn (RFQL) combustor and power generation. *J. Power Sources* **2018**, *381*, 18–25. [CrossRef]
31. Lefebvre, A.H.; Ballal, D.R. *Gas Turbine Combustion: Alternative Fuels and Emissions*; CRC Press: Boca Raton, FL, USA, 2010.
32. Abdelhafez, A.; Rashwan, S.S.; Nemitallah, M.A.; Habib, M.A. Stability map and shape of premixed CH4/O2/CO2 flames in a model gas-turbine combustor. *Appl. Energy* **2018**, *215*, 63–74.
33. Nemitallah, M.A.; Rashwan, S.S.; Mansir, I.B.; Abdelhafez, A.A.; Habib, M.A. Review of novel combustion techniques for clean power production in gas turbines. *Energy Fuels* **2018**, *32*, 979–1004. [CrossRef]
34. Hazel, T.; Peck, G.; Mattsson, H. Industrial Power Systems Using Dry Low Emission Turbines. *IEEE Trans. Ind. Appl.* **2014**, *50*, 4369–4378. [CrossRef]
35. Ayed, A.H.; Kusterer, K.; Funke, H.W.; Keinz, J.; Bohn, D. CFD based exploration of the dry-low-NOx hydrogen micromix combustion technology at increased energy densities. *Propuls. Power Res.* **2017**, *6*, 15–24. [CrossRef]
36. Serbin, S.I.; Kozlovskyi, A.V.; Burunsuz, K.S. Investigations of Nonstationary Processes in Low Emissive Gas Turbine Combustor With Plasma Assistance. *IEEE Trans. Plasma Sci.* **2016**, *44*, 2960–2964. [CrossRef]
37. Suzaki, S.; Kawata, K.; Sekoguchi, M.; Goto, M. Mathematical model for a combined cycle plant and its implementation in an analogue power system simulator. In Proceedings of the 2000 IEEE Power Engineering Society Winter Meeting. Conference Proceedings (Cat. No. 00CH37077), Singapore, Singapore, 23–27 January 2000; Volume 1, pp. 416–421.
38. Ali, A.; Nemitallah, M.A.; Abdelhafez, A.; Alsakhawy, I.G.; Kamal, M.M.; Habib, M.A. Static Stability and Combustion Characteristics of Oxy-Propane Flames in a Premixed Fuel-Flexible Swirl Combustor. *Energy Fuels* **2019**, *33*, 11996–12007. [CrossRef]
39. Ge, B.; Ji, Y.; Zhang, Z.; Zang, S.; Tian, Y.; Yu, H.; Chen, M.; Jiao, G.; Zhang, D. Experiment study on the combustion performance of hydrogen-enriched natural gas in a DLE burner. *Int. J. Hydrogen Energy* **2019**, *44*, 14023–14031. [CrossRef]
40. Lörstad, D.; Ljung, A.; Abou-Taouk, A. Investigation of Siemens SGT-800 industrial gas turbine combustor using different combustion and turbulence models. In Proceedings of the ASME Turbo Expo 2016: Turbomachinery Technical Conference and Exposition, Seoul, Korea, 13–17 June 2016.
41. Asgari, B.; Amani, E. A multi-objective CFD optimization of liquid fuel spray injection in dry-low-emission gas-turbine combustors. *Appl. Energy* **2017**, *203*, 696–710. [CrossRef]
42. Liu, K.; Hubbard, P.; Sadasivuni, S.; Bulat, G. Extension of Fuel Flexibility by Combining Intelligent Control Methods for Siemens SGT-400 Dry Low Emission Combustion System. *J. Eng. Gas Turbines Power* **2019**, *141*, 011003. [CrossRef]
43. Subash, A.A.; Collin, R.; Aldén, M.; Kundu, A.; Klingmann, J. Laser-Based Investigation on a Dry Low Emission Industrial Prototype Burner at Atmospheric Pressure Conditions. In Proceedings of the ASME Turbo Expo 2016: Turbomachinery Technical Conference and Exposition, Seoul, South Korea, 13–17 June 2016.
44. Agbonzikilo, F.E.; Owen, I.; Sadasivuni, S.K.; Bickerton, R.A. Investigation of flow aerodynamics for optimal fuel placement and mixing in the radial swirler slot of a dry low emission gas turbine combustion chamber. *J. Eng. Gas Turbines Power* **2016**, *138*, 051505. [CrossRef]
45. Bulysova, L.; Vasil'ev, V.; Berne, A. Low-Emission combustion of fuel in aeroderivative gas turbines. *Therm. Eng.* **2017**, *64*, 891–897. [CrossRef]
46. Agbonzikilo, F.E.; Owen, I.; Stewart, J.; Sadasivuni, S.K.; Riley, M.; Sanderson, V. Experimental and Numerical Investigation of Fuel–Air Mixing in a Radial Swirler Slot of a Dry Low Emission Gas Turbine Combustor. *J. Eng. Gas Turbines Power* **2016**, *138*, 061502. [CrossRef]
47. Liu, Z.; Karimi, I.A. Simulating combined cycle gas turbine power plants in Aspen HYSYS. *Energy Convers. Manag.* **2018**, *171*, 1213–1225. [CrossRef]
48. Kim, T.S. Model-based performance diagnostics of heavy-duty gas turbines using compressor map adaptation. *Appl. Energy* **2018**, *212*, 1345–1359.
49. Pires, T.S.; Cruz, M.E.; Colaço, M.J.; Alves, M.A. Application of nonlinear multivariable model predictive control to transient operation of a gas turbine and NOX emissions reduction. *Energy* **2018**, *149*, 341–353. [CrossRef]
50. Montazeri-Gh, M.; Fashandi, S.A.M.; Abyaneh, S. Real-time simulation test-bed for an industrial gas turbine engine's controller. *Mech. Ind.* **2018**, *19*, 311. [CrossRef]

51. Rahman, M.; Zaccaria, V.; Zhao, X.; Kyprianidis, K. Diagnostics-Oriented Modelling of Micro Gas Turbines for Fleet Monitoring and Maintenance Optimization. *Processes* **2018**, *6*, 216. [CrossRef]
52. Cáceres, I.E.; Montañés, R.M.; Nord, L.O. Flexible operation of combined cycle gas turbine power plants with supplementary firing. *J. Power Technol.* **2018**, *98*, 188–197.
53. Chaibakhsh, A.; Amirkhani, S. A simulation model for transient behaviour of heavy-duty gas turbines. *Appl. Therm. Eng.* **2018**, *132*, 115–127. [CrossRef]
54. Rowen, W.I. Simplified mathematical representations of heavy-duty gas turbines. *J. Eng. Power* **1983**, *105*, 865–869. [CrossRef]
55. Yee, S.K.; Milanovic, J.V.; Hughes, F.M. Overview and comparative analysis of gas turbine models for system stability studies. *IEEE Trans. Power Syst.* **2008**, *23*, 108–118. [CrossRef]
56. Gómez, F.J.; Chaves, M.A.; Vanfretti, L.; Olsen, S.H. Multi-Domain Semantic Information and Physical Behavior Modeling of Power Systems and Gas Turbines Expanding the Common Information Model. *IEEE Access* **2018**, *6*, 72663–72674. [CrossRef]
57. Eslami, M.; Shayesteh, M.R.; Pourahmadi, M. Optimal design of PID-based low-pass filter for gas turbine using intelligent method. *IEEE Access* **2018**, *6*, 15335–15345. [CrossRef]
58. Kim, D.J.; Moon, Y.H.; Choi, B.S.; Ryu, H.S.; Nam, H.K. Impact of a Heavy-Duty Gas Turbine Operating Under Temperature Control on System Stability. *IEEE Trans. Power Syst.* **2018**, *33*, 4543–4552. [CrossRef]
59. Kumar, S.S.; Xavier, R.J.; Balamurugan, S. Small signal modelling of gas turbine plant for load frequency control. In Proceedings of the 2016 Biennial International Conference on Power and Energy Systems: Towards Sustainable Energy (PESTSE), Bengaluru, India, 21–23 January 2016; pp. 1–5.
60. Asgari, H.; Venturini, M.; Chen, X.; Sainudiin, R. Modeling and simulation of the transient behavior of an industrial power plant gas turbine. *J. Eng. Gas Turbines Power* **2014**, *136*, 061601. [CrossRef]
61. Pondini, M.; Signorini, A.; Colla, V.; Barsali, S. Analysis of a simplified Steam Turbine governor model for power system stability studies. *Energy Procedia* **2019**, *158*, 2928–2933. [CrossRef]
62. Balamurugan, S.; Janarthanan, N.; Chandrakala, K.V. Small and large signal modeling of heavy duty gas turbine plant for load frequency control. *Int. J. Electr. Power Energy Syst.* **2016**, *79*, 84–88. [CrossRef]
63. Khamseh, S.A.; Fatehi, A. Performance monitoring of heavy duty gas turbines based on Bayesian and Dempster-Shafer theory. In Proceedings of the 2017 International Conference on Electrical and Information Technologies (ICEIT), Rabat, Morocco, 15–18 November 2017; pp. 1–7.
64. Boyce, M.P. *Gas Turbine Engineering Handbook*; Elsevier: Amsterdam, The Netherlands, 2011.
65. Moore, M. NOx emission control in gas turbines for combined cycle gas turbine plant. *Proc. Inst. Mech. Eng. Part A J. Power Energy* **1997**, *211*, 43–52. [CrossRef]
66. Funke, H.W.; Beckmann, N.; Abanteriba, S. An overview on dry low NOx micromix combustor development for hydrogen-rich gas turbine applications. *Int. J. Hydrogen Energy* **2019**, *44*, 6978–6990. [CrossRef]
67. Tarik, M.; Omar, M.; Abdullah, M.; Ibrahim, R. Modelling of dry low emission gas turbine using black-box approach. In Proceedings of the TENCON 2017-2017 IEEE Region 10 Conference, Penang, Malaysia, 5–8 November 2017; pp. 1902–1906.
68. Omar, M.B.; Ibrahim, R.; Abdullah, M.F.; Tarik, M.H.M. Modelling of Dry-Low Emission Gas Turbine Fuel System using First Principle Data-Driven Method. *J. Power Technol.* **2020**, *100*, 1.
69. Nemitallah, M.A.; Abdelhafez, A.A.; Ali, A.; Mansir, I.; Habib, M.A. Frontiers in combustion techniques and burner designs for emissions control and CO2 capture: A review. *Int. J. Energy Res.* **2019**, *43*, 7790–7822.
70. Mishra, R.; Thomas, J.; Srinivasan, K.; Nandi, V.; Bhat, R. Failure analysis of nozzle guide vane of a low pressure turbine in an aero gas turbine engine. *J. Fail. Anal. Prev.* **2014**, *14*, 578–587. [CrossRef]
71. Mishra, R.; Thomas, J.; Srinivasan, K.; Nandi, V.; Bhatt, R.R. Failure analysis of an un-cooled turbine blade in an aero gas turbine engine. *Eng. Fail. Anal.* **2017**, *79*, 836–844. [CrossRef]
72. Biswas, S.; Ganeshachar, M.; Kumar, J.; Kumar, V.S. Failure analysis of a compressor blade of gas turbine engine. *Procedia Eng.* **2014**, *86*, 933–939. [CrossRef]
73. Parrella, I.; Bardi, F.; Salerno, G.; Gronchi, D.; Cannavò, M.; Sparacino, E. Using Analytics to Assess Health Status of DLE Combustion Gas Turbines. In Proceedings of the Abu Dhabi International Petroleum Exhibition & Conference, Abu Dhabi, UAE, 11–14 November 2019.
74. Rahmoune, M.B.; Hafaifa, A.; Guemana, M. Neural network monitoring system used for the frequency vibration prediction in gas turbine. In Proceedings of the 2015 3rd International Conference on Control, Engineering & Information Technology (CEIT), Tlemcen, Algeria, 25–27 May 2015; pp. 1–5.
75. Liu, X.; Zhao, L. Modeling of gas turbine engine compressor surge based on equilibrium manifold. In Proceedings of the 2012 International Conference on Control Engineering and Communication Technology, Shenyang, China, 7–9 December 2012; pp. 300–306.
76. Sheng, H.; Chen, Q.; Li, J.; Li, Z.; Wang, Z.; Zhang, T. Robust adaptive backstepping active control of compressor surge based on wavelet neural network. *Aerosp. Sci. Technol.* **2020**, *106*, 106139. [CrossRef]
77. Hamed Ghasemian, Q.Z. Failure Mode and Effect Analysis (FMEA) of Aeronautical Gas Turbine using the Fuzzy Risk Priority Ranking (FRPR) Approach. *Int. J. Soft Comput. Eng.* **2017**, *7*, 81–92.
78. Righi, M.; Ferrer-Vidal, L.E.; Pachidis, V. Body-force and mean-line models for the generation of axial compressor sub-idle characteristics. *Aeronaut. J.* **2020**, *124*, 1683–1701. [CrossRef]

79. Bulat, G.; Liu, K.; Brickwood, G.; Sanderson, V.; Igoe, B. Intelligent operation of Siemens (SGT-300) DLE gas turbine combustion system over an extended fuel range with low emissions. *Turbo Expo: Power Land Sea Air* **2011**, *54624*, 917–925.
80. Nassini, P.C.; Pampaloni, D.; Meloni, R.; Andreini, A. Lean blow-out prediction in an industrial gas turbine combustor through a LES-based CFD analysis. *Combust. Flame* **2021**, *229*, 111391. [CrossRef]
81. Cerutti, M.; Giannini, N.; Ceccherini, G.; Meloni, R.; Matoni, E.; Romano, C.; Riccio, G. Dry low NOx emissions operability enhancement of a heavy-duty gas turbine by means of fuel burner design development and testing. Turbo Expo: Power for Land, Sea, and Air. *Am. Soc. Mech. Eng.* **2018**, *51067*, V04BT04A029.
82. Iannitelli, M.; Allegorico, C.; Garau, F.; Capanni, M. A hybrid model for on-line detection of gas turbine lean blowout events. *Phm Soc. Eur. Conf.* **2018**, *4*. [CrossRef]
83. Kaluri, A.; Malte, P.; Novosselov, I. Real-time prediction of lean blowout using chemical reactor network. *Fuel* **2018**, *234*, 797–808. [CrossRef]
84. Lei, S.; Huang, Y.; Xiwei, W.; Zheng, Z.; Ruixiang, W.; Xiang, F. Hybrid method based on flame volume concept for lean blowout limits prediction of aero engine combustors. *Chin. J. Aeronaut.* **2021**, *34*, 425–437.
85. Sims, G.; Mistry, S.; Wood, J.; Bowen, P.; Crayford, A. A study into the auto-ignition characteristics of hydrocarbon fuels with application to gas turbines. *Turbo Expo Power Land Sea Air* **2008**, *43130*, 625–634.
86. Andersson, M.; Larsson, A.; Carrera, A.M. Pentane rich fuels for standard Siemens DLE gas turbines. *Turbo Expo: Power Land Sea Air* **2011**, *54624*, 905–916.
87. Di Benedetto, A.; Marra, F.; Russo, G. Spontaneous oscillations inlean premixed combustion. *Combust. Sci. Technol.* **2002**, *174*, 1–18. [CrossRef]
88. Sigfrid, I.R.; Whiddon, R.; Collin, R.; Klingmann, J. Influence of reactive species on the lean blowout limit of an industrial DLE gas turbine burner. *Combust. Flame* **2014**, *161*, 1365–1373. [CrossRef]
89. Muruganandam, T.; Nair, S.; Scarborough, D.; Neumeier, Y.; Jagoda, J.; Lieuwen, T.; Seitzman, J.; Zinn, B. Active control of lean blowout for turbine engine combustors. *J. Propuls. Power* **2005**, *21*, 807–814. [CrossRef]
90. Gadiraju, S. Study of Lean Blowout Limits and Effects of Near Blowout Oscillations on Flow Field and Heat Transfer on Gas Turbine Combustor. Ph.D. Thesis, Virginia Tech, Riva San Vitale, Switzerland, 2018.
91. Alsulami, R.A.; Windell, B.; Bartholet, D.; Windom, B. Exploring the role of physical and chemical properties on the ignition and flame stability of liquid fuels with a spray burner and fuel ignition tester (FIT). In Proceedings of the 2018 AIAA Aerospace Sciences Meeting, Kissimmee, FL, USA, 8–12 January 2018; p. 0673.
92. Delattin, F.; Di Lorenzo, G.; Rizzo, S.; Bram, S.; De Ruyck, J. Combustion of syngas in a pressurized microturbine-like combustor: Experimental results. *Appl. Energy* **2010**, *87*, 1441–1452. [CrossRef]
93. Griebel, P.; Boschek, E.; Jansohn, P. Lean blowout limits and NO x emissions of turbulent, lean premixed, hydrogen-enriched methane/air flames at high pressure. *Asme Turbo Expo 2006 Power Land Sea Air* **2007**. [CrossRef]
94. Xiao, W.; Huang, Y. Lean blowout limits of a gas turbine combustor operated with aviation fuel and methane. *Heat Mass Transf.* **2016**, *52*, 1015–1024. [CrossRef]
95. Bompelly, R.K. Lean Blowout and Its Robust Sensing in Swirl Combustors. Ph.D. Thesis, Georgia Institute of Technology, Atlanta, GA, USA, 2013.
96. Zhu, S. Experimental Study of Lean Blowout with Hydrogen Addition in a Swirl-stabilized Premixed Combustor. Doctoral Dissertations, Louisiana State University, Baton Rouge, LA, USA, 2012.
97. Muruganandam, T.; Seitzman, J. Fluid mechanics of lean blowout precursors in gas turbine combustors. *Int. J. Spray Combust. Dyn.* **2012**, *4*, 29–60. [CrossRef]
98. Sarkar, S.; Ray, A.; Mukhopadhyay, A.; Chaudhari, R.R.; Sen, S. Early detection of lean blow out (lbo) via generalized d-markov machine construction. In Proceedings of the American Control Conference (ACC), Portland, OR, USA, 4–6 June 2014; pp. 3041–3046.
99. Lei, S.; Yong, H. An overview of methodologies to predict lean blowout limits for gas turbine combustors. In Proceedings of the 2019 16th International Bhurban Conference on Applied Sciences and Technology (IBCAST), Islamabad, Pakistan, 8–12 January 2019; pp. 709–718.
100. Plee, S.; Mellor, A. Characteristic time correlation for lean blowoff of bluff-body-stabilized flames. *Combust. Flame* **1979**, *35*, 61–80. [CrossRef]
101. Ballal, D.R.; Lefebvre, A.H. Weak extinction limits of turbulent flowing mixtures. *J. Eng. Power* **1979**, *101*, 343–348 [CrossRef]
102. Ballal, D.; Lefebvre, A. Weak extinction limits of turbulent heterogeneous fuel/air mixtures *J. Eng. Power* **1980**, *102*, 416–421. [CrossRef]
103. Xie, F.; Huang, Y.; Hu, B.; Wang, F. Investigation of the relation between flame volume and LBO limits for a swirl-stabilized combustor. In Proceedings of the Materials for Renewable Energy & Environment (ICMREE), 2011 International Conference, Shanghai, China 20–22 May 2011; Volume 2, pp. 2049–2053.
104. Hu, B.; Huang, Y.; Xu, J. A hybrid semi-empirical model for lean blow-out limit predictions of aero-engine combustors. *J. Eng. Gas Turbines Power* **2015**, *137*, 031502. [CrossRef]
105. Yi, T.; Gutmark, E.J. Real-time prediction of incipient lean blowout in gas turbine combustors. *AIAA J.* **2007**, *45*, 1734–1739. [CrossRef]

106. Mukhopadhyay, A.; Chaudhari, R.R.; Paul, T.; Sen, S.; Ray, A. Lean blow-out prediction in gas turbine combustors using symbolic time series analysis. *J. Propuls. Power* **2013**, *29*, 950–960. [CrossRef]
107. Hu, B.; Huang, Y.; Wang, F.; Xie, F. CFD predictions of LBO limits for aero-engine combustors using fuel iterative approximation. *Chin. J. Aeronaut.* **2013**, *26*, 74–84. [CrossRef]
108. Smith, C.; Nickolaus, D.; Leach, T.; Kiel, B.; Garwick, K. LES blowout analysis of premixed flow past V-gutter flameholder. In Proceedings of the 45th AIAA Aerospace Sciences Meeting and Exhibit, Reno, Nevada, 8–11 January 2007; p. 170.
109. Wang, H.r.; Jin, J. Lean blowout predictions of a non-premixed V-Gutter stabilized flame using a Damkohler number methodology. ASME 2011 Turbo Expo: Turbine Technical Conference and Exposition. *Am. Soc. Mech. Eng.* **2011**, 847–858. [CrossRef]
110. Hasti, V.R.; Navarkar, A.; Gore, J.P. A data-driven approach using machine learning for early detection of the lean blowout. *Energy AI* **2021**, *5*, 100099. [CrossRef]
111. Gangopadhyay, T.; De, S.; Liu, Q.; Mukhopadhyay, A.; Sen, S.; Sarkar, S. A Deep Learning Approach to Detect Lean Blowout in Combustion Systems. *arXiv* **2022**, arXiv:2208.01871.