Check for updates

ASME Journal of Engineering for Gas Turbines and Power
Online journal at:
https://asmedigitalcollection.asme.org/gasturbinespower

Philipp zur Nedden[1]
Chair of Fluid Dynamics,
Technische Universität Berlin,
Berlin 10623, Germany
e-mail: p.zurnedden@tu-berlin.de

Mattias E. G. Eck
Chair of Fluid Dynamics,
Technische Universität Berlin,
Berlin 10623, Germany

Finn Lückoff
Chair of Fluid Dynamics,
Technische Universität Berlin,
Berlin 10623, Germany

Lukasz Panek
Siemens Energy,
Huttenstraße 12,
Berlin 10553, Germany

Alessandro Orchini
Chair of Nonlinear Thermo-Fluid Mechanics,
Technische Universität Berlin,
Berlin 10623, Germany

Christian Oliver Paschereit
Chair of Fluid Dynamics,
Technische Universität Berlin,
Berlin 10623, Germany

Flame Transfer Function and Emissions of a Piloted Single Jet Burner: Influence of Hydrogen Content

The next generation of gas turbines must enable partial or pure hydrogen combustion to decarbonize electricity production. In this respect, jet burners have received increased attention in research and industry as a viable solution for combustors functioning over a wide operational range, as they are well-suited for stabilizing flames with high propagation speeds. In this work, a generic piloted single-jet hydrogen burner is developed and characterized experimentally. The jet burner is operated under lean and dry conditions to keep NO_x emissions low. These operating conditions are generally prone to thermoacoustic instabilities. The flame shape, NO_x emissions, and the acoustic response of the flame are characterized while varying the hydrogen concentration and the strength of a pilot injection stage. The measurements of the emissions demonstrate that the jet burner is well-suited for the combustion of natural gas blends and pure hydrogen with low NO_x. The mean flame OH chemiluminescence images display a decreasing flame length with increasing hydrogen share and a strong dependence on the pilot strength. Last, the heat release rate response is assessed based on measured flame transfer functions for different fuel blends. We demonstrate that the injector used in this study is nonstiff. To assess the stiffness of the injector, a full flame transfer matrix is measured for selected cases, and a comparison of the two methods is provided.* [DOI: 10.1115/1.4069115]

Keywords: flame transfer function, jet flames, hydrogen

1 Introduction

The increasing demand for electricity in our society requires permanent technological innovation in the power sector. Facing the challenges of climate change, the share of renewable energy resources, such as wind and solar power, needs to increase. The contribution of these renewable sources to the global power sector is however intermittent. This demands the co-existence of flexible power plants capable of promptly compensating for fluctuations in the grid. The gas-turbine technology is well suited for fulfilling this task. Modern gas turbines are highly optimized regarding pollutant emissions and reliable operation, but they still primarily rely on the combustion of fossil fuels, especially natural gas. These fuels are typically combusted in swirl-stabilized combustors that allow for lean premixed combustion. Within the context of a sustainable future power sector, fossil fuels in the power sector have to be replaced by greener, carbon-free fuels. To promote this transition, established gas turbine combustion concepts need to be adapted, and new concepts need to be developed to allow for the efficient combustion of alternative sustainable fuels, such as green hydrogen.

Although modern swirl burners achieve very low emissions and reliable operation, they come with certain drawbacks, including (i) a rather high-pressure loss in connection with complex geometries, (ii) inherent hydrodynamic instabilities related to precessing vortex core [1,2], and (iii) the sensitivity to thermoacoustic instabilities [3]. For swirl flames, the thermoacoustic feedback is driven by the phase relation of fluctuations in heat release rate, velocity, pressure, and swirl, whereby swirl fluctuations are unique to this type of flow [4–6]. Besides the advantage of aerodynamic flame stabilization, the typical flow field in a swirl combustor is prone to vortex breakdown-induced flashback because of the large variety of (positive and negative) flow velocities [7,8]. This type of flashback occurs primarily along the central recirculation zone. Additionally, boundary layer flashback along the combustor wall and mixing section can occur due to the declining flow velocity [9,10]. To investigate this flashback phenomenon in detail, jet burners have been used in connection with different types of natural gas/hydrogen fuel blends up to pure hydrogen premixed with air [11]. It was shown that the tip temperature of the injector, the degree of confinement, the burner material, and the static pressure have a significant

Turbomachinery Technical Conference & Exposition Hynes Convention Center. June 26–30, 2023.
[1]Corresponding author.
Manuscript received April 28, 2025; final manuscript received May 5, 2025; published online July 21, 2025. Editor: Jerzy T. Sawicki.

Copyright © 2025 by ASME; reuse license CC-BY 4.0

Downloaded from http://asmedigitalcollection.asme.org/gasturbinespower/article-pdf/147/9/091027/7519670/gtp-25-1158.pdf by University of Cincinnati user on 31 December 2025

influence on the boundary layer flashback propensity of turbulent premixed jet flames of different fuel composition [12,13].

Jet burners rely on a simple turbulent pipe flow, with a characteristic uniform flow velocity profile of high momentum, connected to a combustion chamber. Thanks to their high bulk velocities of around 100 m/s, jet flames are highly flashback resistant [14], and the resulting flow field in the combustion chamber can become independent of the Reynolds-number, which leads to a certain robustness against mass flow fluctuations [15]. Because of all these characteristics, jet burners are considered well-suited to combust highly reactive fuels with high burning velocities, such as hydrogen. There exist already concepts to combust fuel blends with high hydrogen contents such as swirl-stabilized combustion with high amounts of steam [16], so-called micromix burners with pure hydrogen diffusion flames [17], and multijet-bruners [18]. Dry low-emission technologies based on swirl combustors are currently limited to fuel blends with around 60 vol.% hydrogen content [17]. The application of multijet-burners, as in Ref. [18], is limited to hydrogen concentrations of around 50 vol.%. For this concentration, the range of NO_x emissions is below 25 ppm corrected to a dry basis. The current dry premixed-burner concepts are not capable of reliably handling fuels with a high hydrogen share. To further extend the operational range of gas turbines to fuels with high hydrogen share, a novel generic design is investigated in this paper.

In this respect, we developed a generic piloted single hydrogen jet burner (POShyDON) that allows for a detailed investigation of the dynamics and stability of jet flames with thermal powers up to 150 kW. This jet burner involves a pilot stage and a main nozzle where preheated and premixed fuel-air mixtures with a hydrogen content of up to 100 % are provided. The burner design is inspired by the FLOX® burner [19], whose ability of stabilizing flame fronts in single-nozzle burner configurations with or without a pilot has been discussed in detail [14,20]. Besides flame stabilization, the response of the flame to acoustic perturbations plays a major role in the design process of a combustor [3]. This response can be described by the relation of incoming acoustic perturbations to heat release rate disturbances, which is typically expressed as a flame transfer function (FTF). Recent results by Ref. [21] show that hydrogen enrichment of nonswirling flames leads to shorter flames with higher cutoff frequencies in the FTF. Accordingly, hydrogen flames appear to be more susceptible to thermoacoustic oscillation at higher frequencies compared to pure natural gas flames.

Whereas flame response and FTF have been thoroughly explored for laminar flames on a laboratory scale [22] and turbulent swirl flames with high thermal power [23,24], there exists a certain lack of data for turbulent premixed jet flames closer to industrial power scales. With the POShyDON jet burner setup, a broad range of operating conditions can be investigated by assessing the FTFs with the acoustic methods, and by investigating the flame shape with optical measurements. The main focus of this study is the characterization of the FTF and NO_x emissions for different premixed jet flame configurations, including the variation of hydrogen-natural gas ratio and pilot flame conditions.

This paper starts with a description of the experimental setup, including the POShyDON-jet burner facility, the applied measurement techniques, and the chosen operating conditions. Subsequently, results on emissions and FTFs are shown for hydrogen blends with and without a pilot. We then investigated the stiffness of the injector by measuring flame transfer functions for selected conditions. A detailed discussion on the obtained results concludes the paper.

2 Experimental Setup

The POShyDON jet burner is investigated within an atmospheric combustion chamber test rig as utilized in Ref. [25]. This setup is displayed in Fig. 1. The main air supply is preheated (1) to 300 °C. A secondary airline is used to premix the pilot flow, which is preheated to the same temperature as the main air. The injection of the main fuel line is located 30 diameters upstream of the jet burner outlet (3). This injection location guarantees a well-premixed fuel-air mixture (required for reliable emission measurements), but, particularly at low frequencies, does not guarantee perfectly premixed conditions, as the fuel injection location is not decoupled from the acoustic forcing.

The combustion system (5) is displayed in further detail in Fig. 2. The arrows display the injection of well-premixed fuel and air. The side view of the burner (Fig. 2(*a*)) shows the concept of the POShyDON burner consisting of three main components: a converging nozzle, a mixing tube, and a front plate. The nozzle is designed to reduce the cross section area to the outlet diameter of the burner (D). This diameter is chosen to generate jet velocities of around $v_{\text{jet}} = 110$ m/s. The mixing tube is 10 D long in order to achieve a uniform flow profile. The dump plate holds an area jump of $A_{\text{chamber}}/A_{\text{jet}} \approx 10$. The injector inside the mixing tube depicted in Fig. 2(*a*) generates technically premixed conditions but is not used in this study.

In Fig. 2(*b*) the burner is shown from the front, seen from downstream of the main flow outlet, and the pilot injection is depicted with arrows. The pilot injection consists of eight holes slanted by an angle of 60 deg with respect to the main jet axis. The test rig can provide separate mass flows of air and fuel for the pilot injection stage and the main premix injection stage. The pilot-fuel-ratio (PFR), defined by

$$\text{PFR} = \frac{\dot{m}_{\text{pilot,fuel}}}{\dot{m}_{\text{pilot,fuel}} + \dot{m}_{\text{premix,fuel}}} \tag{1}$$

Denotes the percentage of the total fuel mass flux fed into the pilot line. An analogous definition holds for the pilot-air-ratio (PAR). The test rig allows for blending several fuels together. The volumetric fraction of hydrogen ν_{H_2} will be varied in this study. For each blend, the total fuel mass flow is adjusted to maintain a constant thermal power of $P_{\text{th}} = 100$ kW. The fuel mass flow is determined by

$$\dot{m}_{\text{fuel}} = \frac{P_{\text{th}}}{(1 - w_{H_2})\text{LHV}_{\text{NG}} + w_{H_2}\text{LHV}_{H_2}} \tag{2}$$

with w denoting the mass fraction and LHV the lower heating value, and NG stands for natural gas. The mass fraction is computed from the volumetric fraction.

By referring to Fig. 1, for the measurement of the heat release rate response to acoustic perturbations, the setup is equipped with four upstream loudspeakers (2), two sets of five nonequidistant microphones up- and downstream of the burner (4 and 7), and a downstream forcing consisting of one loudspeaker (10) used to determine the burner transfer matrix (BTM) and the flame transfer matrix (FTM). An orifice (9) is used at the downstream end to reduce the risk of having self-excited thermoacoustic instabilities in the setup [26]. A quartz glass combustion chamber (6) is installed to have optical access and capture the mean OH* chemiluminescence with an ultraviolet-sensitive camera and a 50 mm UV lens equipped with a $\lambda = 308$ nm optical bandpass-filter (λ denoting the wavelength).

3 Methodology

3.1 Flame Shape. The chemiluminescence is proportional to the heat release rate of the flame for perfectly premixed conditions. The far-upstream fuel–injection stage used allows us to assume perfectly premixed conditions for the mean flame measurements, performed in the absence of acoustic forcing. This data resolves the two-dimensional flame shape, which is of particular interest to assess the influence of the pilot stage on the mean flame shape.

3.2 Emissions. The nitric oxides $NO_{x,\text{ppmvd}}$ are measured on a wet basis by a chemiluminescence detector. The emissions are taken from position (8) as shown in Fig. 1. This detector is equipped with two channels to measure NO_x and NO simultaneously. Via a separate measurement, the oxygen concentration $O_{2,\text{meas}}$ is

Downloaded from http://asmedigitalcollection.asme.org/gasturbinespower/article-pdf/147/9/091027/7519670/gtp-25-1158.pdf by University of Cincinnati user on 31 December 2025

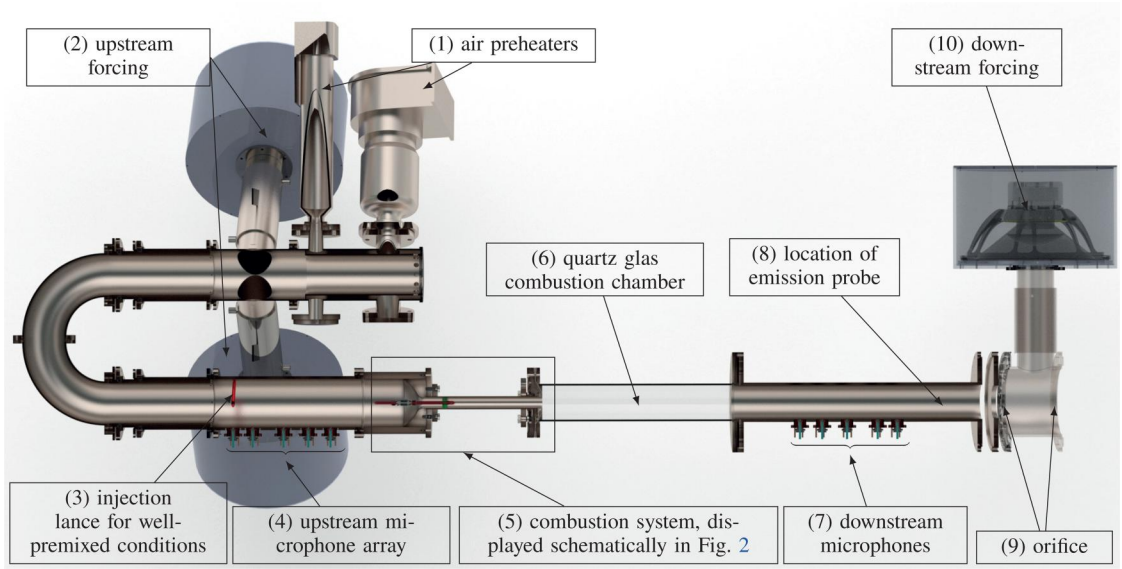

Fig. 1 Overview of the experimental test stand used. For the determination of the BTM and FTM, the downstream loudspeakers are mounted in between the microphone tube and orifice. Further descriptions are in the text.

measured to correct the values to a dry basis as follows. The reference oxygen concentration $O_{2,\mathrm{ref}}$ is set to 15%, and the corrected emissions are estimated by

$$\mathrm{NO}_{x,\mathrm{standard}} = \mathrm{NO}_{\mathrm{x,ppmvd}}\left(\frac{0.2095 - \mathrm{O}_{2,\mathrm{ref}}}{0.2095 - \mathrm{O}_{2,\mathrm{meas}}}\right) \tag{3}$$

This dry correction does not, however, take into account a variation in the fuel composition, which leads to different reaction mechanisms and stoichiometry. In Ref. [27], it is discussed how to account for these effects, based on a further fuel correction, enabling a better comparison of $\mathrm{NO_x}$ for different fuels. Following Ref. [27] we introduce the corrected $\mathrm{NO_x}$ as

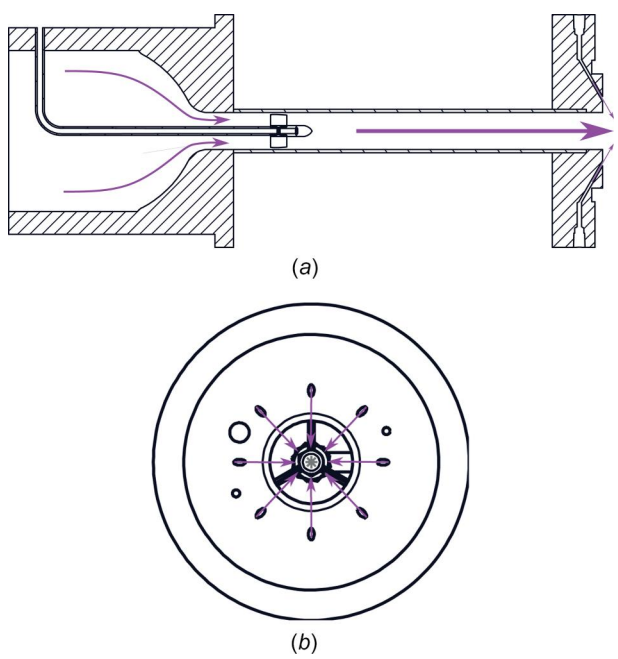

Fig. 2 Schematic view of the POShyDON jet burner. Violet arrows represent premixed gases. The front view (*b*) highlights the pilot fuel injection holes: (*a*) side view and (*b*) front view. (Color version online.)

$$\mathrm{NO}_{\mathrm{x,corr}} = \mathrm{NO}_{\mathrm{x,standard}}\left(\frac{\eta + 1 - 0.2095}{\eta_{\mathrm{ref}} + 1 - 0.2095}\frac{\theta}{\theta_{\mathrm{ref}}}\right) \tag{4}$$

with

$$\eta = \frac{n_C{}^f}{\theta} \quad \text{and} \quad \theta = \frac{n_H{}^f}{4}/\mathrm{LHV}^f \tag{5}$$

with n_X^f denotes the molar amount of the element X in the fuel. η and θ denote fuel-specific parameters, respectively. As a reference condition, the following values are chosen:

$$\eta_{\mathrm{ref}} = 1 \quad \text{and} \quad \theta_{\mathrm{ref}} = \frac{1}{\mathrm{LHV}_{\mathrm{ref}}} \tag{6}$$

The reference value for the LHV is chosen to be that of NG for the experiments and that of methane for the numerical calculations.

3.3 Flame Transfer Function. To characterize the heat release response, we exploit the methodology outlined in Ref. [28], based on the Rankine-Hugoniot jump conditions across a heat element. The procedure outlined below is repeated for frequencies in the range 70 Hz–500 Hz, where the lower frequency limit is set by the mechanical limitations of the loudspeaker.

First, the BTM in nonreactive conditions is evaluated by means of the multimicrophone-method [29], by acoustically forcing using the loudspeakers up- and downstream of the burner. For the linearized acoustics, pressure- and velocity-fluctuations under these conditions, read

$$\tilde{p}_2' = \beta\tilde{p}_1' - \beta(T_r - 1)M_1\left(u_1' + \frac{\bar{u}_1}{\bar{q}}q'\right) \tag{7a}$$

$$u_2' = u_1' - (T_r - 1)\left(\gamma M_1\tilde{p}_1' - \frac{\bar{u}_1}{\bar{q}}q'\right) \tag{7b}$$

where the subscripts $_1$ and $_2$ denote the cold and hot regions across the flame, respectively. We have defined the Mach number $M_1 \equiv \bar{u}_1/\bar{c}_1$, the temperature ratio $T_r \equiv \overline{T}_2/\overline{T}_1$ and the ratio of specific impedances $\beta \equiv (\bar{\rho}_1\bar{c}_1)/(\bar{\rho}_2\bar{c}_2)$. Moreover, we have scaled the pressure fluctuations by the local acoustic impedance, $\tilde{p}_j' \equiv p_j'/(\bar{\rho}_j\bar{c}_j)$, to nondimensionalize the FTM. Then, by assuming

Downloaded from http://asmedigitalcollection.asme.org/gasturbinespower/article-pdf/147/9/091027/7519670/gtp-25-1158.pdf by University of Cincinnati user on 31 December 2025

that the heat release fluctuations q' depend only on the acoustic velocity fluctuations upstream the flame via the FTF

$$\frac{q'}{\bar{q}} = \mathrm{FTF}\frac{u_1'}{\bar{u}_1} \tag{8}$$

one can show that the FTM reads

$$\begin{bmatrix} \tilde{p}_2' \\ u_2' \end{bmatrix} = \begin{bmatrix} \beta & -\beta(T_r - 1)M_1(1 + \mathrm{FTF}) \\ -(T_r - 1)\gamma M_1 & 1 + (T_r - 1)\mathrm{FTF} \end{bmatrix} \begin{bmatrix} \tilde{p}_1' \\ u_1' \end{bmatrix} \tag{9}$$

In the low Mach number limit, the FTM is approximately diagonal, and the FTF can be identified from the T_{22} element, via the relation

$$\mathrm{FTF} = \frac{u_2'/u_1' - 1}{T_r - 1} \tag{10}$$

The acoustic velocities under reactive conditions are measured by means of the multimicrophone-method, and by assuming that the BTM in reactive and nonreactive conditions are unchanged [28]. This requires a single acoustic excitation of the setup in reactive conditions, which is achieved by actuating the system with the loudspeakers upstream of the flame only.

In order to accurately reconstruct the pressure and velocity acoustic waves from the microphone measurements, it is important to use the correct environmental parameters. A small change in the density and, therefore, in the speed of sound, caused by varying the fuel blend injected upstream of the microphone section, can considerably affect the reconstruction quality of the acoustic field. Additionally, this reconstruction error scales with the distance between the microphones' array and the burner inlet plane.

4 Results

In this section, we report the results of the heat release response and the emissions of the POShyDON burner as the hydrogen content of the fuel is varied. The burner is investigated with and without pilot flow. For the cases with a pilot injection, the mass fractions are chosen to be PAR = 5% and PFR = 10%. Preliminary studies were conducted to understand the influence of these parameters. The PAR = 5% is chosen to generate a sufficient penetration depth into the main jet. The PFR = 10% is chosen in order to generate a pilot flame close to stoichiometric conditions. The total air mass flow of the system is kept constant to $\dot{m}_{\mathrm{air}} = 220$ kg/h for all measurements. For each case considered, the fuel mass flow is calculated by using Eq. (2).

4.1 Mean Flame Shape. The mean flame shape is assessed based on OH* chemiluminescence images. The local heat release rate is proportional to the local OH* chemiluminescence for perfectly premixed conditions, which is valid in our setup in the absence of acoustic forcing. This is also the case with a pilot injection because the pilot is perfectly premixed. Figure 3 displays the mean OH* chemiluminescence fields as the hydrogen content varies, with and without a pilot injection.

For the pure natural gas case without pilot fuel injection, the flame is detached comparably far from the burner front plate, resulting in a long flame with a widely distributed heat release rate. Using the pilot injection stage for the same conditions results in a flame stabilized considerably closer to the burner outlet, with a reduced flame length. The length reduction is due to (i) a concentration of the heat release rate closer to the flame root and (ii) a possible recirculation effect assumed to be created by the injection of the eight jets in crossflow penetrating the main jet. By increasing the amount of hydrogen in the fuel composition, the flame length is drastically shortened, and the flame tends to attach closer to the burner outlet. The presence of the pilot alters the mean flame shape: the higher the hydrogen concentration the more pronounced the mean flame shape changes when the pilot is turned on. In particular, the pilot jets concentrate a major share of the heat release rate close to the nozzle outlet: the higher the hydrogen concentration the more pronounced this effect is. This implies a lower residence time, which in turn affects the NO_x levels in a nonlinear fashion [30].

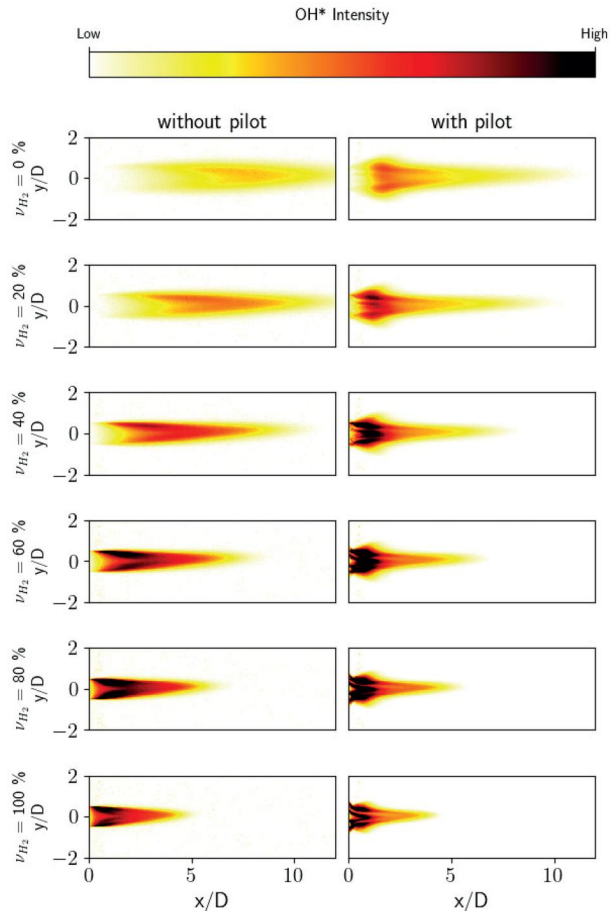

Fig. 3 Mean OH* chemiluminescence with (right column) and without (left column) pilot injection. The axes are normalized by the diameter of the burner outlet D. The thermal power of $P_{\mathrm{th}} = 100$ kW and mass flow of $\dot{m}$=220 kg/h are kept constant.

4.2 Influence of the Hydrogen Content on the Creation of Nitric Oxides. In this section, we discuss the results of the measured NO_x emission levels. For a better understanding, a simulation of the reaction pathways is also performed by using the Cantera software.

4.2.1 Experimental Measurements of NO_x. Figure 4 shows the measured NO_x levels as the H_2 concentration varies for well-premixed conditions, with and without pilot. The reported values are corrected on a dry basis as given in Eq. (4). The filled circles with a dotted line represent the configuration without pilot and the circles with a solid line describe the NO_x emissions as a function of H_2 for the piloted flame. The error bars denote two standard deviations.

The nonpiloted flame generates rather low and constant NO_x emission values for $\nu_{H_2} \leq 20\%$. With increasing hydrogen content, the emission values grow gradually and reach a maximum at $NO_{x,\mathrm{corr}} = 5.2$ ppmvd for $\nu_{H_2} = 60\%$; for pure hydrogen combustion the emissions slightly decrease. In comparison, for the piloted flame, the NO_x emissions show a linearly increasing trend between 0 and 60% hydrogen content. The emissions peak at $NO_{x,\mathrm{corr}} = 6.3$ ppmvd for $\nu_{H_2} = 60\%$; for higher hydrogen shares, the emissions steeply decrease and eventually fall below the value of the nonpiloted flame for pure hydrogen.

The influence of the pilot injection stage generally results in an increased NO_x creation. This increase is likely due to the (locally) richer fuel injected through the pilot stage. The pilot injection is perfectly premixed with an equivalence ratio close to stoichiometric

Downloaded from http://asmedigitalcollection.asme.org/gasturbinespower/article-pdf/147/9/091027/7519670/gtp-25-1158.pdf by University of Cincinnati user on 31 December 2025

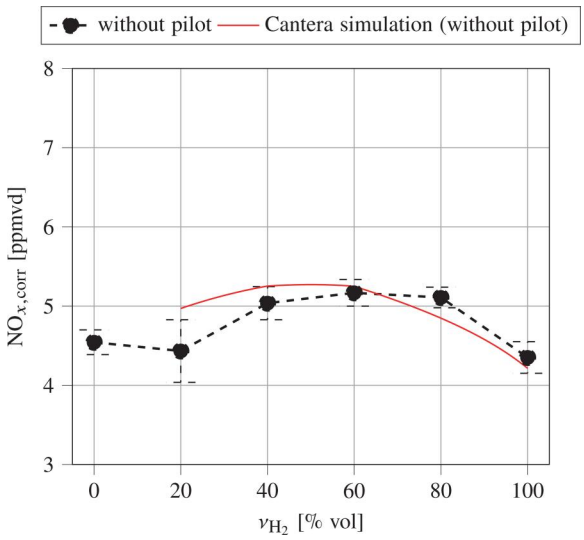

Fig. 4 NO_x levels corrected to a dry basis. The error bars denote ± two standard deviations as a confidence interval for the measurements. Black denotes measurements in well-premixed conditions, and red denotes values obtained with Cantera for well-premixed conditions without pilot. The thermal power of P_{th} = 100 kW and the mass flow of $\dot{m}$=220 kg/h are kept constant. (Color version online.)

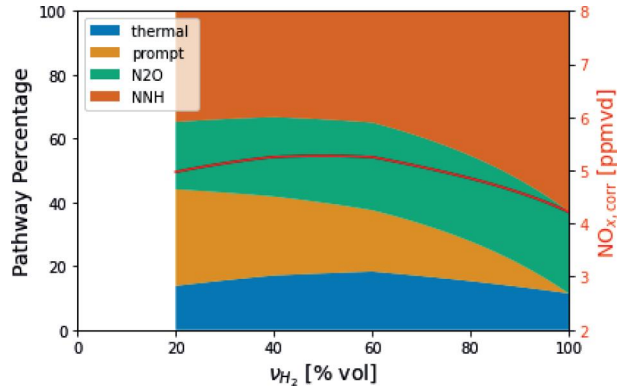

Fig. 5 Pathway analysis as in Ref. [33] for ν_{H_2} matching the equivalence ratio, inlet temperature, and pressure of the experiment. The red curve represents the (normalized) absolute NO_x values as shown in Fig. 4. (Color version online.)

conditions, $\Phi_{pilot} \approx 1.1 - 0.9$,[1] which is relatively high compared to the equivalence ratio of the main jet ($\Phi_{jet} \approx 0.55 - 0.45$). These locally richer areas result in locally higher temperatures, leading to more NO_x formation through the thermal path [31].

For all considered cases, the NO_x emissions of the POShyDON burner range between $NO_{x,standard} = 4.5$–6.8 ppmvd corrected to a dry basis as given in Eq. (3) for a direct comparison to Ref. [16]. These values are comparable with the emissions of state-of-the-art swirl burners with comparable thermal power and air mass flow ranging between $NO_{x,standard} = 4$–6 ppmvd corrected to a dry basis [16]. Generally, we observe that the emissions of the configurations with an active pilot are higher than those without a pilot. However, for high hydrogen concentration (> 80%), this trend is reversed. The higher NO_x values for the measurements with pilot in the range of $\nu_{H_2} = 0$–80% can be explained by the locally richer pilot injections resulting in higher NO_x generation. For the pure hydrogen case with pilot, the shortened flame length reduces the residence time and leads to a reduced NO_x generation. This assumption holds if the pilot injection is well mixed with the main jet.

4.2.2 Numerical Investigation of the NO_x Formation Pathways. To gain a better understanding of the NO_x emissions, Cantera [32] simulations are performed with the GRI3.0 mechanism. These calculations estimate the contribution of various reaction pathways toward the formation of NO_x for varying hydrogen content in the fuel–air mixture [33]. A perfectly stirred reactor (PSR) is assumed for the jet burner without pilot. The PSR assumes the gases to be perfectly mixed. The mass flowrate through the reactor is set constant. For each fuel blend, the same fuel compositions and equivalence ratios are used as in the experiments. Natural gas is approximated with pure methane and corrected as described in Eq. (4). The reactor inlet temperature is matched to the experimental one, and the pressure is set to atmospheric pressure. For each fuel mixture, a typical residence time is estimated from a characteristic length of the main reaction zone and the jet bulk velocities at the burner outlet. A threshold of 50% is chosen to characterize the length of the main reaction zone based on the OH* intensity maps shown in Fig. 3. This residence time estimation gives the highest residence time for the $\nu_{H_2} = 60\%$ case of $t_{res} = 1.8$ ms and the lowest for the pure hydrogen case with $t_{res} = 1.1$ ms. For the pure natural gas case, a realistic residence time could not be deducted from the mean OH* intensity images due to the strongly detached and nonstationary flame resulting in a widely distributed OH* chemiluminescence intensity. For conditions with low hydrogen content, the results do not match as closely. This deviation may be caused by the flame's slightly detached shape, which causes the residence time to be overestimated with the used method.

In Fig. 4, the simulated NO_x values are plotted against the experimental values. Although the absolute values show some deviation from the experimental results, the emissions level and the qualitative behavior are captured well. As in the experimental measurements, a peak in NO_x is found at $\nu_{H_2} = 60\%$ in the Cantera calculations.

To understand the mechanism behind this peak, a pathway analysis of the formation of NO_x as the hydrogen content increases is performed [33]. The results are shown in Fig. 5 where the left axis displays the relative contribution of the four main pathways for NO_x formation; the right axis displays the absolute NO_x level. The contribution of the thermal path is small compared to the other pathways, which is expected since the outlet temperature of the PSR is kept approximately constant by means of the constant thermal power set in the experiment. The variation of the simulated outlet temperature of the PSR is comparably small with ±35 °C for the different fuel variations. For reference, the mean PSR outlet temperature for all performed simulations is 1500 °C. The variation of the thermal path is due to the variation in residence time, with $\nu_{H_2} = 60\%$ corresponding to the highest residence time. The prompt path's contribution decreases with increasing hydrogen share, vanishing at pure H_2 combustion. This is because the prompt path relies on the formation of hydrocarbon CH_i radicals, which are reduced with increased hydrogen share [34]. The absolute contribution of the NNH and N_2O paths to the NO_x formation increases with increasing hydrogen content, counteracting the decay of the prompt path. These counteracting effects lead to the peak at $\nu_{H_2} = 60\%$. The NNH and N_2O paths are the most prominent NO_x formation pathways for the pure hydrogen cases. A dedicated simulation of the conditions including the pilot injection is not performed. This is due to the missing information on the flow field and the mixing properties induced by the pilot jets.

4.2.3 Influence of the Hydrogen Content on the Flame Transfer Function. To assess the thermoacoustic behavior of the POShyDON burner, FTFs are measured for various fuel blends. The results are shown in Fig. 6.

The gain of the FTF for the natural gas case $\nu_{H_2} = 0\%$ displays a typical low-pass filter behavior with a cutoff frequency of ca. 200 Hz, decaying monotonically as the forcing frequency increases. For the measurements with pure NG and low hydrogen content, the gain values increase, after the first decay in the low-frequency range,

[1]The equivalence ratio varies with the composition of the fuel mixture: the higher the hydrogen share, the lower the equivalence ratio.

Downloaded from http://asmedigitalcollection.asme.org/gasturbinespower/article-pdf/147/9/091027/7519670/gtp-25-1158.pdf by University of Cincinnati user on 31 December 2025

toward a second peak around 450 Hz. Also, the phase values increase between 225 Hz and 340 Hz for all measured conditions.

For swirl-stabilized flames, it was shown that two mechanisms characterize the flame response: (i) swirl fluctuations and (ii) vortex roll-up due to Kevin-Helmholtz instabilities [35]. For the jet burner at hand, the flame response is, obviously, driven by the second mechanism. In fact, the shape of the FTF curves is comparable to the model developed by Ref. [36] describing the impact of vortex roll-up due to the Kelvin–Helmholtz instability. The increase in the phase values as well as in the gain values for higher forcing frequencies is due to a second mechanism overlaying the velocity fluctuations, which may be induced by the Kevin–Helmholtz instability. These two counteracting mechanisms overlay constructively and destructively, leading to rising and falling gain and phase values [37]. However, the analysis of this second mechanism requires a dedicated investigation of the complex reacting flow field which is beyond the scope of this study.

A characteristic time delay τ_c for perturbations reaching the flame can be estimated by the ratio of the flame length and the bulk flow velocity at the flame root [38]. Based on this time delay, a rough estimate of the cutoff frequency of the absolute value from the FTF can be derived by taking the reciprocal time delay: $f_c = 1/\tau_c$. This results in an estimate of the cutoff frequency of $f_c \approx 248$ Hz for the natural gas flame response, which qualitatively matches the measured data in Fig. 6. With higher hydrogen content, the cutoff frequency increases, as the flame length is reduced. For $\nu_{H_2} = 100\%$, we estimate $f_c \approx 647$ Hz. This is not within the measured range, and a direct comparison with the experiments is not possible.

The gain of the FTF decreases for frequency below 200 Hz with increasing hydrogen content, suggesting that, for this burner configuration, the hydrogen-enriched flames are less prone to low-frequency thermoacoustic instabilities. Especially for the FTFs with a hydrogen content above $\nu_{H_2} > 60\%$, the gain is lower than one for all frequencies below 200 Hz. For the phase values, below 200 Hz a flatter slope can be observed with increasing hydrogen content. This is consistent with the fact that the length of the flame shortens with increasing hydrogen content (see Fig. 3), resulting in shorter time delays for the flame response. These results are in agreement with those of Ref. [39], where the FTFs of a perfectly premixed lab-scale burner as a function of the hydrogen content are reported.

In our measurements, the phase of the FTFs in the low-frequency limit converges toward a negative value, close to $-\pi$. This indicates that the fuel injection is not stiff [40]. For a stiff injection, the assumption holds that the fuel injection is decoupled from the acoustic forcing, and the acoustic fluctuation does not interact with the fuel supply. In the following, the nonstiffness is characterized by measuring the whole flame transfer matrix for selected cases.

4.2.4 Nonstiff Injector Influence on the Heat Release Rate Fluctuations. As discussed in Refs. [40–42], for nonstiff injectors, the heat release rate fluctuations are also influenced by the pressure fluctuations at the fuel injector. To incorporate this, Eq. (8) needs to be generalized and reads

$$\frac{q'}{\bar{q}} = \mathrm{FTF}\frac{u_1'}{\bar{u}_1} + \mathrm{FTF}_p\frac{p_1'}{\Delta p} \tag{11}$$

where Δp represents the pressure drop across the fuel injector and FTF_p the transfer function of heat release fluctuations to acoustic pressure fluctuations. By plugging Eq. (11) into Eq. (7) yields

$$\mathrm{FTM} = \begin{bmatrix} \beta - \gamma\beta(T_r-1)M_1^2\dfrac{\bar{p}_1}{\Delta p}\mathrm{FTF}_p & -\beta(T_r-1)M_1[1+\mathrm{FTF}] \\ (T_r-1)\gamma M_1\left[-1+\dfrac{\bar{p}_1}{\Delta p}\mathrm{FTF}_p\right] & 1+(T_r-1)\mathrm{FTF} \end{bmatrix} \tag{12}$$

If the pressure drop Δp is small, the low Mach number assumption may, not be sufficient to invoke a diagonal form of the FTM. Then, the FTM implicitly depends on two transfer functions, FTF and FTF_p. It is, therefore, necessary to characterize the full FTM, which requires the excitation of two linearly independent acoustic fields, obtained by forcing, respectively, the loudspeakers upstream and downstream of the flame. Using loudspeakers in the downstream section in connection with a flame requires special care because hot exhaust gases and pressure waves induced by the ignition process may damage the loudspeakers and their casings. Furthermore, in our setup, the downstream forcing section has a different diameter from the microphone section. Including this area jump, unwanted thermoacoustic feedback can occur. For this reason, the full FTM has been characterized only for selected operating conditions.

The FTM is characterized by pure natural gas and pure hydrogen as well as with and without pilot fuel injection. In Figs. 7 and 8, the gain and phase of the FTM elements are shown, respectively. Generally, the influence of the pilot on the gain and phase of the FTFs is minor for the hydrogen case.

For the natural gas conditions ($\nu_{H_2} = 0\%$), the pilot injection results in differing values for the FTM, especially in the T_{12} and T_{22} elements. Without pilot injection, the curves reveal a strongly decreasing phase and gain values for forcing frequencies below approximately 200 Hz in the T_{22} element. The gain reaches down to zero at 200 Hz and the phase jumps by $-\pi$. This can be explained with a velocity node at the burner front plate. The T_{12} element contains gain values that are doubled as the pilot injection is turned off for forcing frequencies between 150 and 400 Hz. This difference originates from the strongly differing flame shapes as seen in Fig. 3.

To derive the FTF from the relation of u_2'/u_1', (i) the injector has to be stiff, and (ii) the assumption of low Mach number flow in the burner should hold true. To assess the stiffness of the injector, we focus on the absolute value of the T_{21} element, which should be close to zero for stiff injectors. For both the hydrogen and the natural gas case, the T_{21} element is small but nonzero. The gain of the T_{21}

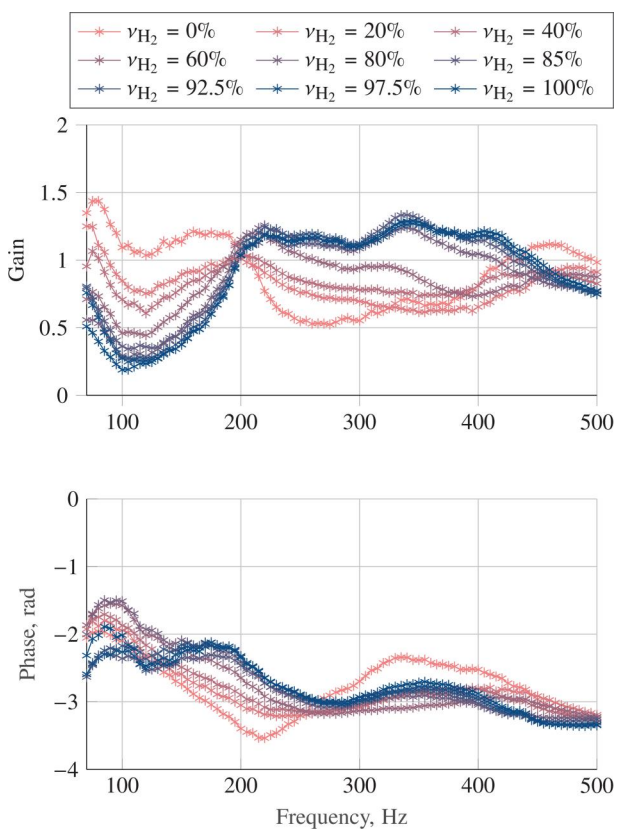

Fig. 6 Flame transfer functions for well-premixed flames with varying hydrogen content at a constant thermal power of P_{th} = 100 kW and mass flow of $\dot{m}$=220 kg/h without pilot flow injection

Downloaded from http://asmedigitalcollection.asme.org/gasturbinespower/article-pdf/147/9/091027/7519670/gtp-25-1158.pdf by University of Cincinnati user on 31 December 2025

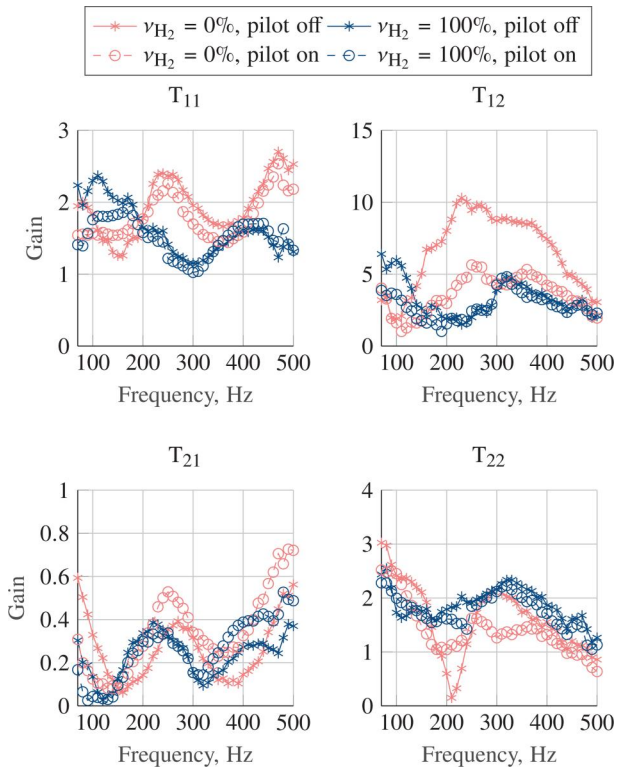

Fig. 7 Flame transfer matrix gain values for pure hydrogen and pure natural gas flame, with and without pilot injection are measured. The thermal power of P_{th} = 100 kW and mass flow of $\dot{m}$=220 kg/h are kept constant. T_{ij} denotes the single elements of the FTM.

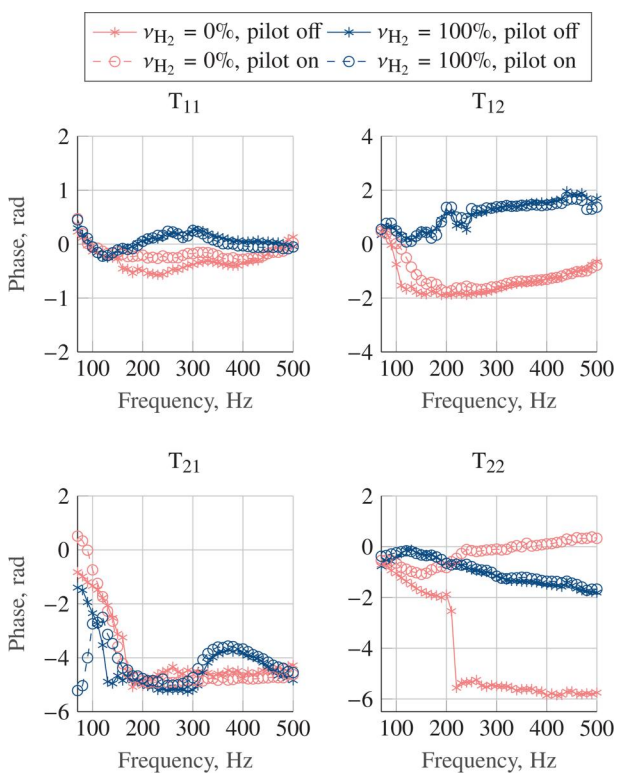

Fig. 8 Flame transfer matrix phase values for pure hydrogen and pure natural gas flame with and without pilot injection are measured. The thermal power of P_{th} = 100 kW and mass flow of $\dot{m}$=220 kg/h are kept constant. T_{ij} denotes the single elements of the FTM.

element is a frequency-dependent function, with particularly high values at the measured frequency limits at 70 and 500 Hz. Thus, for both fuels, the stiff-injector assumption cannot be made. This is in agreement with the fact that the phase of the FTF measurements, as reported in Fig. 6, approaches the value of $-\pi$.

To verify that the low Mach number condition is satisfied, we instead note that, as per Eq. (11), the T_{12} element should approximate zero and the $T_{11} = \beta$ should be approximately constant. For both fuel types, β should be approximately 1.55. The T_{11} element is close to the calculated β as can be seen in Fig. 7 for the mean gain value estimated over all the frequencies. The corresponding phase value of the T_{11} (see Fig. 8) is approximately zero for both fuels; this is expected since β is a real-valued number.

The gain of the T_{12} element is strongly frequency dependent and clearly nonzero. For the natural gas case, T_{12} ranges up to 10 in the gain value for the case without pilot. However, to the authors' knowledge, there exists no estimate that evaluates whether these rather high gain values clearly indicate the low Mach number assumption to be matched or not.

Since the T_{12} element is nonzero, a full FTM must be measured to separate the contribution of the velocity fluctuations to the heat release from the contribution due to the pressure fluctuations. Although the Mach number remains relatively small ($M_{max} \approx 0.2$) within the potential core of the jet for varying hydrogen share, the off-diagonal elements of the FTM remain nonzero, indicating a nonstiff fuel injector combined with a slight violation of the low Mach number assumption.

To support the discussion above, we rely on an indirect method: we compare the FTFs obtained with a single acoustic excitation, shown in Fig. 6, with the FTFs extracted from the T_{22} of the FTMs,

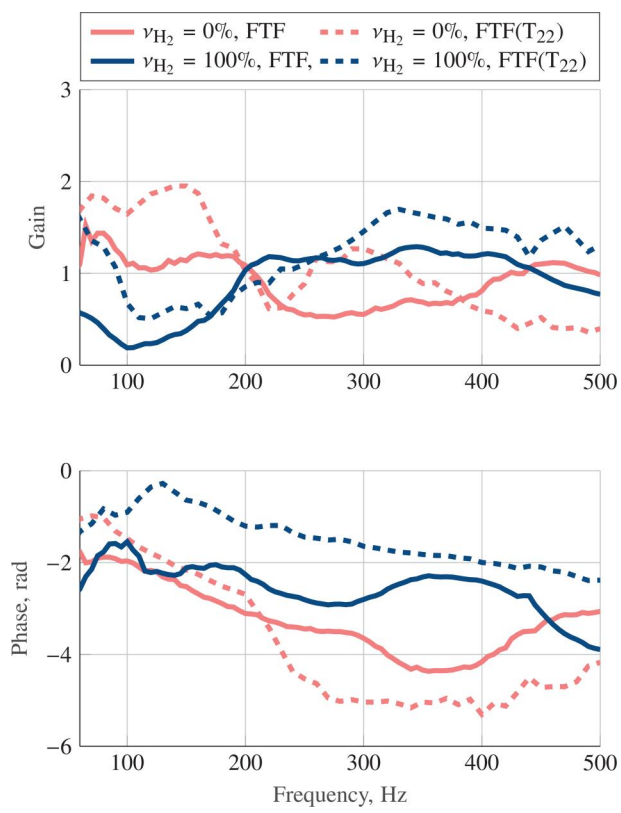

Fig. 9 Comparison of the FTF for two varying fuel types at reference conditions without pilot injection. The FTF once is computed by the presented methodology in Eq. (10) and once by replacing u_2'/u_1' with the FTM_{22} element denoted as FTF(T_{22}). The thermal power of P_{th} = 100 kW and mass flow of $\dot{m}$=220 kg/h are kept constant.

Downloaded from http://asmedigitalcollection.asme.org/gasturbinespower/article-pdf/147/9/091027/7519670/gtp-25-1158.pdf by University of Cincinnati user on 31 December 2025

which required two linearly independent acoustic excitations. To obtain the latter, the T_{22} element of the FTMs is plugged into Eq. (10), and the resulting transfer functions are denoted as FTF(T_{22}) and are displayed in Fig. 9. These two transfer functions should be comparable only if the FTM is approximately diagonal and differ otherwise.

For the hydrogen case, the slope of the gain curves matches, and the phase value follows a monotonically falling graph for frequencies $\geq$100 Hz. Nevertheless, the absolute values do not perfectly match. For the natural gas case, the slope of the gain and phase values strongly differs. This error should be due to the nonstiff injector and the low Mach number violation, resulting in a pressure dependency of the FTF. This is particularly the case for the natural gas conditions, which display higher values in the T_{12} and T_{21} elements compared to the hydrogen case. Therefore, it can be concluded for both fuels that the fluctuations within the signal of the FTF measured with only upstream forcing are induced by the nonstiffness of the fuel injector and the influence of the slightly violated low Mach number assumption.

5 Conclusions

In this study, we have proposed the use of a piloted single jet burner, POShyDON, to stabilize the combustion of fuel blends spanning from pure natural gas to pure hydrogen. The burner concept is conceived to enable the next generation of gas turbines to flexibly combust blends of hydrogen-rich fuels. The burner characteristics have been investigated under atmospheric conditions for differing fuel blends and pilot injections.

We have demonstrated that the POShyDON burner can operate at 100% hydrogen at dry conditions with low NO_x formation. For the emissions, we showed that fuel blends with a higher amount of hydrogen generally result in increased emissions, although these levels decrease when moving from hydrogen-rich to pure hydrogen combustion. Furthermore, it was shown that the addition of a pilot injection stage slightly increases the NO_x production. By considering time-averaged chemiluminescence data, we have shown that the flames stabilize further upstream when the pilot injection stage is turned on. With a higher hydrogen content, the flame length reduces and anchors closer to the burner outlet.

Last, the heat release dynamic response to acoustic perturbations was characterized. The measured FTFs display an increased cutoff frequency and shortened time lag with increasing hydrogen content. For low frequencies, the gain of the FTFs is dampened with increasing hydrogen content. The phase of the FTFs converges toward $-\pi$, which indicates that the fuel injector is not stiff. This was assessed by measuring the full FTMs for selected cases. It was observed that the T_{21} element of the FTM is not zero, implying a nonstiff injector. However, the T_{11} element is frequency dependent, and the T_{12} is nonzero, which suggests that the low Mach number assumption is slightly violated. A reconstruction of the FTF from the T_{22} element of the FTM reveals certain differences to the FTF measured with upstream forcing only which implies an influence of the pressure fluctuations on the heat release dynamics. As a consequence, the estimate of the FTF of our burner with a nonstiff injector with one (upstream) forcing is inaccurate, and the full FTM should be measured instead.

Acknowledgment

This work has been conducted as a part of the ERC Advanced Grant HYPOTHESis. The authors gratefully acknowledge the FVV eV for developing the POShyDON burner within the project no. 1358 "Dynamik von Drall- und Strahlflammen" under the funding numbers FVV 6013580 & FVV 6013581. The authors acknowledge the advice of Bruno Schuermans. Special thanks go out to Thorsten Dessin, Andy Göhrs, David Lück, and Andrea Maneck for manufacturing the POShyDON burner and supporting the design process. Moreover, the authors thank Maximilian Naster and Randy Lange for supporting the experiments.

Funding Data

- Dynamik von Drall- und Strahlflammen (Grant Nos. FVV 6013580 and FVV 6013581; Funder ID: 10.13039/501100003162).
- European Research Council (Grant No. 101019937; Funder ID: 10.13039/501100000781).

References

[1] Syred, N., 2006, "A Review of Oscillation Mechanisms and the Role of the Precessing Vortex Core (PVC) in Swirl Combustion Systems," Prog. Energy Combust. Sci., **32**(2), pp. 93–161.

[2] Candel, S., Durox, D., Schuller, T., Bourgouin, J.-F., and Moeck, J. P., 2014, "Dynamics of Swirling Flames," Annu. Rev. Fluid Mech., **46**(1), pp. 147–173.

[3] Lieuwen, T. C., and Yang, V., 2005, *Combustion Instabilities in Gas Turbine Engines: Operational Experience, Fundamental Mechanisms, and Modeling*, American Institute of Aeronautics and Astronautics, Reston, VA.

[4] Palies, P., Durox, D., Schuller, T., and Candel, S., 2011, "Experimental Study on the Effect of Swirler Geometry and Swirl Number on Flame Describing Functions," Combust. Sci. Technol., **183**(7), pp. 704–717.

[5] Albayrak, A., Juniper, M. P., and Polifke, W., 2019, "Propagation Speed of Inertial Waves in Cylindrical Swirling Flows," J. Fluid Mech., **879**, pp. 85–120.

[6] Müller, J. S., Lückoff, F., Kaiser, T. L., Paschereit, C. O., and Oberleithner, K., 2022, "Modal Decomposition and Linear Modeling of Swirl Fluctuations in the Mixing Section of a Model Combustor Based on Particle Image Velocimetry Data," ASME J. Eng. Gas Turbines Power, **144**(1), p. 011021.

[7] Reichel, T. G., Terhaar, S., and Paschereit, O., 2015, "Increasing Flashback Resistance in Lean Premixed Swirl-Stabilized Hydrogen Combustion by Axial Air Injection," ASME J. Eng. Gas Turbines Power, **137**(7), p. 071503.

[8] Kiesewetter, F., Konle, M., and Sattelmayer, T., 2007, "Analysis of Combustion Induced Vortex Breakdown Driven Flame Flashback in a Premix Burner With Cylindrical Mixing Zone," ASME J. Eng. Gas Turbines Power, **129**(4), pp. 929–936.

[9] Hoferichter, V., and Sattelmayer, T., 2018, "Boundary Layer Flashback in Premixed Hydrogen–Air Flames With Acoustic Excitation," ASME J. Eng. Gas Turbines Power, **140**(5), p. 051502.

[10] Baumgartner, G., Boeck, L. R., and Sattelmayer, T., 2016, "Experimental Investigation of the Transition Mechanism From Stable Flame to Flashback in a Generic Premixed Combustion System With High-Speed Micro-Particle Image Velocimetry and Micro-PLIF Combined With Chemiluminescence Imaging," ASME J. Eng. Gas Turbines Power, **138**(2), p. 021501.

[11] Shaffer, B., Duan, Z., and McDonell, V., 2013, "Study of Fuel Composition Effects on Flashback Using a Confined Jet Flame Burner," ASME J. Eng. Gas Turbines Power, **135**(1), p. 011502.

[12] Kalantari, A., Sullivan-Lewis, E., and McDonell, V., 2016, "Flashback Propensity of Turbulent Hydrogen–Air Jet Flames at Gas Turbine Premixer Conditions," ASME J. Eng. Gas Turbines Power, **138**(6), p. 061506.

[13] Duan, Z., Shaffer, B., McDonell, V., Baumgartner, G., and Sattelmayer, T., 2014, "Influence of Burner Material, Tip Temperature, and Geometrical Flame Configuration on Flashback Propensity of H2-Air Jet Flames," ASME J. Eng. Gas Turbines Power, **136**(2), p. 021502.

[14] Lammel, O., Severin, M., Ax, H., Lückerath, R., Tomasello, A., Emmi, Y., Noll, B., Aigner, M., and Panek, L., 2017, "High Momentum Jet Flames at Elevated Pressure: A — Experimental and Numerical Investigation for Different Fuels," ASME Paper No. GT2017-64615.

[15] Severin, M. J., Lammel, O., Meier, W., and Aigner, M., 2017, "Flame Stabilization Regimes of Lean Premixed Confined Jet Flames at Different Reynolds Numbers," AIAA Paper No. 2017-4684.

[16] Göke, S., and Paschereit, C. O., 2013, "Influence of Steam Dilution on Nitrogen Oxide Formation in Premixed Methane/Hydrogen Flames," J. Propul. Power, **29**(1), pp. 249–260.

[17] Noble, D., Wu, D., Emerson, B., Sheppard, S., Lieuwen, T., and Angello, L., 2021, "Assessment of Current Capabilities and Near-Term Availability of Hydrogen-Fired Gas Turbines Considering a Low-Carbon Future," ASME J. Eng. Gas Turbines Power, **143**(4), p. 041002.

[18] Krebs, W., Schulz, A., Witzel, B., Johnson, C., Laster, W., Pent, J., Schilp, R., Wasif, S., and Weaver, A., 2022, "Advanced Combustion System for High Efficiency (ACE) of the New SGT5/6- 9000HL Gas Turbine," ASME Paper No. GT2022-82299.

[19] Lückerath, R., Meier, W., and Aigner, M., 2008, "FLOX® Combustion at High Pressure With Different Fuel Compositions," ASME J. Eng. Gas Turbines Power, **130**(1), p. 011505.

[20] Severin, M., Lammel, O., Ax, H., Lückerath, R., Meier, W., Aigner, M., and Heinze, J., 2018, "High Momentum Jet Flames at Elevated Pressure: Detailed Investigation of Flame Stabilization With Simultaneous Particle Image Velocimetry and OH-LIF," ASME J. Eng. Gas Turbines Power, **140**(4), p. 041508.

[21] Æsøy, E., Aguilar, J. G., Wiseman, S., Bothien, M. R., Worth, N. A., and Dawson, J. R., 2020, "Scaling and Prediction of Transfer Functions in Lean Premixed H2/CH4-Flames," Combust. Flame, **215**, pp. 269–282.

[22] Schuller, T., Poinsot, T., and Candel, S., 2020, "Dynamics and Control of Premixed Combustion Systems Based on Flame Transfer and Describing Functions," J. Fluid Mech., **894**, p. P1.

[23] Paschereit, C. O., Schuermans, B., Polifke, W., and Mattson, O., 2002, "Measurement of Transfer Matrices and Source Terms of Premixed Flames," ASME J. Eng. Gas Turbines Power, **124**(2), pp. 239–247.

Downloaded from http://asmedigitalcollection.asme.org/gasturbinespower/article-pdf/147/9/091027/7519670/gtp-25-1158.pdf by University of Cincinnati user on 31 December 2025

[24] Schuermans, B., Guethe, F., Pennell, D., Guyot, D., and Paschereit, C. O., 2010, "Thermoacoustic Modeling of a Gas Turbine Using Transfer Functions Measured Under Full Engine Pressure," ASME J. Eng. Gas Turbines Power, **132**(11), p. 111503.
[25] Oberleithner, K., Schimek, S., and Paschereit, C. O., 2015, "Shear Flow Instabilities in Swirl-Stabilized Combustors and Their Impact on the Amplitude Dependent Flame Response: A Linear Stability Analysis," Combust. Flame, **162**(1), pp. 86–99.
[26] Bechert, D. W., 1980, "Sound Absorption Caused by Vorticity Shedding, Demonstrated With a Jet Flow," J. Sound Vib., **70**(3), pp. 389–405.
[27] Garan, N., Dybe, S., Paschereit, C., and Djordjevic, N., 2023, "Consistent Emission Correction Factors Applicable to Novel Energy Carriers and Conversion Concepts," Fuel, **341**, p. 127658.
[28] Alemela, P. R., Fanca, D., Ettner, F., Hirsch, C., Sattelmayer, T., and Schuermans, B., 2008, "Flame Transfer Matrices of a Premixed Flame and a Global Check With Modelling and Experiments," ASME Paper No. GT2008-50111.
[29] Jang, S.-H., and Ih, J.-G., 1998, "On the Multiple Microphone Method for Measuring in-Duct Acoustic Properties in the Presence of Mean Flow," J. Acoust. Soc. Am., **103**(3), pp. 1520–1526.
[30] Rutar, T., Horning, D. C., Lee, J. C. Y., and Malte, P. C., 1998, "NOx Dependency on Residence Time and Inlet Temperature for Lean-Premixed Combustion in Jet-Stirred Reactors," ASME Paper No. 98-GT-433.
[31] Abian, M., Alzueta, M. U., and Glarborg, P., 2015, "Formation of NO From N2/O2 Mixtures in a Flow Reactor: Toward an Accurate Prediction of Thermal NO," Int. J. Chem. Kinetics, **47**(8), pp. 518–532.
[32] Goodwin, D. G., Moffat, H. K., Schoegl, I., Speth, R. L., and Weber, B. W., 2022, "Cantera: An Object-Oriented Software Toolkit for Chemical Kinetics, Thermodynamics, and Transport Processes," Zenodo, Switzerland, accessed Nov. 11, 2022, https://zenodo.org/records/48735
[33] Guethe, F., de la, C., Garcia, M., and Burdet, A., 2009, "Flue Gas Recirculation in Gas Turbine: Investigation of Combustion Reactivity and NOx Emission," ASME Paper No. GT2009-59221.
[34] Fenimore, C. P., 1971, "Formation of Nitric Oxide in Premixed Hydrocarbon Flames," Symp. (Int.) Combust., **13**(1), pp. 373–380.
[35] Lückoff, F., Kaiser, T., Paschereit, C., and Oberleithner, K., 2021, "Mean Field Coupling Mechanisms Explaining the Impact of the Precessing Vortex Core on the Flame Transfer Function," Combust. Flame, **223**, pp. 254–266.
[36] Oberleithner, K., and Paschereit, C., 2016, "Modeling Flame Describing Functions Based on Hydrodynamic Linear Stability Analysis," ASME Paper No. GT2016-57316.
[37] Hemchandra, S., Lieuwen., and T., Shreekrishna, 2010, "Premixed Flame Response to Equivalence Ratio Perturbations," Combust. Theory Modell., **14**(5), pp. 681–714.
[38] Alemela, R., Fanaca, D., Hirsch, C., Sattelmayer, T., and Schuermans, B., 2010, "Determination and Scaling of Thermo Acoustic Characteristics of Premixed Flames," Int. J. Spray Combust. Dyn., **2**(2), pp. 169–198.
[39] Aguilar, J. G., Æsøy, E., and Dawson, J. R., 2022, "The Influence of Hydrogen on the Stability of a Perfectly Premixed Combustor," Combust. Flame, **245**, p. 112323.
[40] Polifke, W., and Lawn, C., 2007, "On the Low-Frequency Limit of Flame Transfer Functions," Combust. Flame, **151**(3), pp. 437–451.
[41] Polifke, W., Poncet, A., Paschereit, C. O., and Döbbeling, K., 2001, "Reconstruction of Acoustic Transfer Matrices by Instationary Computational Fluid Dynamics," J. Sound Vib., **245**(3), pp. 483–510.
[42] Bobusch, B., Moeck, J., Paschereit, C., and Sadig, S., 2012, "Thermoacoustic Stability Analysis of a Kerosene-Fueled Lean Direct Injection Combustor Employing Acoustically and Optically Measured Transfer Matrices," ASME Paper No. GT2012-69034.

Downloaded from http://asmedigitalcollection.asme.org/gasturbinespower/article-pdf/147/9/091027/7519670/gtp-25-1158.pdf by University of Cincinnati user on 31 December 2025