Geo. A. Richards
Jimmy D. Thornton
U.S. Department of Energy,
National Energy Technology Laboratory,
Morgantown, WV 26505

Edward H. Robey
U.S. Department of Energy,
Parsons Project Services,
Morgantown, WV 26505

Leonell Arellano
Solar Turbines, Inc.,
2200 Pacific Highway,
San Diego, CA 92101

Open-Loop Active Control of Combustion Dynamics on a Gas Turbine Engine

Combustion dynamics is a prominent problem in the design and operation of low-emission gas turbine engines. Even modest changes in fuel composition or operating conditions can lead to damaging vibrations in a combustor that was otherwise stable. For this reason, active control has been sought to stabilize combustors that must accommodate fuel variability, new operating conditions, etc. Active control of combustion dynamics has been demonstrated in a number of laboratories, single-nozzle test combustors, and even on a fielded engine. In most of these tests, active control was implemented with closed-loop feedback between the observed pressure signal and the phase and gain of imposed fuel perturbations. In contrast, a number of recent papers have shown that open-loop fuel perturbations can disrupt the feedback between acoustics and heat release that drives the oscillation. Compared to the closed-loop case, this approach has some advantages because it may not require high-fidelity fuel actuators, and could be easier to implement. This paper reports experimental tests of open-loop fuel perturbations to control combustion dynamics in a complete gas turbine engine. Results demonstrate the technique was very successful on the test engine and had minimal effect on pollutant emissions. [DOI: 10.1115/1.2204978]

1 Introduction

Combustion instability has become a significant issue in the development and operation of low-emission stationary gas turbines. Compared to earlier diffusion flame combustors, stationary gas turbines now use premix combustion to reduce flame temperatures, thereby avoiding significant production of thermal NO_x. This approach to NO_x reduction is very effective, but the premixed flame is very prone to dynamic oscillations. Furthermore, the absence of combustion dilution holes in premixed systems provides little opportunity to dampen acoustic waves generated by the combustion. For these reasons, dynamics often hinder both the development and operation of premixed systems. Although premixed combustors have now been successfully commercialized in many instances, changes in fuel type, ambient conditions, or even engine wear can require adjustments to flow splits, power output, etc., to avoid dynamics. Thus, the operating margins for premixed systems are sometimes restrictive, and new techniques to stabilize premix combustion are needed. A recent review by Mongia et al. [1] provides more background.

Active control is a promising method to stabilize premixed combustion. As typically proposed, active control uses fuel modulation to adjust the dynamic response of the flame so that the feedback loop between heat release and acoustics is dynamically stable. The most common approach is to modulate the fuel at the frequency of any observed oscillations and control the phase to produce stability. This approach has been tested in various combustion test rigs [2–5]. This closed-loop approach has the advantage that the feedback can be adjusted to variable dynamic response with changes in operating conditions, fuel type, etc. A potential drawback is that the fuel needs to be modulated at the oscillating frequency and with adequate control of the modulation phase. Where oscillation frequency approaches 1 kHz, modulation places a significant mechanical demand on the fuel modulation valve and this has been the motive to develop subharmonic actuation [5]. Because stationary turbines will operate thousands of hours between maintenance, valve life is an issue for high-frequency control strategies. This issue is complicated by the requirement that valve modulation must produce fuel modulation at the point of premixing with desired phase and gain. This means that the fuel modulation valve should be located in the fuel injector, a hostile environment. Alternatively, the modulating valve can be located in a cooler location [6], but the connecting piping must have a specified acoustic impedance. This latter approach limits the actuating response at other frequencies. The tests in Sueme et al. [6] are the only prior tests carried out on a complete gas turbine engine.

Open-loop fuel modulation is an alternate approach to active control. By repeatedly modulating the fuel flow, oscillations can be dampened because the feedback loop is disrupted by the imposed modulation. Because the fuel modulation is not phased with the observed pressure oscillations, the fuel control valve requirements are simplified. Likewise, if modulation is successful at low frequencies, the cyclic life requirements of the valve are comparable to those in reciprocating gas engine fuel injectors. As an alternative to modulating the fuel flow, McManus et al. [7] showed that open-loop modulation of the shear layer in a step-stabilized flame could be used to control combustion dynamics. In a similar manner, Uhm and Acharya [8] investigated open-loop modulation of an air-jet aimed at the flame base in a laboratory swirl-combustor. The intermittent disruption at the base of flame controlled oscillations without compromising the flame-holding.

Richards et al. [9] demonstrate that it is possible to control oscillations with a low-frequency modulation of a pilot flame. The approach used a commercial valve to modulate the flow of fuel to a pilot flame and showed that natural oscillations could be significantly reduced by open-loop fuel modulation. A theoretical investigation by Prasanth et al. [10] and CFD analysis by Smith and Cannon [11] explained some of these results. Pashcereit et al. [12] showed that open-loop modulation of either the pilot or main fuel flow could suppress combustion dynamics in a premixed combustor.

Recently, researchers at Georgia Tech [13] have investigated open-loop fuel modulation as a method to control large amplitude combustion oscillations. Again, the idea for control was based on

Contributed by the Combustion and Fuels Division of ASME for publication in the Journal of Engineering for Gas Turbines and Power. Manuscript received by March 11, 2005; final manuscript received March 16, 2006. Review conducted by P. C. Malte.

 Copyright © 2007 by ASME

Downloaded 23 Jan 2009 to 129.137.5.42. Redistribution subject to ASME license or copyright; see http://www.asme.org/terms/Terms_Use.cfm

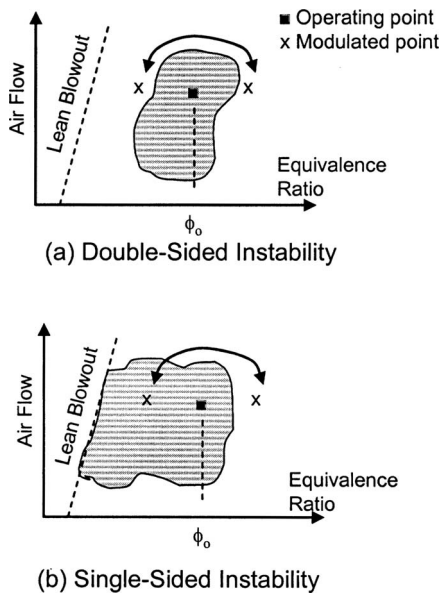

Fig. 1 Schematic of instability regions showing how fuel modulation can affect instability: (*a*) double-sided instability and (*b*) single-sided instability

the understanding that fuel modulation disrupts the feedback loop that drives oscillations. McManus et al. [14] report successful attenuation of premixed combustion oscillations using open-loop fuel modulation in a turbine combustor rig. As a side benefit, these authors showed that open-loop fuel modulation can extend the lean-blowout limit when compared to steady fuel injection.

Richards et al. [15] demonstrated oscillation control using open-loop modulation of the premix fuel flow. These authors showed that equivalence ratio modulation can successfully control oscillations when the stability map includes isolated islands of oscillations. The concept is shown in Fig. 1(*a*). The combustor behavior is plotted as a function of equivalence ratio and average air flow. As shown, oscillations may be confined to a specific region on this plot (shaded). If the desired operating point is inside this region, the combustor will oscillate. It is demonstrated [15] that fuel modulation can be used to alternate the combustor equivalence ratio between stable operating points which span the oscillating region. In this manner, the time average equivalence ratio is the desired operating point, but the instantaneous value is one of the stable operating conditions. Assuming that the imposed heat release modulations can be tolerated by downstream hardware, this technique can be used to stabilize combustion oscillations. Tests on a 30 kW laboratory combustor showed that a 300 Hz instability could be stabilized by modulating the fuel at frequencies of $<$20 Hz. The success of this technique depends on the time required for oscillations to develop during the transition between the left and right stable points, so that the results are specific to the combustor studied.

The instability shown in Fig. 1(*a*) is referred to in this paper as "double sided" because the oscillating region is bounded on both sides by stable conditions. For practical purposes, many instabilities are "single sided," meaning that the stability boundary divides stable from oscillating conditions, with no stable region on the opposite side of the stability boundary. In this case, modulating the equivalence ratio simply moves the combustor from stable to oscillating conditions; this has been demonstrated [15]. Thus, successful control using the fuel modulation concept would appear to be limited to double-sided instabilities. This limits the potential application to a small number of situations, since many practical dynamics problems are single sided.

To address this limitation, it is useful to recognize that turbine engine combustors usually use multiple fuel injectors. In these

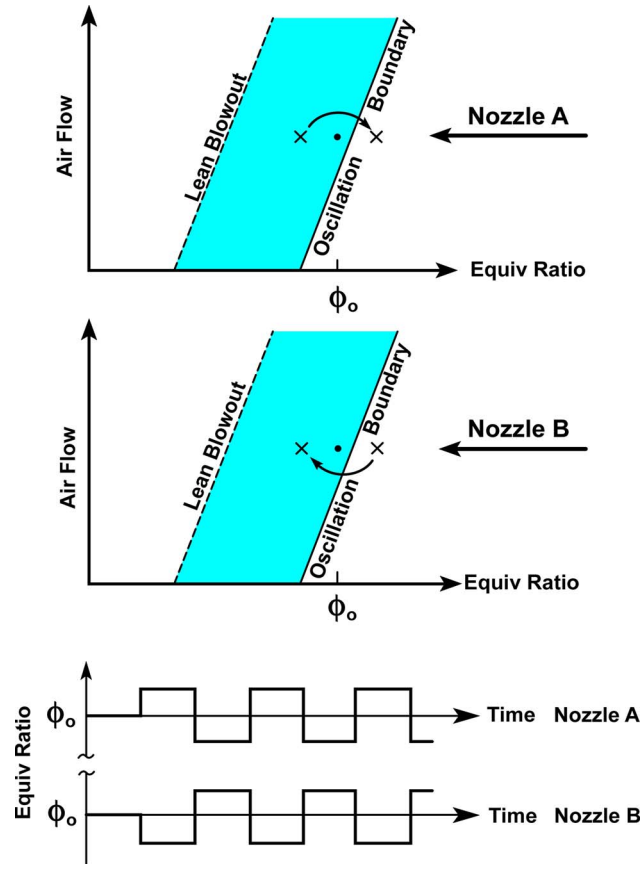

Fig. 2 Schematic of fuel modulation on two injectors, nozzles A and B

applications, it is conceivable that pairs of injectors can be modulated out of phase. The concept is shown in Fig. 2. Lean blowout is indicated by the dashed line on the left of the shaded oscillation region. The desired, time-average equivalence ratio ϕ_0 is shown inside the oscillation region. Referring to the time history of the equivalence ratio for injector A, the fuel is modulated to produce a square-wave history with an average value ϕ_0. Fuel modulation is also occurring on injector B, but the square wave is 180 deg out-of-phase with injector A. Thus, although injector A is operating with a stable equivalence ratio, injector B is operating at an unstable condition. The two injectors switch conditions at the modulation frequency, making B stable, while A is unstable. Using this approach to fuel modulation, at least one-half of the engine injectors are operating at stable conditions compared to the uncontrolled situation. Although this does not guarantee stability, it provides an excellent option for reducing the magnitude of combustion driving, and may warrant consideration on engine applications known to have single-sided instabilities. As will be shown, the frequency of fuel modulation can be relatively low for successful control, meaning that commercial fuel modulation valves can be used and located in the existing fuel piping. These concepts are explained further elsewhere [16] where the concept of periodic equivalence ratio modulation is given the acronym PERM.

To demonstrate the success of the PERM concept, it is necessary to test a combustor with multiple fuel injectors. For practical use, it is also necessary to evaluate the effect of PERM on pollutant emissions, and consider any collateral effects on the engine systems. This paper demonstrates the successful use of PERM on a gas turbine engine using 12 fuel injectors. The tests were carried out in a Cooperative Research and Development Agreement between Solar Turbines Inc. and the United States Department of Energy's National Energy Technology Laboratory. Results show

Downloaded 23 Jan 2009 to 129.137.5.42. Redistribution subject to ASME license or copyright; see http://www.asme.org/terms/Terms_Use.cfm

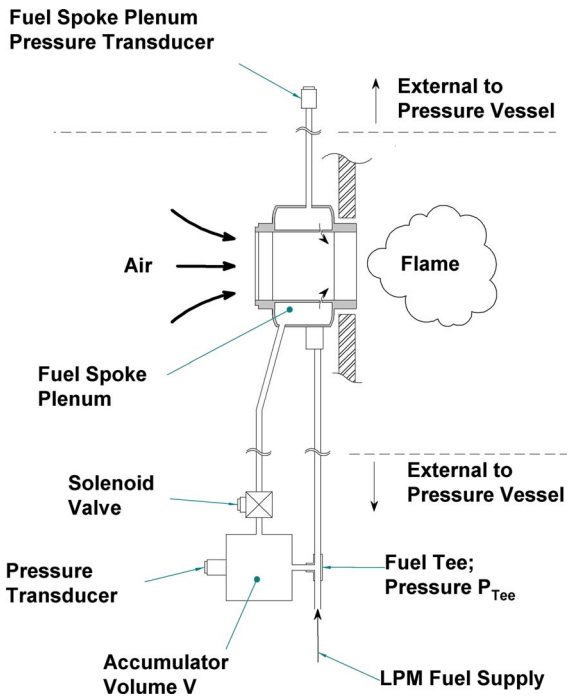

Fig. 3 Schematic of the fuel injector and hardware used to generate and quantify pulses in the single-injector combustion rig

that PERM was relatively easy to implement on a commercial engine platform, and demonstrated good control of combustion oscillations.

2 Single Fuel Injector Modulation Development

Before conducting complete engine tests, significant effort was made to develop and test the fuel modulation on a single fuel injector. Figure 3 shows a schematic of the fuel injector flow path with a solenoid and accumulator added to the baseline configuration. Note that when the solenoid is opened, there are two paths for fuel flow. Fuel flows from the accumulator into the premixer, momentarily increasing the fuel flow while the accumulator and supply pressure bleed down to new steady-state values. The two flow paths are set up with internal orifices so that the flow rate down each leg is established by the pressure drop along each path. If the solenoid is modulated, the pressure in the accumulator rises and falls with the fuel flow. As in Richards et al. [15], the variation in fuel flow can be calculated by measuring the accumulator pressure as follows. A control volume equation for mass conservation in the accumulator volume V is written as

$$\frac{d}{dt}(\rho V) = \dot{m}_{\text{in}} - \dot{m}_{\text{out}} \tag{1}$$

where the mass flow in and out of the accumulator are identified by the respective subscripts on the right, and the density is ρ. Assuming that the pressure P in the accumulator can be described by isentropic compression and expansion of the fuel with specific heat ratio γ, then $P\rho^{-\gamma}$=constant, and Eq. (1) can be rewritten

$$\frac{V}{c_0^2}\frac{dP}{dt} = \dot{m}_{\text{in}} - \dot{m}_{\text{out}} \tag{2}$$

where c_0 is the speed of sound in the fuel at the operating temperature. Ignoring the small volume of fuel stored in the connecting lines, Eq. (2) can be used to measure the variation in fuel flow by simply measuring the pressure in the accumulator. The terms on the right do not need to be individually determined. The difference between what is going in and out of the accumulator represents the fuel that is stored in the accumulator, and therefore not sent to the fuel injector. In this manner, Eq. (2) was used to calculate the size of fuel modulation from the slope of the accumulator pressure signal.

As shown in Fig. 3, an additional pressure transducer was added to the plenum that supplies the individual fuel jets that supply fuel to the premix air. Pressure measurements at this point can be used to further verify the size of pulses delivered to the premixing passage and provides a direct check on the pulse generation hardware. It was also possible to estimate the size of the fuel pulses by measuring the steady flow coefficients of the various flow paths with the solenoid open or closed, and then treat the problem as quasi-steady flow for the solenoid open, or closed. This approach compared within 10% of the measured accumulator pressure and showed that a quasi-steady model could be used to describe the flow modulation. This result is important for the actual engine installation (Sec. 4), where it was desired to avoid using an accumulator. The pulse hardware was designed to modulate the fuel flow by approximately ±12% of the average equivalence ratio. This value of modulation was selected based on initial testing (not described here) where the quantity of modulated fuel was studied, and it was shown that the target 12% produced adequate modulation of the flame for this fuel injector. Higher or lower modulation values could be studied (and, in some instances, were effective) by simply adjusting the orifices in the flow passages of Fig. 3.

The fuel solenoid was a commercial valve manufactured for natural gas injection in stationary reciprocating engines. The valve was rated to operate at modulation frequencies as high as 125 Hz, with a lifetime of several years in natural gas engine applications. The frequency response of the valve was tested by recording the pressure signals described in the preceding paragraph. It was found that the frequency response was essentially flat over the operating range. As noted above, the predicted and measured accumulator pressures agreed within 10% using a quasi-steady model for fuel flow, affirming the flat frequency response.

3 Experimental Combustion Tests Modulating a Single Fuel Injector

The fuel injector in Fig. 3 was installed in a single nozzle, can-type combustor at the National Energy Technology Laboratory. The combustor has been described elsewhere [17] and is shown in Fig. 4. Facilities at the National Energy Technology Laboratory can supply 1.4 kg/s, unvitiated air at temperatures up to 800 K, with maximum test pressures up to 30 atm. These capabilities allowed single fuel injector testing at temperatures, pressures, and flow rates which existed on the actual engine installation.

Referring to Fig. 4, air enters the inlet plenum at the left, and passes though the fuel nozzle where natural gas is premixed. Combustion is stabilized in the 19.8 cm (7.80 in) cylindrical combustion zone. The combustion zone walls are water cooled, and there are no dilution ports or cooling holes. The combustion products flow through a refractory plug that forms an exhaust neck (10.5 cm i.d., 22.9 cm length). This neck provides acoustic and flow boundaries that are representative of the actual engine installation. Baseline testing demonstrated that the combustor exhibited oscillations with frequencies comparable to those observed on the engine. An *exact* correspondence between oscillating conditions on the engine, and the test rig was not achieved, but the similarities were close enough to allow development. Cohen et al. [18] explain the complication of reproducing observed engine oscillations on a corresponding single-nozzle test rig. For these tests, there was no need to precisely duplicate oscillating behavior on the single-nozzle rig because subsequent testing was carried out in the complete engine (Sec. 4).

After leaving the exhaust neck, combustion products were quenched with a water spray to <475 K to minimize any postquenching reactions. The resulting products were sent to a

Downloaded 23 Jan 2009 to 129.137.5.42. Redistribution subject to ASME license or copyright; see http://www.asme.org/terms/Terms_Use.cfm

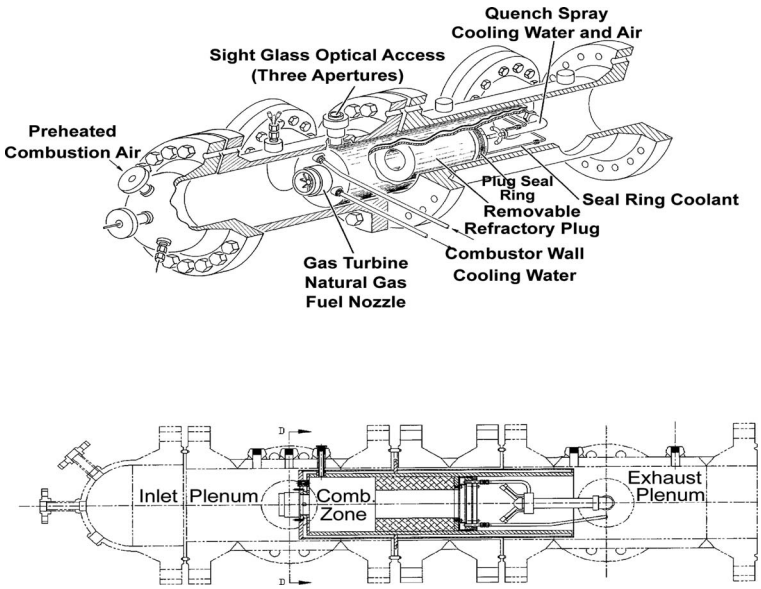

Fig. 4 Schematic of combustor used for single-injector test of fuel modulation

stack where a back-pressure control valve was used to establish the operating pressure. Pollutant emissions were measured in the exhaust stack downstream of the water spray.

The following instrumentation was used to record the test results. Dynamic pressures were recorded in the combustion zone using a Kistler model 206 dynamic pressure transducer, mounted outside the vessel on an infinite coil transmission line. Pressure in the fuel accumulator (Fig. 3) was also recorded with a Kistler model 206, mounted directly into the wall of the accumulator vessel. The combustion heat release perturbations were recorded with a fiberoptic probe, located 2.54 cm downstream of the combustion zone dump plane, viewing across the combustor centerline. The ultraviolet light generated by OH^* chemiluminescence (310 nm) can be used to monitor the variation in combustion heat release [19]. The light collected by the probe was passed through an optical interference filter, and focused on a photomultiplier to produce the heat release signal. The probe position did not provide a complete view of all the flame, but gave a qualitative picture of variations in the heat release as shown next.

The bulk air flow rate is defined by a reference velocity V_r, which is the mass flow divided by the inlet density and fuel nozzle cross-sectional area. Combustor testing was carried out at 7.8 atm pressure, two inlet air temperatures (533 K and 588 K), two reference velocities (V_r=59 m/s and 69 m/s), and a range of equivalence ratios ϕ. Results presented here are chosen as representative of the behavior observed during these tests. For reference, the operating conditions for the following figures are presented in Table 1, along with the NO_x and CO ratios discussed later.

Figure 5 presents the time history of various parameters at the test conditions indicated in Table 1. This is a baseline condition, without fuel modulation. The combustor pressure is shown on the top graph and indicates a strong oscillation at 240 Hz. The fuel manifold (spoke plenum, Fig. 3) pressure also oscillates, demonstrating the acoustics oscillations penetrate into the fuel delivery system, but are attenuated compared to the combustor pressure. Without fuel pulsing, the accumulator pressure is characterized by very low amplitude oscillations. The heat release signal from OH^* shows the oscillation in combustion that is driving the combustion dynamics. Finally, the lower graph shows the signal to the modulating solenoid, which is closed in this baseline condition.

Table 1 Test Conditions and Observed Emissions Ratios for Figs. 5–8.

Fig	V_r	ϕ	control action	CO ratio	NO_x ratio
5	69	0.55	baseline	1	1
6	69	0.55	10 Hz	~1	1.4
7	59	0.63	5 Hz	~1	1.16
8	59	0.56	5 Hz	42	2.15

When the fuel pulsing is activated, the oscillating history changes dramatically. Figure 6 shows the result of open-loop fuel pulsing at the same conditions as Fig. 5. Fuel pulsing was carried out at 10 Hz. At these conditions, the oscillating combustor pressure is dramatically modulated by the fuel pulsing. Noting the discussion concerning Eq. (2), the slope of the accumulator pressure indicates the fuel flow rate such that the equivalence ratio is higher when the accumulator empties and the pressure slope is negative. Thus, oscillations decline as the fuel flow from the accumulator increases the equivalence ratio, and the oscillations grow again as the solenoid closes. The OH^* signal shows that the oscillation in heat release is almost eliminated during a portion of the modulation cycle. These results are consistent with the description of single-sided combustion instability provided in Fig. 1, and demonstrate that this type of instability can only be turned on and off, but not eliminated by fuel modulation on a single fuel nozzle. However, actuation of multiple injectors in an engine may still produce control as shown in Sec. 4.

It is emphasized that the effect of fuel modulation on oscillations was very dependent on the operating conditions. In some instances, fuel modulation had very little effect on the observed oscillation. For example, Fig. 7 shows the effect of fuel modulation at different conditions than in Fig. 6. The fuel modulation produced little effect on the baseline oscillation. The baseline oscillation without control is not shown because it is very similar to that with control. Note that the lower limit of the OH^* signal rises and falls slightly with the fuel modulation, but the oscillation is almost unaffected. In this case, the fuel modulation is unsuccessful in moving the operating condition to a stable point as described in Fig. 1. As another example, Fig. 8 shows the effect of fuel pulsing at a lower average equivalence ratio than Fig. 7. At this condition, the oscillation is clearly interrupted by the control action. Note that the OH^* signal indicates that the flame is momentarily absent from the probe field of view—the flame is lifted

Downloaded 23 Jan 2009 to 129.137.5.42. Redistribution subject to ASME license or copyright; see http://www.asme.org/terms/Terms_Use.cfm

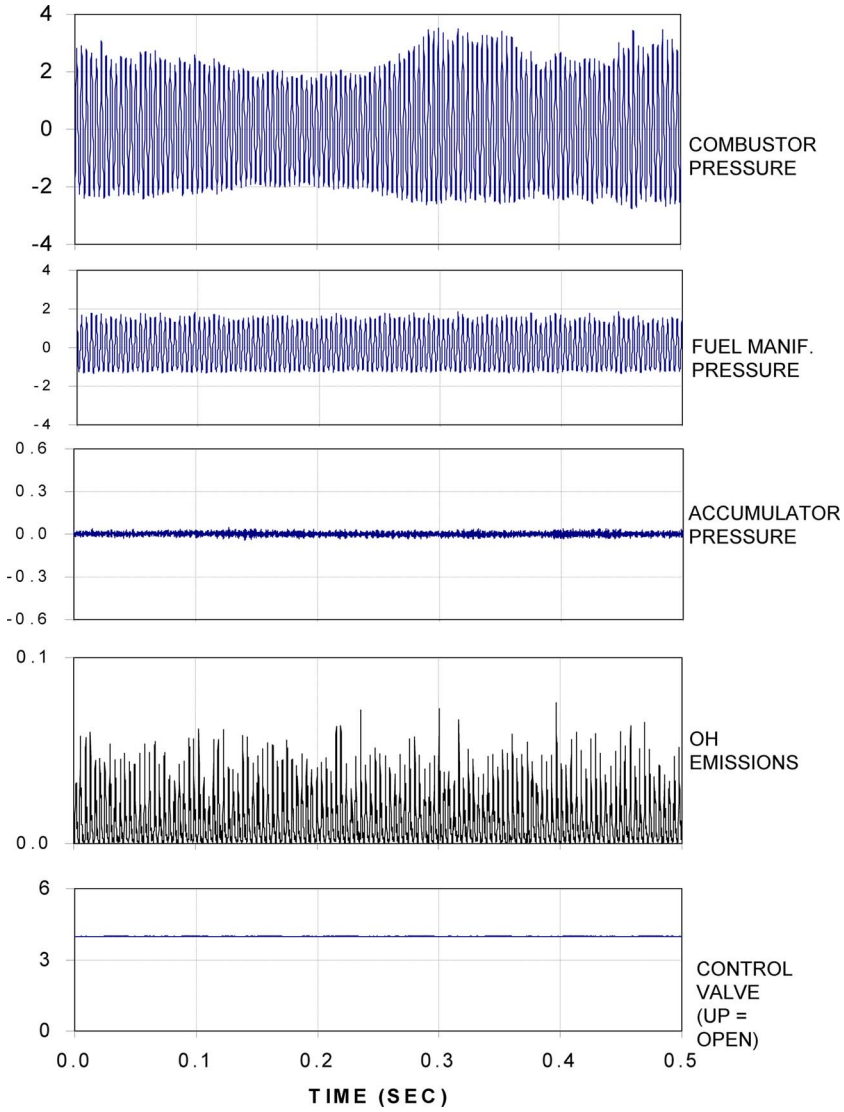

Fig. 5 History of various signals at conditions indicated in Table 1. This is the baseline, without fuel modulation (pressures in pounds per square inch).

as the equivalence ratio drops. Depending on the operating conditions, these results demonstrate that the PERM technique can significantly disrupt the flame anchoring. This may be a disadvantage because it could promote flame blowout, yet the flame was easily maintained in the present tests.

Pollutant emissions were recorded during the control cases described above. Table 1 reports the *ratio* of NO_x and CO emissions between the baseline and the modulated cases. In most cases, the effect of fuel modulation was an increase in the NO_x. The CO emissions were almost unaffected by the fuel modulation, except at the leanest operating condition, where the CO was dramatically increased. Noting the discussion of flame anchoring above, fuel modulation near the lean blowout may not be practical due to CO emissions and flame anchoring. These results are readily understandable. At higher equivalence ratios, the fuel modulation produces momentarily richer fuel pockets, which can produce hot transients that contribute to NO_x. As will be seen later, the emissions response in the engine application was quite different.

In summary, tests of the single fuel nozzle demonstrated that PERM could disrupt single-sided instabilities as described in Fig. 1. The effect on emissions was modest, except near the lean extinction, where problems in flame anchoring and high CO emissions may limit the application of this control technique.

4 Experimental Tests on a Gas Turbine Engine

Engine testing was carried out on an experimental test engine located at Solar Turbines. The combustor was an annular geometry, using 12 premix fuel nozzles. Figure 9 shows a cross-section of the combustor, identifying the fuel injectors and eight dynamic pressure transducers (PT-1 through PT-8). The open circles represent the position of the premixing passages supplying the combustor annulus. Two of the pressure transducers were mounted on the fuel supply lines to monitor the dynamic affects of the control pulses on the fuel manifold and the flow passage downstream of the modulating solenoid valve. These signals could be used to affirm the magnitude of the flow modulation. The remaining six pressure transducers (PT 1,2,4,5,7) were distributed around the perimeter of the combustor so that an root-mean-square (rms) pressure could be determined as an average of the six transducers. It was important to consider measurement of multiple transducers because tests without control showed that fixed acoustic nodes could be established in the annular geometry. Thus, a single-pressure measurement might provide a false picture of the amplitude of the oscillation.

As in the single-nozzle testing, a fiberoptic probe was used to record the OH chemiluminescence signal from a position 2.5 cm

Downloaded 23 Jan 2009 to 129.137.5.42. Redistribution subject to ASME license or copyright; see http://www.asme.org/terms/Terms_Use.cfm

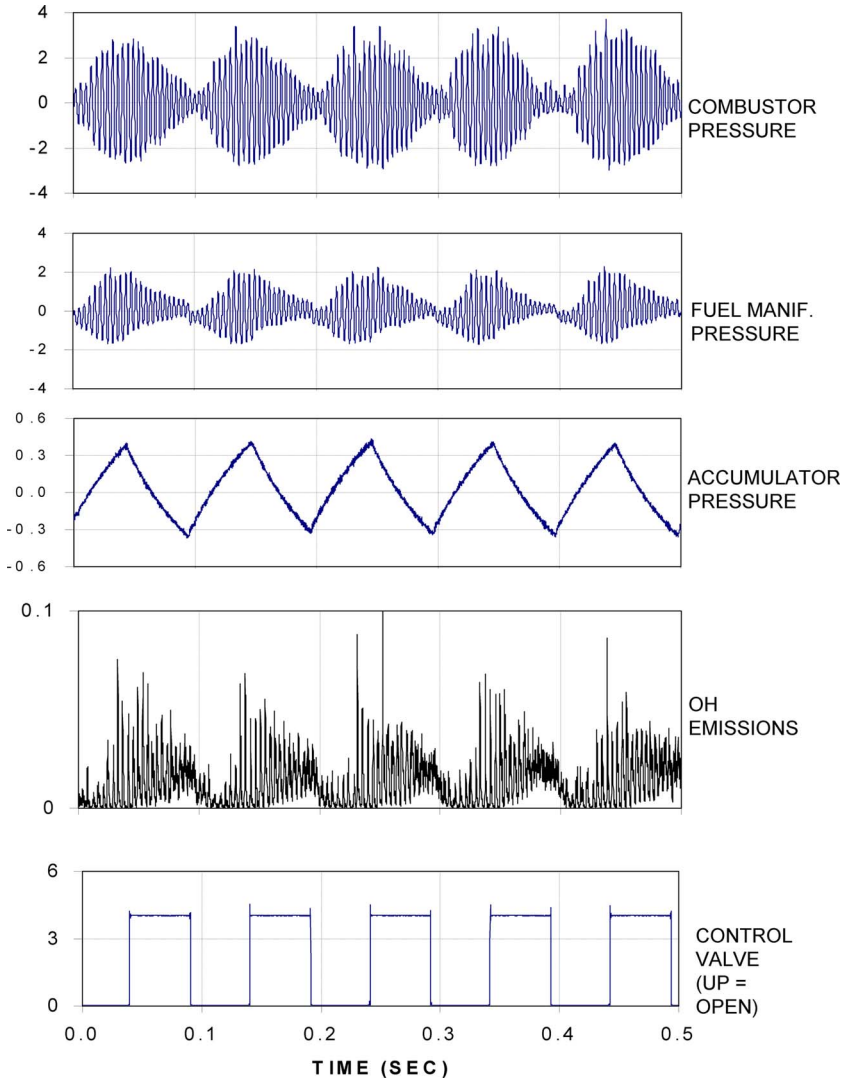

Fig. 6 History of various signals at conditions with fuel modulation. Same operating conditions as in Fig. 5, (pressures in pounds per square inch).

downstream of the injector face on fuel injector 2 (Fig. 9). This signal was used to verify the imposed heat release variations.

The fuel pulsing hardware was similar to that in Fig. 3, except that the fuel accumulator was absent. As explained in Sec. 3, testing with the fuel accumulator was used to quantify the unsteady flow rates produced by modulating one flow path but was not needed in the engine tests. All 12 injectors were outfitted with a solenoid and flow path similar to Fig. 3.

When PERM is activated, the open solenoids present added flow area for the gaseous fuel. If the throttle position were unchanged, this larger flow area would increase engine fuel flow. However, the engine control system still retains control of the fuel flow, so that the added flow area is readily compensated by a (slight) reduction in engine throttle position, so as to maintain the same engine power level before and after control is activated. During the transition between uncontrolled and controlled status, no problems were encountered with engine operation, flame out, or high turbine inlet temperatures.

Figure 10 is a schematic of the test cell instrumentation and control wiring. The solenoid valves were powered by a 12 V/48 amp power supply. Control signals activated the solenoid coils via a powered integrated circuit switch supplied by the solenoid. Control signals (TTL) were generated by the control computer software developed for this application. The control software was designed to allow rapid transition between various control modes and control parameters described below. The control computer also took an average of the six dynamic pressure transducers to calculate the rms pressures reported here. Also shown on Fig. 10, time-series data were recorded on a TEAC RD-145T digital audio tape recorder, using 16 channels with a sampling frequency of 6 kHz per channel. Pollutant emissions were recorded using standard infrared or chemiluminescent analyzers, following standard practices for engine emission measurements.

4.1 Control Modes. With 12 injectors, many different scenarios for fuel modulation exist. For example, referring to the numbering scheme on Fig. 9, modulation can increase the fuel flow on the even-numbered injectors, and then alternate with the odd-numbered injectors. Alternatively, one can increase the fuel flow on injectors 1–6, and then alternate with injectors 2–7, then 3–8, and so on. This latter scenario would produce a higher equivalence ratio in half of the combustor annulus, rotating at the modulation frequency. Compared to modulating odd-even, this would minimize the interaction between adjacent injectors, insuring that the high equivalence ratio on one injector was not impacted by leaner conditions from adjacent injectors.

In addition, scenarios are possible where a reduced number of

Downloaded 23 Jan 2009 to 129.137.5.42. Redistribution subject to ASME license or copyright; see http://www.asme.org/terms/Terms_Use.cfm

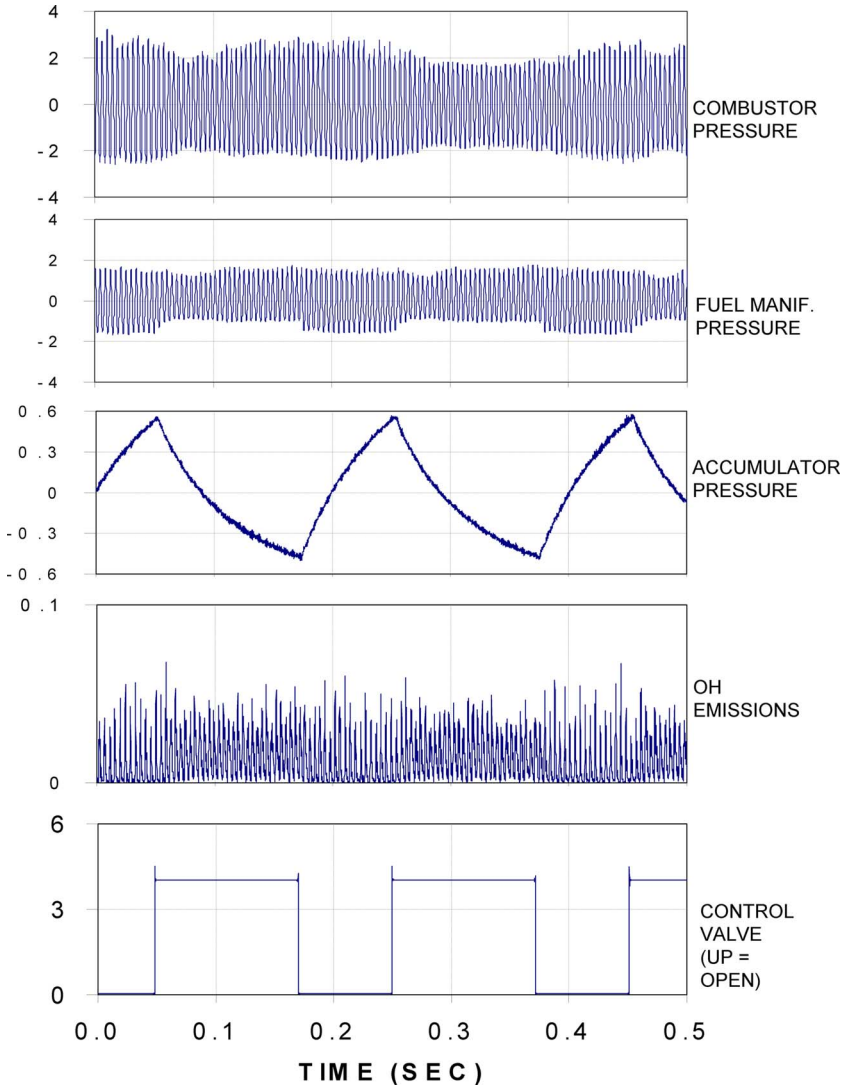

Fig. 7 History of signals at conditions (Table 1) where fuel modulation had little effect on the oscillation (pressures in pounds per square inch)

injectors are modulated. For reference, the term "overlap" will be used to describe the number of injectors where the solenoids are simultaneously open. The odd-even modulation describe above is therefore six-overlap because at any point in time, six solenoids are open.

As an example of four-overlap, one can modulate the fuel flow in just four injectors (1,4,7,10) and then switch to four more (2,5,8,11), and finally to the remaining (3,6,9,12). If control is successful modulating a reduced number of injectors, the impact on emissions may be reduced.

Thus, a case can be made for considering many different modulation scenarios. Testing on the engine was carried out with five different modulation scenarios, and overlap values of 1, 2, 4, and 6. Rather than describe all these different situations, this paper presents just a single-control scenario (odd-even). Testing other scenarios revealed that the control effects were qualitatively similar *as long as they used six-overlap modulation*. In other words, it was found that control of the baseline oscillation was only successful when six injectors were modulated together. Any arrangement of modulating the injectors with less than six-overlap was not able to produce control of the baseline oscillation.

4.2 Results of Engine Testing. The solenoids were modulated over a range of frequencies, using the odd-even scheme described above. Testing was conducted near full-load engine conditions, where dynamic oscillations were observed. Unlike the single-injector tests (Sec. 3) the engine testing was conducted with a small premixed pilot flame (~2% of the fuel) used to maintain flame anchoring. Figure 11 shows a graph of the RMS pressure, and the CO and NO_x emissions. As explained above, the rms was an average of the six combustor pressure transducers and was expressed as a percentage of the combustor operating pressure. The CO and NO_x emissions were normalized by the baseline value measured before the control action was activated. Figure 11 shows results at modulation frequencies ranging from 10 to 96 Hz. The 24 Hz, 48 Hz, and 96 Hz cases were tested because these frequencies were integral divisors of the main oscillation (288 Hz). It was desired to insure that the fuel modulation did not provide subharmonic driving of the combustor acoustic modes (which it did not).

Inspecting the graph, the effect of fuel modulation at any frequency is almost a threefold reduction in the rms pressure. The effect on NO_x is also very encouraging, demonstrating a modest *reduction* as control is actuated. However, the CO emissions rise unacceptably for modulation frequencies of <80 Hz, increasing by more than a factor of 4. At higher modulation frequencies, the CO is increased over the baseline by approximately a factor of 2,

Downloaded 23 Jan 2009 to 129.137.5.42. Redistribution subject to ASME license or copyright; see http://www.asme.org/terms/Terms_Use.cfm

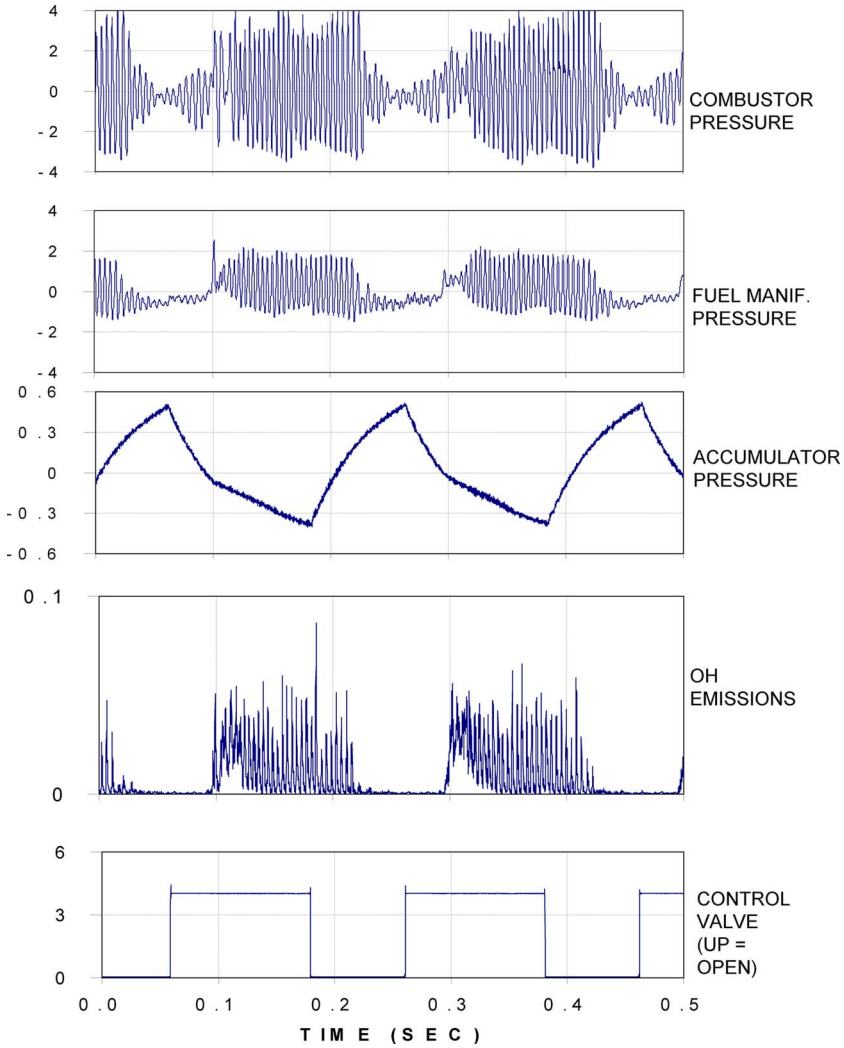

Fig. 8 History of signals at conditions (Table 1) where the flame anchoring was disrupted by the control action

while both the rms pressure and the NO_x levels remain lower than the baseline. The emissions behavior is discussed in more detail later, but it should be noted that both NO_x and CO emissions can depend on the presence or absence of oscillations. Thus, there is a compound effect on emissions from both the fuel modulation, and the control of the oscillation.

Tests with different modulation patterns discussed in Sec 4.1 showed comparable behavior. As long as the test used six-overlap (i.e., six solenoids open at any time), the combustor oscillation was controlled. During the controlled condition, the NO_x was comparable or less than the baseline, but the CO was always higher than the baseline. The CO level dropped with increasing modulation frequency, but was still at least a factor of two larger than the baseline. In addition, tests with duty cycles of $<50\%$ were also conducted, i.e., where the solenoids were opened for $<50\%$ of the period of modulation. As in lab scale tests described in [15], the reduced duty cycle was less effective at controlling the rms amplitude and is not reported here.

It is helpful to consider that time history of the oscillation. Figures 12(*a*) and 12(*b*) compare (i) the baseline condition in Fig. 11 with (ii) the fuel modulation at 40 Hz. Refer to Fig. 9 for the location of the various signals. In Fig. 12(*a*) the combustor pressure recorded from PT-1 and PT-2 show the baseline oscillation. Note that these pressures are located 60 deg apart on the liner (Fig. 9) and have different amplitudes because a fixed standing

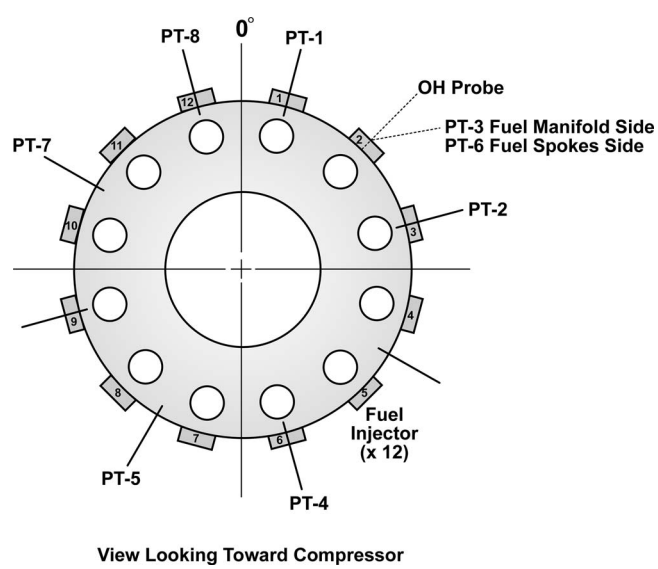

Fig. 9 Cross section of the engine combustor annulus. The fuel injector and pressure transducer (PT) numbering scheme is shown.

Downloaded 23 Jan 2009 to 129.137.5.42. Redistribution subject to ASME license or copyright; see http://www.asme.org/terms/Terms_Use.cfm

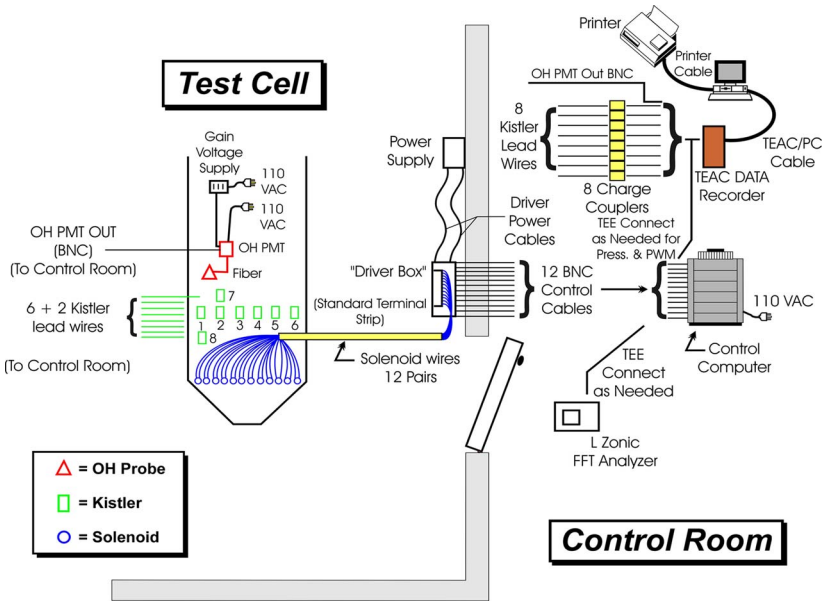

Fig. 10 Schematic of test cell and instrumentation layout

wave in the annulus of the combustor. The OH^* signal reflects the well-organized variation in heat release that drives the oscillating pressure. Considering Fig. 12(*b*) the solenoids are activated. For reference, the lower two traces show the odd-even actuation between injectors 2 and 3. Compared to Fig. 12(*a*) the oscillating pressure amplitudes are dramatically reduced, and the well-organized OH^* oscillation is appreciably disrupted. The large amplitude variation in heat release (measured at injector 1) is synchronized with the odd solenoid opening (injector 3 shown here). It should be noted that some organized oscillations persist in the combustor, but at much reduced amplitude. Compared to tests conducted in the single-nozzle experiments (Sec. 3), the OH^* signal does not indicate any problems with flame liftoff during the control event, but as noted, the CO emissions were undesirably high.

To further explore how control is achieved in this system, a separate test was conducted to evaluate what happens if the individual injectors were operating at constant, but different, equivalence ratios. This could be accomplished by simply opening the solenoids on the odd-numbered injectors (i.e., not modulating). In this manner, the odd-injectors would operate at the higher equivalence ratio, and the even-injectors would operate at the lower equivalence ratio. Referring again to Fig. 2, this could place nozzle A in a stable region, and nozzle B in an oscillating region.

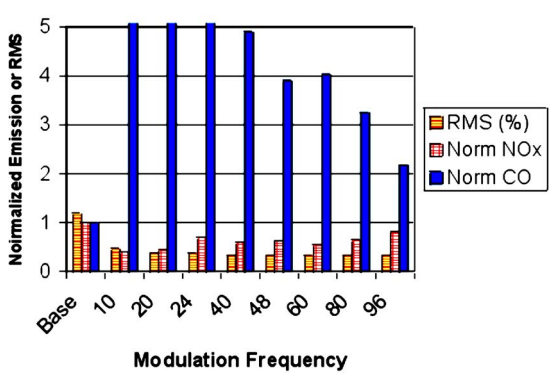

Fig. 11 Rms pressure (% of combustor pressure) and normalized emissions at the baseline condition, and with fuel modulation at various frequencies

Figure 13 shows the result of this test. The baseline rms and emissions are compared to what happens as the odd-numbered injector solenoids are progressively opened. Both the rms pressure and the CO emissions rise as the injectors are activated. As noted in Richards et al. [15], the PERM concept relies on modulating fast enough to avoid development of oscillations at any one operating condition. These data support the hypothesis that modulation is necessary to produce control, i.e., it is not adequate to simply operate the different fuel injectors at different values of ϕ. Figure 13 also shows the remarkable sensitivity of CO to changes in the fueling distribution. Activating even one solenoid produced a fourfold increase in CO, suggesting that some partial combustion products are being quenched downstream of the richer fuel injector. The drop, then rise, in CO as injectors 3 and 5 were activated was not spurious. Similar trends were observed when a comparable test was conducted activating injectors 1–6 in a sequential manner. In practical turbine combustion liners, it is widely recognized that CO emissions can be complicated by quenching in uncontrolled dilution air jets. Because this liner used a number of additional drilled holes for the optical OH probe, and pressure probes, air leaking around these ports may increase the CO levels.

It is important to note that the CO levels themselves depend on the presence of the oscillation. Thus, comparing the CO levels with and without modulation also compares the CO levels with and without the presence of strong oscillations. To show that the CO was not completely determined by the fuel modulation, a test was conducted with fuel modulation on an otherwise stable combustion condition. Figure 14 shows the result of fuel modulation at an engine condition where the baseline combustion is stable. Note that the rms pressure is not affected by the fuel modulation so that the increased CO is not attributed to the control of the oscillation. The fuel modulation at lower frequencies again produces an increase in CO emissions, but it is not as dramatic as in the cases where oscillations were eliminated by the control action. At the highest modulation frequency, the normalized CO was just 1.3 compared to the baseline. As in the control cases, the NO_x emissions actually decrease with the fuel modulation. This interesting effect on NO_x differs from studies in the lab combustor (Sec. 4), where fuel modulation almost always produced a modest increase in NO_x emissions. There are differences between the single-nozzle testing and the engine testing. The engine configuration has adjacent flames, liner cooling flows, and a stabilizing

Downloaded 23 Jan 2009 to 129.137.5.42. Redistribution subject to ASME license or copyright; see http://www.asme.org/terms/Terms_Use.cfm

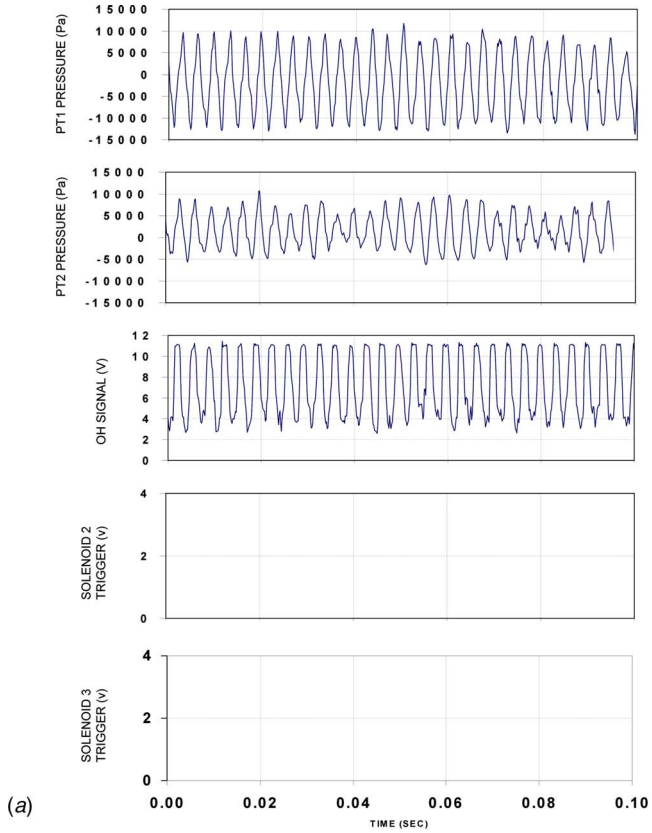

(*a*)

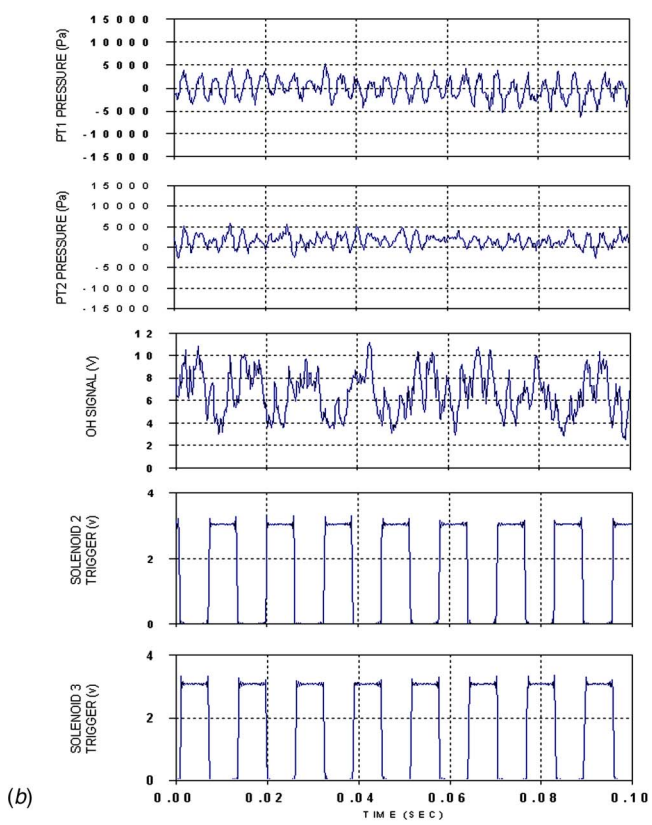

(*b*)

Fig. 12 (*a*) Baseline dynamics at conditions of Fig. 11. Note the solenoid trigger signals are not active. (*b*) Observed dynamics with odd-even fuel modulation activated at 40 Hz. Note the odd-even activation of solenoid triggers 2 versus 3.

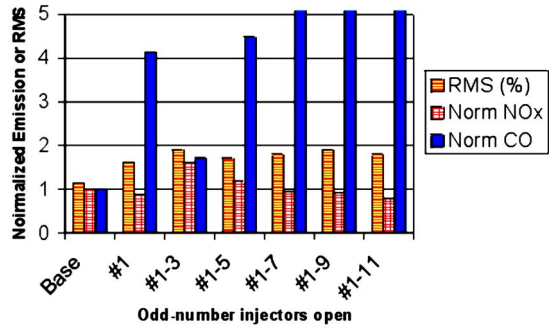

Fig. 13 Rms pressure and emissions for steady solenoid valve opening on odd-numbered injectors. The labels are inclusive (i.e.; injectors 1–7=1, 3, 5, 7, etc.).

pilot flame. However, these differences do not provide a clear explanation for the reduced NO_x observed during engine fuel modulation. As in the single-nozzle testing, it seems likely that momentary excursions to higherequivalence ratio should produce slightly more NO_x not less. More investigation is needed to understand this effect.

The promising control results presented here must be tempered by the recognition that PERM control cannot work at conditions where the baseline oscillation is not disrupted by an equivalence ratio shift. This was clear from single-nozzle testing presented in Fig. 7, where PERM had virtually no effect on oscillations. Just as Fig. 14 showed that PERM did not move the combustor to unstable conditions, other engine operating conditions demonstrated that PERM would not disrupt a stubborn oscillation and could even lead to oscillations. Additional testing of the PERM concept was conducted on a second engine application that did not have well defined stability boundaries. In that case, PERM modulation had little effect on the oscillation. These results can all be justified from the presence or lack of stability boundaries shown in Figs. 1 and 2. However, lacking detailed knowledge of the stability boundaries, no definitive prediction can be made about the success of PERM without testing. Fortunately, the hardware changes needed to conduct a test are modest and do not require any changes to the internal components of the engine. Development of both reduced and detailed models are planned to further explore the control effect, and the emissions data. The encouraging results presented here justify additional theoretical and experimental investigation of this approach.

5 Summary

A concept for open-loop active control of combustion dynamics was proposed, developed, and tested on a single fuel injector test rig and on a gas turbine engine. The control concept uses periodic

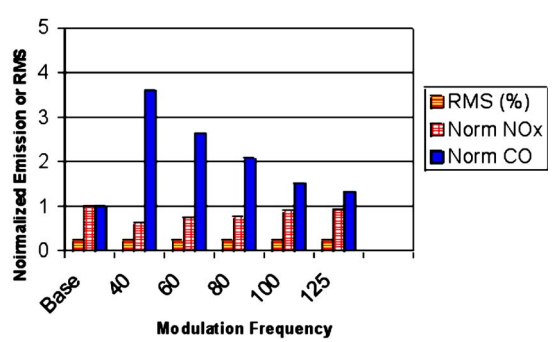

Fig. 14 Effect of fuel modulation on pollutant emissions when the engine conditions produce stable (nonoscillating) combustion

Downloaded 23 Jan 2009 to 129.137.5.42. Redistribution subject to ASME license or copyright; see http://www.asme.org/terms/Terms_Use.cfm

equivalence ratio modulation (PERM) to modulate the equivalence ratio on different fuel injectors so that at least one-half of the engine injectors are operating at stable conditions. Tests of this concept were developed on a single-injector test rig and showed that PERM could disrupt oscillations at many test conditions. Depending on test conditions, fuel modulation produced a modest increase in NO_x, and a widely variable effect on CO emissions, in the single-injector tests.

Tests on a gas turbine engine showed that PERM was relatively easy to install and operate using commercial fuel solenoids inserted in the fuel piping outside of the engine pressure casing. The fuel solenoids are designed for continuous cyclic service in reciprocating NG engines and are expected to have a lifetime of several years. No changes were made to the existing engine throttle control system. Tests demonstrated that control of oscillations required that the baseline oscillation exist near a stability boundary, such that equivalence ratio modulation could disrupt the oscillation. Engine testing showed that PERM could reduce oscillation amplitude by one-third, but with an increase in CO emissions, and a modest *decrease* in NO_x emissions. The reasons for the emissions response are not clear at this time, since single-injector testing showed that NO_x generally increased with fuel modulation. Additional modeling studies are suggested to fully explain both the control mechanism and the pollutant response.

Acknowledgment

Financial support from the U.S. Department of Energy is gratefully recognized. The technical staff at both NETL and Solar Turbines is acknowledged for helping plan and conduct this research. There are too many individual contributions to list here, but the authors wish to recognize the support of our co-workers.

References

[1] Mongia, H. C., Held, T. J., Hsiao, G. C., and Pandalai, R. P., 2003, "Challenges and Progress in Controlling Dynamics in Gas Turbine Combustors," J. Propul. Power, **19**(5), pp. 822–829.

[2] Cohen, J. H., Rey, N. M., Jacobson, C. A., and Anderson, T. J., 1999, "Active Control of Combustion Instabilities in a Liquid-Fueled Low-NO_x Combustor," ASME J. Eng. Gas Turbines Power, **121**(2), pp. 281–284.

[3] Sattinger, S. S., Neumeier, Y., Nabi, A., Zinn, B. T., Amos, D. J., and Darling, D. D., 1998, "Subscale Demonstration of the Active Feedback Control of Gas Turbine Combustion Instabilities," ASME Paper No. 98-GT-258.

[4] Johnson, C. E., Neumeier, Y., Zinn, B. T., Darling, D. D., and Sattinger, S. S., 2001, "Demonstration of Active Control of Combustion Instabilities on a Full-Scale Gas Turbine Combustor," ASME Paper No. 2001-GT-0519.

[5] Jones, C. M., Lee, J. G., and Santavicca, D. A., 1999, "Closed-Loop Active Control of Combustion Instabilities Using Subharmonic Secondary Fuel Injection," J. Propul. Power, **15**(2), pp. 1–7.

[6] Seume, J. R., Vortmeyer, N., Krause, W., Hermann, J., Hantschk, C.-C., Zangl, P., Gleis, S., Vortmeyer, D., and Orthmann, A., 1998, "Application of Active Combustion Instability Control to a Heavy Duty Gas Turbine," ASME J. Eng. Gas Turbines Power, **120**(4), pp. 721–726.

[7] McManus, K. R., Vandsburger, U., and Bowman, C. T., 1990, "Combustor Performance Enhancement Through Direct Shear Layer Excitation," Combust. Flame, **82**, pp. 75–92.

[8] Uhm, J. H., and Acharya, S., 2004, "Open Loop Control of Combustion Instability with a High-Momentum Air Jet," ASME Paper No. GT2004-53989.

[9] Richards, G. A., Yip, M. J., Robey, E., Cowell, L., and Rawlins, D., 1997, "Combustion Oscillation Control by Cyclic Fuel Injection," ASME J. Eng. Gas Turbines Power, **119**(2), pp. 340–343.

[10] Prasanth, R. K., Annaswamy, A. M., Hathout, J. P., and Ghoniem, A. F., 2002, "When Do Open Loop Strategies for Combustion Control Work?" J. Propul. Power, **18**(3), pp. 658–668.

[11] Smith, C. E., and Cannon, S. M., 1999, "CFD Assessment of Passive and Active Control Strategies for Lean, Premixed Combustors," AIAA Paper No. 99-0714.

[12] Pashcereit, C. O., Gutmark, E., and Weisenstein, W., 1999, "Control of Combustion Instabilities in a Premixed Combustor by Fuel Modulation," AIAA Paper No. 99-0711.

[13] Shcherbik, D., Neumeier, Y., Lubarsky, E., Zinn, B. T., McManus, K., Fric, T. F., and Srinivasan, W., 2003, "Suppression of Instabilities in Gaseous Fuel High-Pressure Combustor Using Non-Coherent Oscillatory Fuel Injection," ASME Paper No. GT2003-38103.

[14] McManus, K., Han, F., Dunstan, W., Barbu, C., and Shah, M., 2004, "Modeling and Control of Combustion Dynamics in Industrial Gas Turbines," ASME Paper No. GT2004-53872.

[15] Richards, G. A., Janus, M. C., and Robey, E. H., 1999, "Control of Flame Oscillations with Equivalence Ratio Modulations," J. Propul. Power, **15**(2), pp. 232–240.

[16] Richards, G. A., Janus, M. C., and Griffith, R. A., 2000, "Periodic Equivalence Ratio Modulation Method and Apparatus for Controlling Combustion Instability," U.S. Patent No. 6,059,560.

[17] Richards, G. A., and Janus, M. C., 1998, "Characterization of Oscillations During Premix Gas Turbine Combustion," ASME J. Eng. Gas Turbines Power, **120**(2), pp. 294–302.

[18] Cohen, J. M., Hibshman, J. R., Proscia, W., Rosjford, T. J., Wake, B. E., McVey, J. B., Lovett, J., Ondas, M., DeLaat, J., and Breisacher, K., 2000, "Experimental Replication of an Aeroengine Combustion Instability," ASME Paper No. 2000-GT-0093.

[19] Lee, J. G., and Santavicca, D. A., 2003, "Experimental Diagnostics for the Study of Combustion Dynamics in Lean Premixed Combustors," J. Propul. Power, **19**(5), pp. 735–750.

Downloaded 23 Jan 2009 to 129.137.5.42. Redistribution subject to ASME license or copyright; see http://www.asme.org/terms/Terms_Use.cfm