Phase Averaging of the Precessing Vortex Core in a Swirl Burner under Piloted and Premixed Combustion Conditions

D. FROUD, T. O'DOHERTY, and N. SYRED*

Cardiff School of Engineering, P.O. Box 917, The Parade, Cardiff CF2 1X4, U.K.

The flow patterns produced in and past the exhaust of a 100-KW swirl burner have been investigated experimentally under piloted premixed combustion conditions. The well-known three-dimensional time-dependent instability called the precessing vortex core (PVC) dominates the flow and mixing patterns. The PVC and its associated cycle time were used to trigger a three-component laser anemometry system. Successive cycles were overlaid and phase averaged to give a three-dimensional picture of the rotating flow fields. Measurements were obtained over successive slices of the flow, extending to $X/\mathrm{De} = 2.5$ past the burner exit. A description of the flow was thus obtained in terms of phase averaged tangential, axial and radial velocities in tangential/radial and axial/radial planes. The results confirm previously reported work on the same burner operated isothermally and show that the center of the vortex flow is displaced from the central axis of the burner, creating the PVC phenomena as the center of the vortex precesses around the central axis of symmetry. As a consequence of this displacement the reverse flow zone (RFZ) is also displaced, while also partially lagging behind the PVC by up to 180°. The RFZ acts as a feedback mechanism for the PVC phenomena. As a consequence of the displaced vortex centre, flow between the PVC centre and the wall is squeezed. Thus, due to angular momentum flux consideration, it produces a considerable increase in tangential velocity and gives the characteristic PVC signal. The displaced RFZ is both rotating through a region of forward flow whilst also being of an intermittent nature, giving rise to the excellent flame stabilisation and mixing characteristics of these types of burners. Similar results were obtained for isothermal and premixed combustion conditions providing the flame was stabilised close to the burner exit nozzle.

NOMENCLATURE

De	burner exit diameter (37.5)
PVC	precessing vortex core
RFZ	reverse flow zone
r	radius
R_e	exit radius of burner
S	geometric swirl number of burner
X	axial distance downstream from burner exit
T	temperature, °C

INTRODUCTION

The use of swirl burners for stabilising high intensity flames is well known due to their provision of flexible, adjustable RFZs, regions of high shear and mixing, good combustion characteristics and wide stability limits [1, 2].

Twenty years ago the presence of three-dimensional time-dependent coherent structures, called the precessing vortex core, in swirl burners under isothermal and premixed combustion conditions was reported by one of the authors (NS). This occurred as soon as a swirl generated central recirculation zone formed [2–4]. A classic periodic PVC pressure transducer signal obtained from the exhaust of a premixed, natural gas fired, swirl burner is shown in Fig. 1. The PVC frequency increases linearly with flowrate and is also a function of Swirl numbers, and burner configuration [2, 3, 4]. Swirl number is defined in Ref. 2. The PVC has been shown to occur under realistic operating conditions in both model and full size power station boilers fired on oil or coal [5, 6].

Recent work on characterising the PVC under isothermal conditions in the same swirl burner is reviewed here to underpin the results found under combustion conditions [5]. The burner used is shown in Fig. 2 and it was shown that the PVC phenomena occurs when the whole of the vortex is displaced from the central axis of symmetry, as shown in Fig. 3. It thus forms a new precessional center of the vortex which precesses about the geometric

* Corresponding author.

Presented at the Twenty-Fifth Symposium (International) on Combustion, Irvine, California, 31 July–5 August 1994.

COMBUSTION AND FLAME 100: 407–412 (1995)
Copyright © 1995 by The Combustion Institute
Published by Elsevier Science Inc.

0010-2180/95/$9.50
SSDI 0010-2180(94)00167-Q

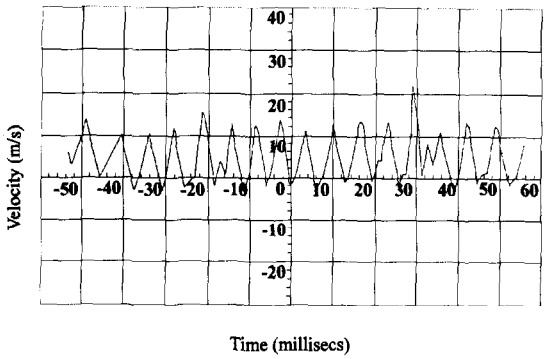

PVC trace obtained from a pressure transducer located at the exhaust of the swirl burner

Fig. 1. Typical PVC trace from a swirl burner fired on premixed natural gas and air.

centre of the burner and explains the time-dependent measurements of negative tangential velocities occurring due to inappropriate choice of coordinate system.

Due to considerations of angular momentum flux, it is clear that a substantial increase in tangential velocity occurs as the flow is squeezed between the precessional center of

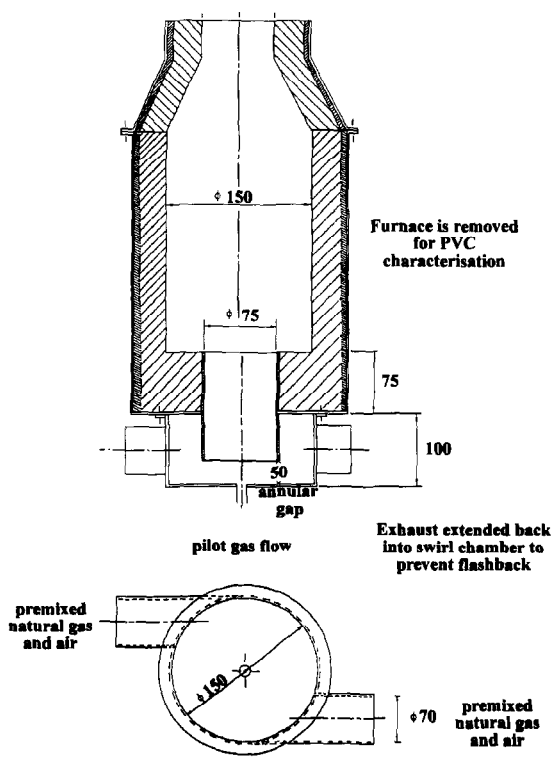

Fig. 2. The 100 kW swirl burner.

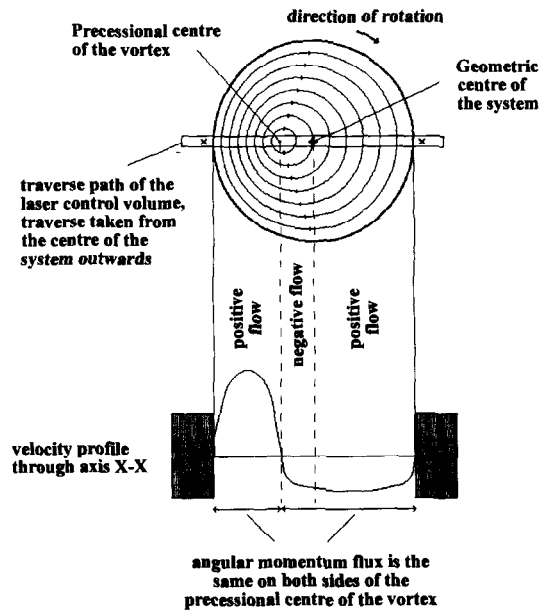

Fig. 3. Off-set vortex, showing the cause of negative flow encountered in QFV velocity profiles.

the vortex and the outer wall of the burner. An angular momentum flux balance along diameters taken through the precessional center of the vortex clearly confirms this. As a consequence the RFZ forms around the precessional centre of the vortex and is also displaced from the geometric center. The RFZ forms a crescent-shaped segment lagging behind the precessional center of the vortex by up to 180° Axisymmetry of the flow is achieved by X/D ≈ 1.

Under combustion conditions the amplitude of the PVC could be either:

(i) damped by an order of magnitude with several forms of diffusion controlled natural gas combustion; much of this process arises from the decreased swirl number due to the axial acceleration of the flow by the combustion process.

or

(ii) considerably excited by premixed or partially premixed combustion.

As most large swirl burners run at fairly low Swirl numbers ($S \approx 0.7$) and are nonpremixed the PVC has generally been ignored in the context of large power station boilers, although the authors feel that even in its highly damped

form it plays a significant part in the flame stabilisation process, through the formation of the RFZ. However, with solid fuel fired swirl burners, considerable ignition delay can occur and the PVC may well be present in the initial part of the flow, as well as in the isothermal state. With devices operating at swirl numbers around 1 or greater, and with fuels such as low calorific value gases, where partial or full premixing may be necessary, the PVC is often present [7]. Recently their stability with fuel-rich firing in a primary combustion stage giving low NO_x characteristics has further widened their attractiveness [8].

This paper presents some recent work directed at obtaining fundamental knowledge about the PVC structure under premixed combustion conditions and its importance in governing the structure of the RFZ, and hence its role in mixing and flame stabilisation.

APPARATUS

The swirl burner is of simple design and has evolved for burning dirty, low calorific value gases [7]. The air/gas mix is fed into the burner via two tangential inlets and has a geometric swirl number of 1.5 and is of similar design to the units reported in Refs. 9, 10, and 15 (Fig. 2). It forms part of a swirl burner/furnace system for efficiently burning low calorific value gases [7, 15]. The furnace is typically twice the burner exit diameter. For this study, and reasons of experimental access, the furnace was removed and the system run with premixed firing discharging into the atmosphere. The purpose of these trials was to simulate the combustion of premixed air/low calorific value gas mixtures (calorific value down to 1.4 MJ/m^3) in this system. Of the natural gas used 90% was premixed with all the combustion air and was used to simulate the combustion of low calorific value gases. The overall mixture ratio relative to stoichiometric was 1.64. To prevent flashback of the combustible mixture from the exhaust to the swirl chamber inlets the exhaust of the unit was extended backwards into the swirl chamber so that the flow had to pass radially through a 50-mm annular gap before entering the exhaust. The remaining 10% of the natural gas was fed through the axial fuel inlet to provide a pilot flame, as normally the furnace section had to be left in place for reasons of flame stability. Results were obtained for an air flowrate of 1120 l/min and natural gas of 82 l/min. This corresponds to a simulated low calorific value gas of approximately 2.7 MJ/m^3. A water-cooled Kistler pressure transducer (type 7261 frequency response 2.5 kHz) was mounted flush with the burner exhaust rim and gives a direct analogue PVC signal as shown in Fig. 1. This was used to trigger or mark a system for the associated color component DANTEC LDV system such that the 10,000 Doppler bursts captured at a measuring point could be related to the peak velocity of the PVC. This system has a frequency response of over 90 kHz provided sufficient particles are present in the flow. In terms of the structure and shape of the PVC signal the configuration of the swirl flow system seems to be of little significance apart from the level of swirl generated, or the system swirl number [4, 9, 10].

The analysis software is derived from engine analysis work using the timing pulse generated from the hot-wire probe or pressure transducer to trigger the LDV system. This enables not only the conventional time mean and fluctuating velocities (and shear stress) to be obtained, but also the periodic mean velocity profile as the PVC rotates about the central axis of symmetry. This is achieved by overlaying successive data points onto a scatter diagram (Fig. 4). In this diagram the PVC frequency was 100 Hz, i.e., 10 ms for each revolution. When an average curve is produced, Fig. 4, the curve can be digitized such that the angular variation of all 3 phase averaged mean velocities, as the PVC rotates, can be obtained. Values of fluctuating or rms velocities, as well as the mean could be obtained, but this was not done owing to worries about spatial resolution of the measuring volume (2 mm long $\times$ 0.4 mm diameter) and jitter on the PVC signal, which could cause uneven triggering of the system by the PVC. This can be clearly seen on Fig. 4 where some 5%–10% of points are not located in the main cluster of points around the mean curve. A range of data for mean radial, tangential and axial velocities at different measuring stations has been obtained, both in the conventional

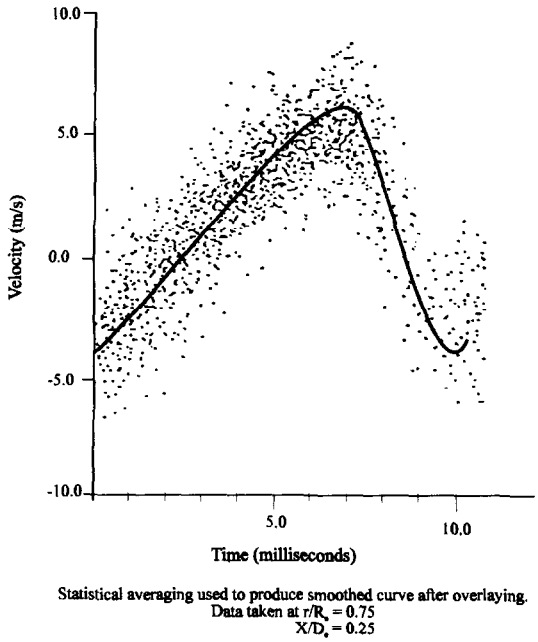

Fig. 4. Phase-averaging technique and overlaying of data.

time mean sense and in a rotating frame of reference or phase averaged sense, triggered by the PVC, for both the isothermal (not reported here) and piloted premixed combustion case.

Figures 5–8 thus represent a phase-averaged rotating flow field at particular sections downstream of the exhaust nozzle. Each diagram is typically assembled from some 100,000 individually measured points obtained over about 15,000 revolutions of the precessing vortex core. Accuracy of the velocity measurements is estimated to be $\pm 5\%$ for velocities > 4 m/s, $\pm 10\%$ for velocities < 4 m/s. The position of the flame front and mean temperature profiles were measured with a 50 μm micron diameter, platinum/platinum 13% rhodium, thermocouple coated with fired hexamethyldisiloxane to reduce catalytic effects. These measurements were subsequently corrected for heat loss to the surroundings.

RESULTS AND DISCUSSION

A series of results for phase averaged velocities in the tangential/radial plane is shown in Figs. 5–8 for three planes at $X/\mathrm{De} = 0.25$, 0.5, 1.0, both for tangential (a) and axial (b) velocities. Locations of the flame front, characterized by the mean 1000°C contour, are also shown on the diagrams. Close to the burner exit at $X/\mathrm{De} = 0.25$ the character of the vortex core precession can be clearly seen (Fig. 5a). It is characterized by a small central region of negative tangential velocity, extending to a nondimensionalized exit radius of $r/R_e \approx 0.17$, and occupies a sector of approximately 90°. A crescent moon-shaped sector of high tangential velocity develops close to the exhaust of the burner extending over nearly 180° with peak values of 15 m/s, 50% higher than that at the same radius but lagging by 180°. The corresponding axial velocity contours are shown in Fig. 5b. No evidence of reverse flow can be seen in the central region of flow, although some eccentricity is already developing. Again a crescent moon-shaped sector of high forward axial velocity has developed in the same region, as occurred with tangential velocity, with maximum velocities again up to 50% higher at 17.5 m/s than those at the same radius, but lagging by 180°. The squeezing effect of the off-centered precessing vortex is clear, as illustrated by Fig. 3.

The visualization of the tangential/radial velocities is shown by the vector plot of Fig. 6 and should be compared with Figs. 3 and 5a, b. The off-centered nature of the centre of the vortex is very clear, and reinforces the schematic diagram of Fig. 3. Combustion is initiated inside the burner, and at this section the flame front is virtually symmetrical. The 1000°C mean temperature contour is locatec at $r/R_e \approx 0.62$ in a region where the flow is virtually symmetric and of fairly low velocity (~ 7 m/s tangential, ~ 7 m/s axial). Furthei downstream at $X/\mathrm{De} \approx 0.5$ (Fig. 7), furthei development of the flow has occurred. The region of negative tangential velocity has expanded considerably in size, expanding to $r/R \approx 0.6$, clearly indicating how the center o vortex core precession has also moved radiall outwards (Fig. 7a). The crescent moon-shape sector of high velocity flow is still evident witl maximum velocities of 13.4 m/s. Some twistin of the outer precessing jet is evident from comparison of Figs. 5a and 7a, where the posi tion of peak tangential velocity has lagged b about 60°, moving from $X/\mathrm{De} \approx 0.25$ to 0.5. similar conclusion is reached by comparin

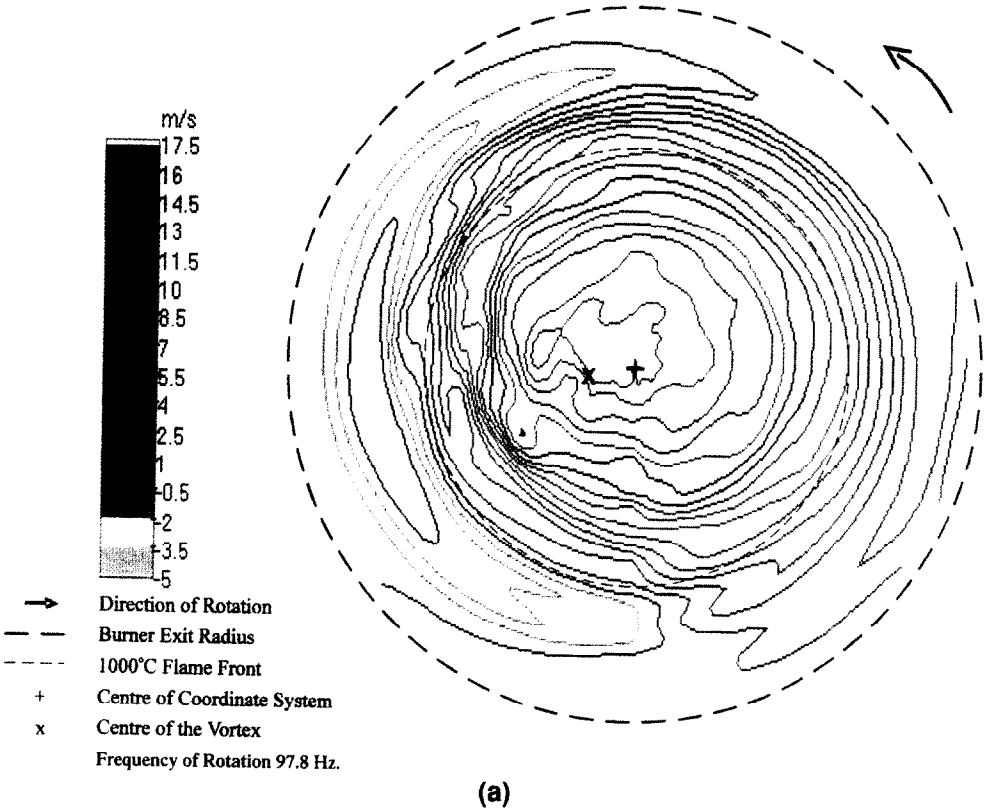

(a)

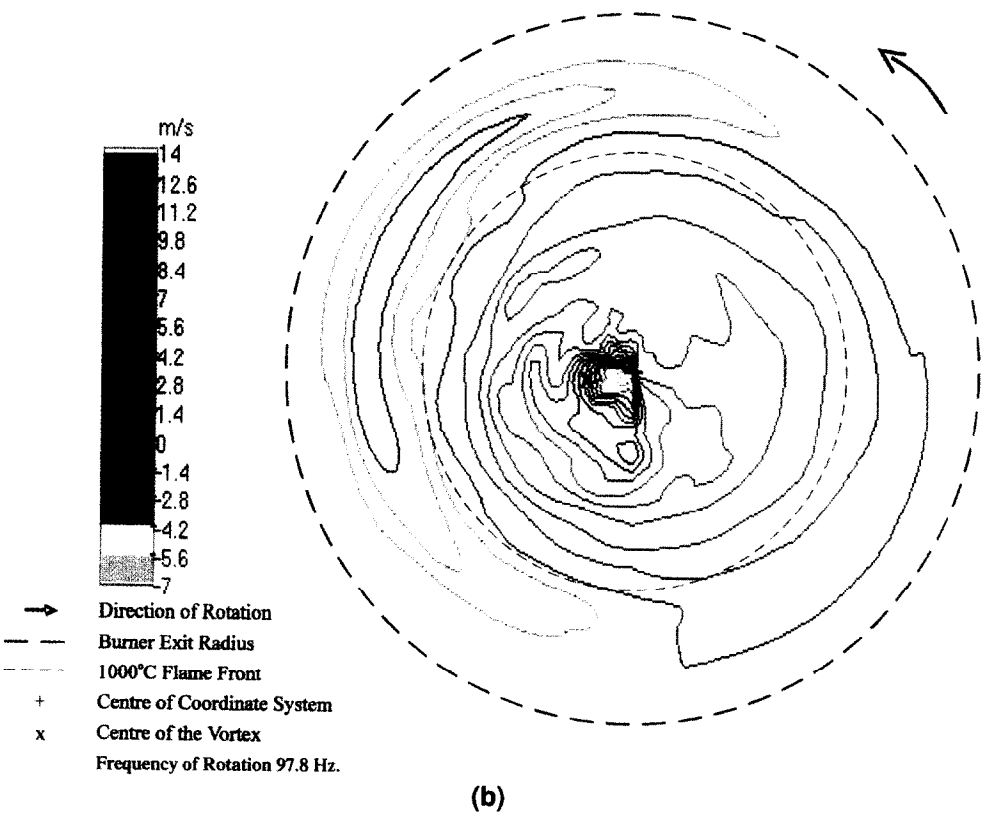

(b)

Fig. 5. (a) Phase-averaged mean rotating tangential velocity contours at $X/De=0.25$ above burner exit. (b) Phase-averaged mean rotating axial velocity contours at $X/De=0.25$ above burner exit.

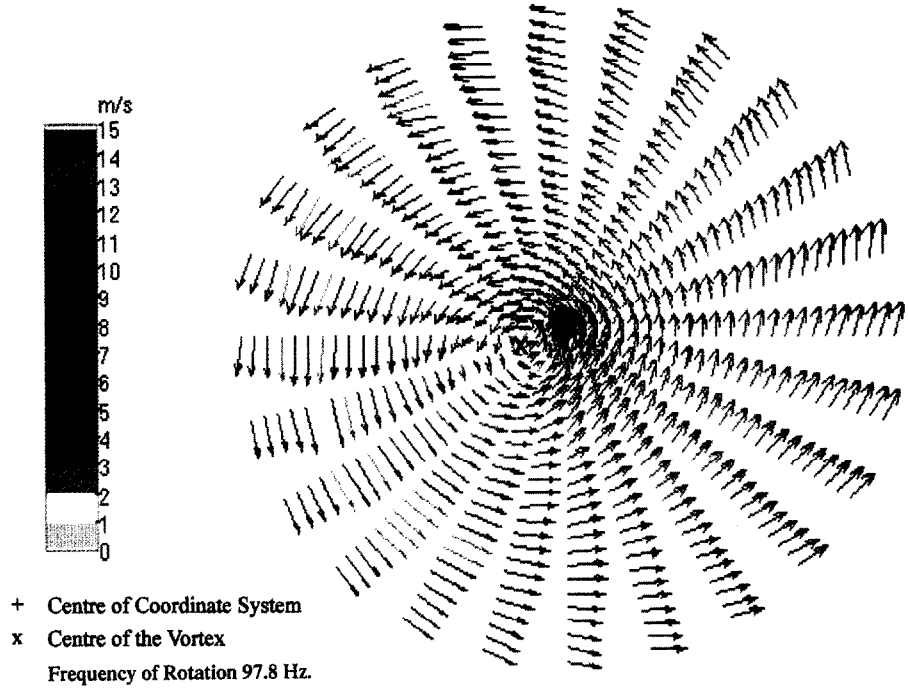

Fig. 6. Tangential/radial velocity vectors at *X*/De=0.25.

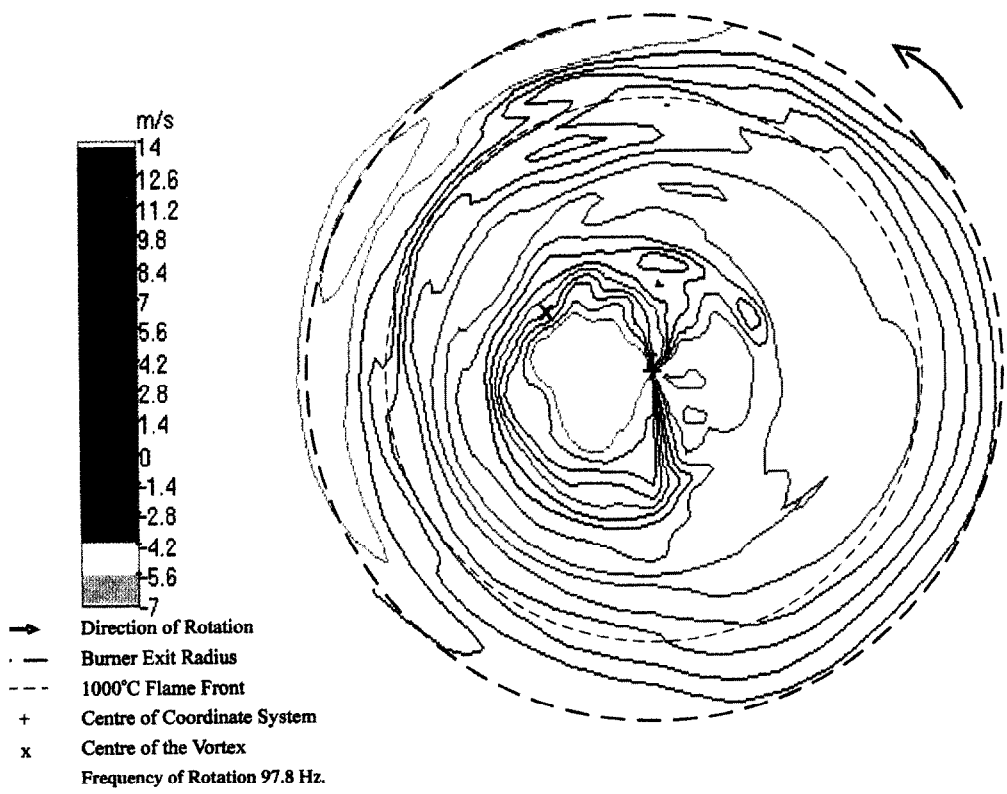

Fig. 7. (a) Phase-averaged mean rotating tangential velocity contours at *X*/De=0.5 above burner exit.

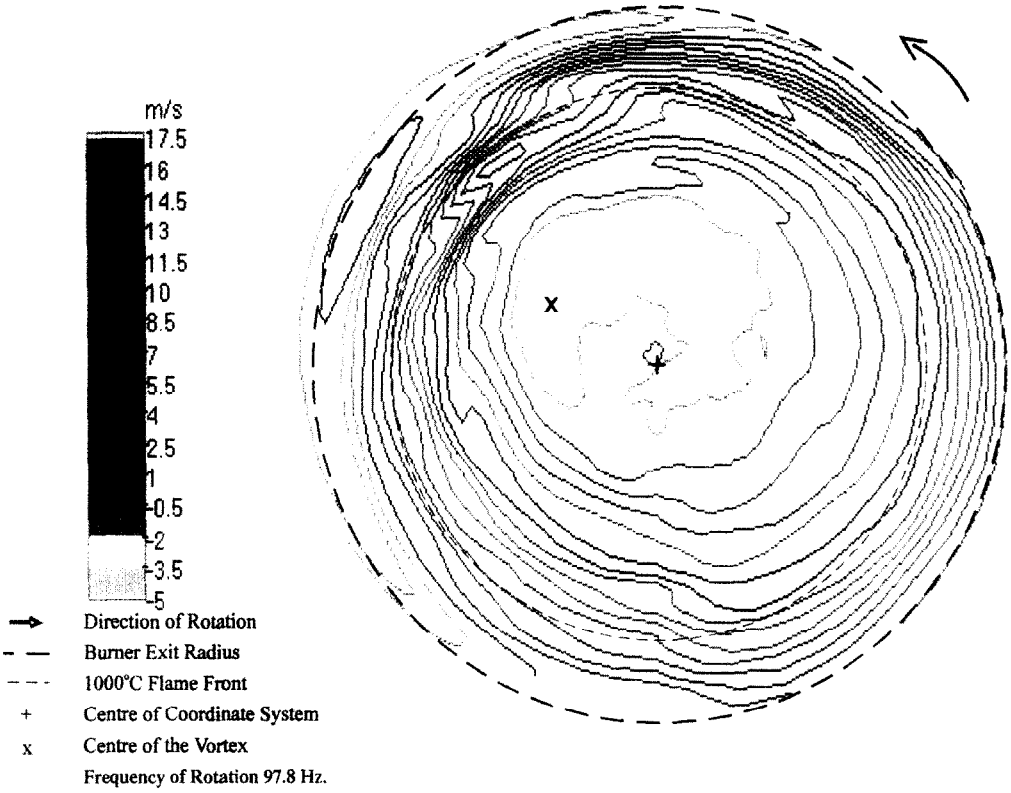

Fig. 7. (b) Phase-averaged mean rotating axial velocity contours at $X/De=0.5$ above burner exit.

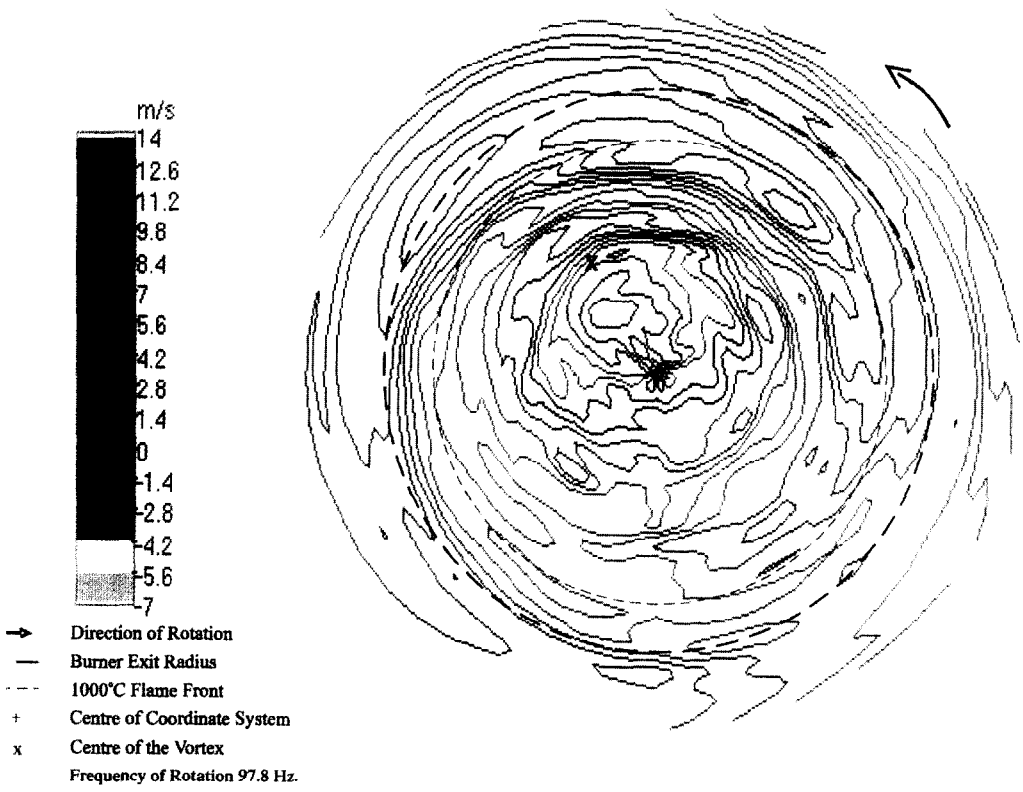

Fig. 8. (a) Phase-averaged mean rotating tangential velocity contours at $X/De=1.0$ above burner exit.

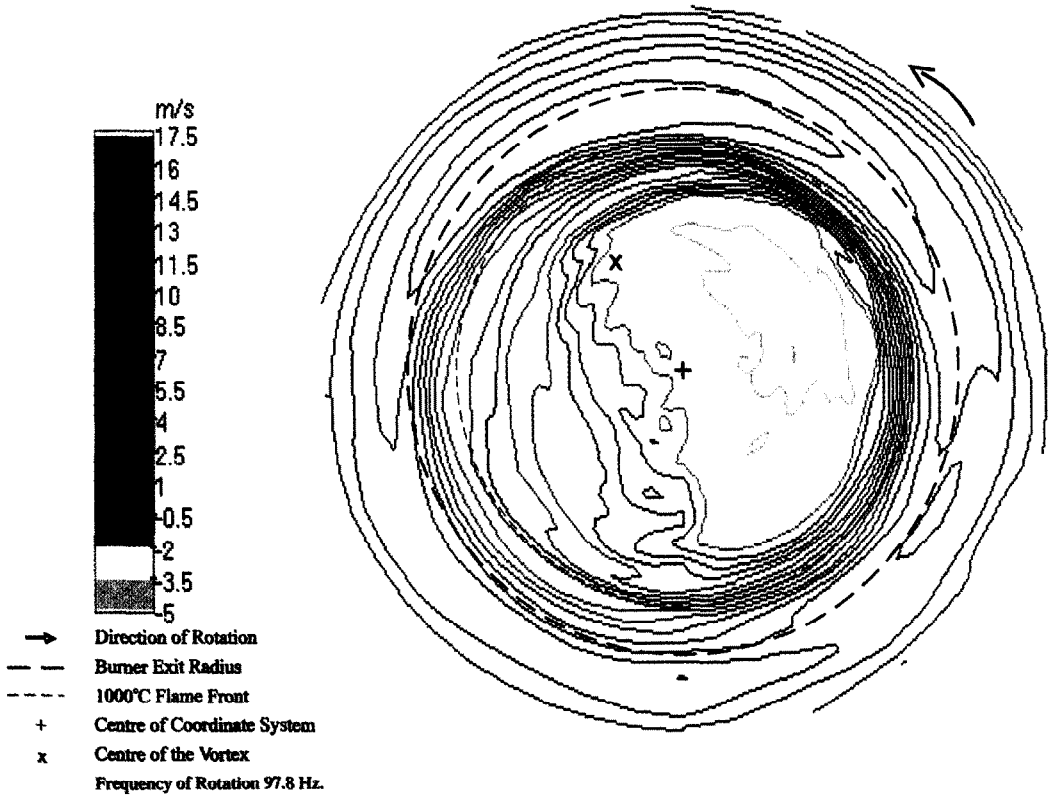

Fig. 8. (b) Phase-averaged mean rotating axial velocity contours at $X/De=1.0$ above burner exit.

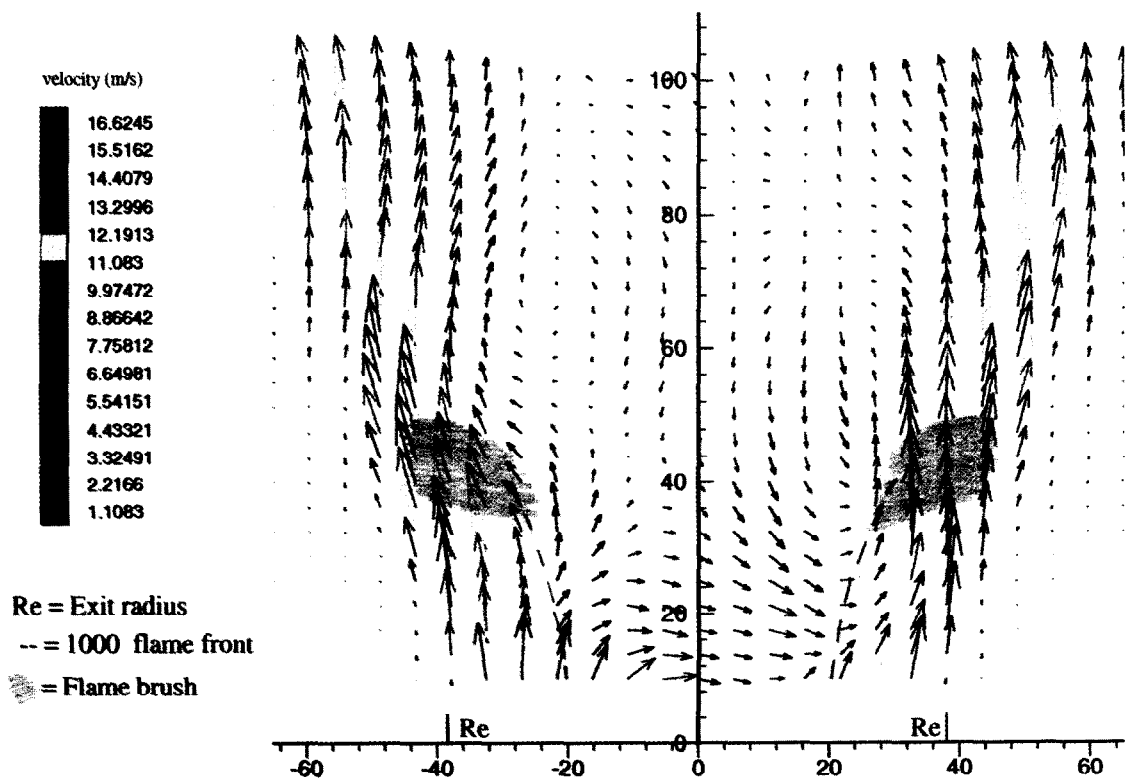

Fig. 9. Axial/radial plot for the 0-180° cross section.

Figs. 5b and 7b. The axial velocity contours, Fig. 7b, follow earlier trends except that a large eccentric central RFZ has now developed and covers all the area of negative tangential velocity shown in Fig. 7a. The area of highest axial velocity, again at 17.5 m/s, is located at the same position as the tangential velocity maximum. The flame front at 1000°C is located again in a region of virtually symmetric flow at $r/R_e \approx 0.77$. Velocities are similar to the $X/\mathrm{De} = 0.25$ case. Consideration of Figs. 5 and 7 shows that the flow is roughly divided into two regions of three dimensionality and time dependence, separated by a region of near axisymmetry where the flame front is located. The central region inside the flame front encompasses the off-center RFZ and the precessional centre of the vortex. The other annular region outside of the flame front contains the precessing jet which effectively rotates around the flame front.

When such a furnace as those described in Refs. 7 and 15, is attached to the burner, this region hits the wall at about $X/\mathrm{De} \approx 1$ and forms an outer recirculation zone where reactants in the outer precessing jet are combusted. The central region of combustion reported here thus acts as a pilot flame for combustion of low calorific value gases in the furnace (when attached).

Further downstream at $X/\mathrm{De} = 1$ (Fig. 8), further development of the vortex core precession occurs. A region of negative tangential velocity, but somewhat reduced in size, is still evident (Fig. 8a) while the crescent moon-shaped region of high tangential velocity can still be seen. Relative to $X/\mathrm{De} = 0.25$ the region of highest tangential velocity has translated in the θ-direction by about 90°. The axial velocity contours (Fig. 8b) are more regular and show that the central RFZ has increased in size further and become more eccentric with respect to the central axis. Again, the regions of negative tangential velocity and axial reverse flow overlap, although the RFZ also lags behind the negative tangential velocity region by up to 180° (Fig. 8). The outer high velocity precessing jet flow is still evident (Fig. 8b), again correlating well with the region of maximum tangential velocity. The flame front effectively ends at this section, again in a region of virtually symmetric flow, between the two three-dimensional time dependent sections of the flow (Fig. 8) at a radius $r/R_e \approx 0.8$. In the unconfined environment in which this burner was tested, further measurements showed that the RFZ extends to $X/\mathrm{De} \approx 2.5$, and thus in the unconfined flame reported here cool products are recycled to the flame root, quenching the reaction.

In practice it is known that the addition of a furnace to the system reduces the size of the central RFZ and, in consequence, a swirl burner of quite high swirl number, as used in the present work, is needed, to compensate for the effects of confinement (7, 15). For more open systems, as for instance in power station boilers, lower levels of swirl can be used.

In terms of mixing processes and flame stabilization, it is clear that the precessing vortex core phenomena generates an off-centered, or eccentric, RFZ which rotates through a region of low velocity, and in a swirl burner/furnace recycles hot active combustion products which are swept through a region of forward flowing, partially reacted products. The processes occurring here are illustrated by Fig. 9, which shows a composite picture of correlated time-dependent measurements taken in a vertical slice in the axial radial plane across the burner. It represents a series of instantaneous axial/radial velocity vectors taken over an average PVC cycle. The precessing jet leaving the burner can be seen clearly in Fig. 9 as a high-velocity region of annular conical form. There is evidence of high velocity periodic structures in this jet flow region. The most interesting region is in the central region of flow inside the flame front. Clearly the mixing processes occur via a series of axial/radial eddies which are of periodic nature which pass down into the central region of flow. The reverse and forward flow regions in this region tend to consist of large discrete packages of fluid distributed in a low-velocity region, thus explaining the high levels of directional intermittency measured in these regions [9, 10, 14].

CONCLUSIONS

This paper describes a phase averaging technique on three-dimensional velocity measure-

ments made in the exhaust of a swirl burner triggered by the pressure signal generated by the Precessing Vortex Core (PVC), used to visualize the complex three-dimensional time-dependent flow and mixing patterns generated in a piloted premixed natural gas fired flame.

The PVC phenomenon is clearly shown to be caused by the displacement of the center of the vortex. This displacement, in turn, causes squeezing of flow against the exhaust of the burner and due to angular momentum flux considerations causes considerable increase of tangential velocity level. The central RFZ is similarly displaced from the axis of symmetry and rotates through a region of forward flow. The flame front is established at a region of near symmetrical flow between the outer precessing jet and the inner eccentric RFZ. Averaged data taken over many vertical slices enables visualization of processes occurring in vertical axial/radial slices taken on many sections over a phase-averaged PVC cycle. This clearly shows the periodicity and intermittency of the mixing processes in the central region of flow inside the flame front. The phase averaged velocity characterization technique has thus proved its worth in visualizing the complex three-dimensional time-dependent flow structures found in such complex flows.

The authors gratefully acknowledge the financial provision of the two component LDV system by the Science and Engineering Research Council, the upgrading of this system to 3 component configurations by HEFCW. Danny Froud is financed as a research assistant by SERC.

REFERENCES

1. Sato, K., O'Doherty, T., Biffin, M., and Syred, N., *Proceedings of the International Symposium on Combustion and Emission Control*, Cardiff, UK, pp. 243–256, 1993.
2. Gupta, A. K., Lilley, D. J., and Syred, N., *Swirl Flows*, Abacus, Tunbridge Wells, 1984.
3. Syred, N., Gupta, A. K., and Beer, J. M., *Proceedings of the Fifteenth Symposium (International) on Combustion*, The Combustion Institute, Pittsburgh, PA, 1975, pp. 587–597.
4. Syred, N., and Beer, J. M., *Combust. Flame* 23:143–201 (1974).
5. O'Doherty, T., Froud, D., Bates, C. J., and Syred, N., *J. I. Mech. Eng.*, Part A3, December 1993.
6. Spruyt, A. G., *Proceedings Nederlands Akoestich Genootschap*, Utrecht, 1972, pp. 9–20.
7. Claypole, T. C., and Syred, N., Report No EUR 10088EN, published by the Commission of the European Communities, Luxembourg, 1985.
8. Wall, T. F., *Principles of Combustion Engineering for Boilers* (C. J. Lawn, Ed.), Academic, London, 1987, pp. 177–336.
9. Claypole, T. C., and Syred, N., *Proceedings Vortex Flows Symposium* held at the Winter Annual Meeting of ASME, Chicago, 1980, pp. 47–56, Library of Congress Catalogue Card 80-69187.
10. Claypole, T. C., Ph.D. thesis, University of Wales, Cardiff, 1980.
11. Yazdabadi, P., and Griffiths, A. J., *Exp. Fluids*, in press.
12. Najim, S., Ph.D. thesis, University of Wales, Cardiff, 1979.
13. Cassidy, J. J., and Falvey, H. T., *J. Fluid Mech.* 21:111 (1965).
14. Claypole, T. C., and Syred, N., *Riv. Combust.* 34(7–8):150–165 (July 1980).
15. Syred, N., Kahmen, K. R., Styles, A. C., and Najim, S. A., *Inst. Fuel* 50:195 (1977).

Received 6 December 1993; revised 30 June 1994