POKHARA UNIVERSITY

Level: Bachelor
Programme: BE
Course: Applied Mechanics I

Semester: Fall

Year : 2017
Full Marks: 100
Pass Marks: 45
Time : 3hrs.

Candidates are required to give their answers in their own words as far as practicable.

The figures in the margin indicate full marks.

Attempt all the questions.

1. a) Knowing that tension in cable AC is 475 N, determine the resultant of the three force exerted at point A of the beam AB. Figure given is on 2D plane.

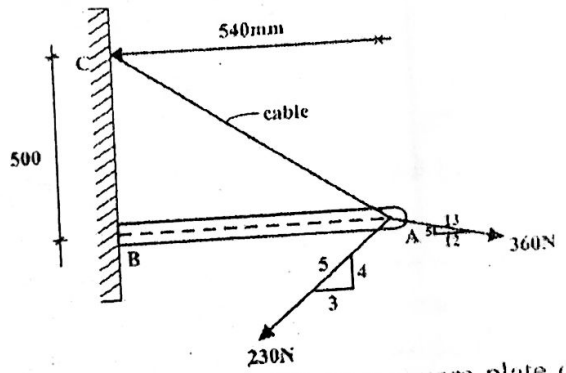

b) A force and a couple act (figure 1b) on a square plate of side 20 cm. Replace the given force and couple with a single force applied at a point located on line *AB*. Also determine the distance from *A* to the point of application of the force.

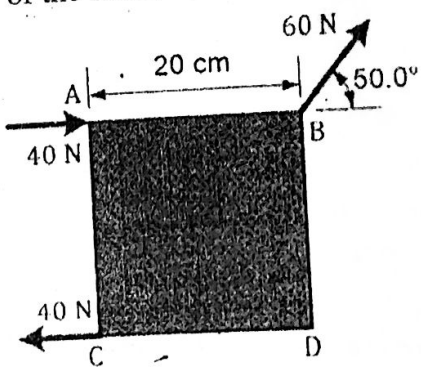

2. a) Locate the centroid of the shaded area as shown in figure below. 7

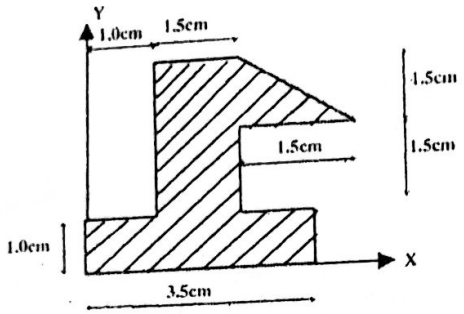

b) Determine the moment of Inertia about x and y areas for the given area bounded by the curve and straight line by direct integration method. 8

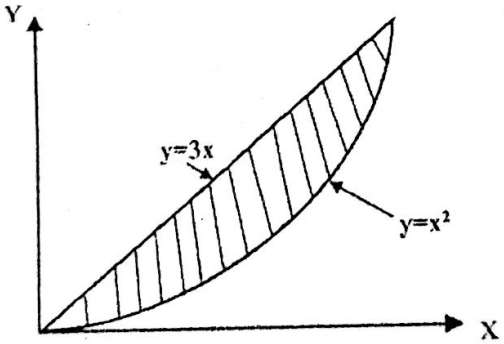

3. a) Two Spheres A and B are placed in container as shown in figure. Determine the reaction from the walls of the container. 8

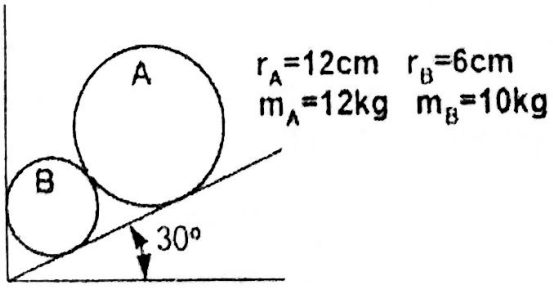

b) The 700 N force is applied is applied to the 100 kg block, which is stationary before the force is applied. Check whether the block will remain in equilibrium after the force is applied. Also determine the magnitude and direction of friction force. The static and kinematic coefficient of friction between the surfaces is 0.8 and 0.6 respectively. 7

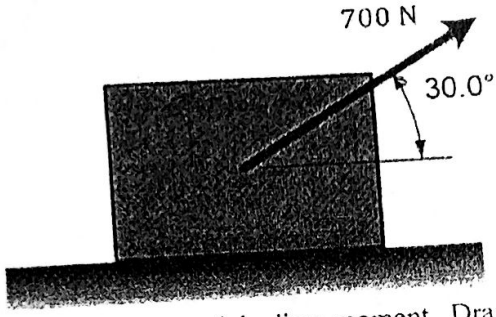

4. Define axial force, shear force and beding moment. Draw Shear Force diagram and Bending moment diagram for a given beam. Also show point of contraflexure if any. 15

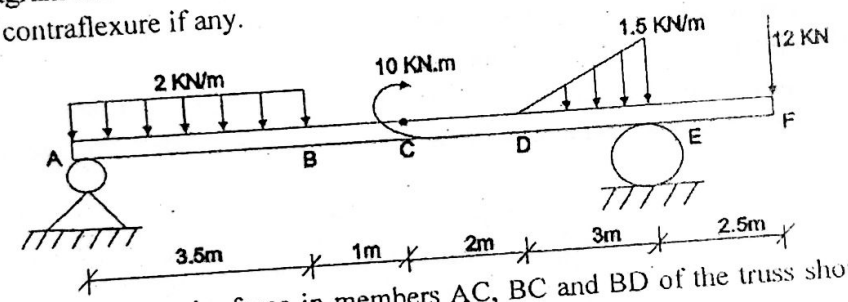

5. a) Determine the force in members AC, BC and BD of the truss shown below by using method of section. 9

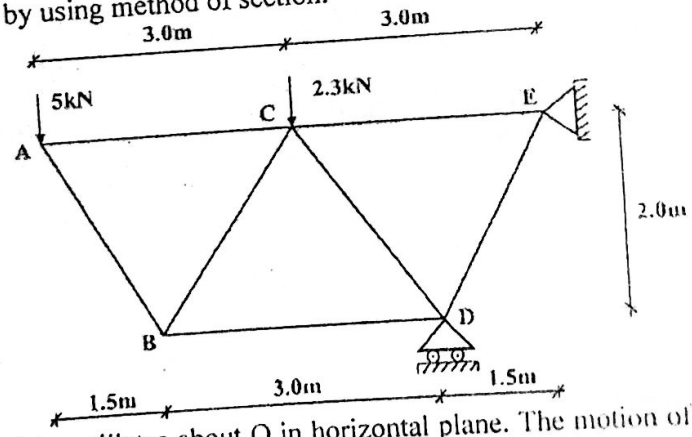

b) Rod OA oscillates about O in horizontal plane. The motion of 120gm collar B is defined by relation $r = \frac{8}{t+2}$ and $= \frac{4}{\pi} \sin \pi t$, where 'r' is expressed in meters, 't' in seconds and 'θ' in radians. Determine the radial and transverse components of force exerted on collar when t=3sec. 6

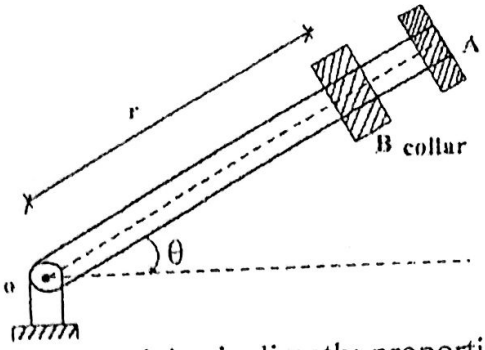

6. a) The acceleration of the particles is directly proportional to the time t. At time t=0 sec, the velocity of the particle v=-16m/s. Knowing that both the velocity and position coordinate are zero. When t=4 sec. Write the equation of the motion of the particles. 8

b) Pin A, which is attached to link AB, is constrained to move in the corcular slot CD. Knowing that at t=0 the pin starts from rest and moves so that its speed increases at a constant rate of $2cm/s^2$, determine the magnitude of its total acceleration when t=0 sec and t=2sec. 7

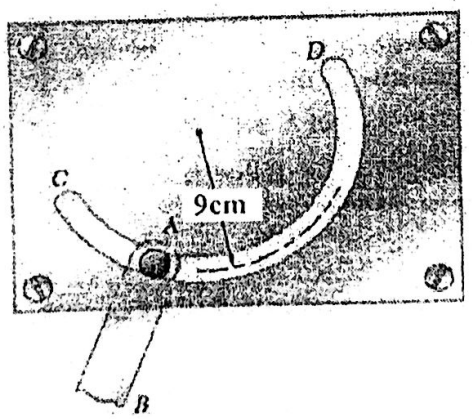

7. Write short notes on: **(Any two)** 2×5

a) Definition and scope of Applied Mechanics

b) Co-ordinate system and their relationship

c) Conservation of Linear and Angular Momentum

d) Tangential and Normal component in kinematics and kinetics

POKHARA UNIVERSITY

Level: Bachelor
Programme: BE
Course: Applied Mechanics I

Semester: Spring

Year : 2017
Full Marks: 100
Pass Marks: 45
Time : 3hrs.

Candidates are required to give their answers in their own words as far as practicable.

The figures in the margin indicate full marks.

Attempt all the questions.

1. a) Three forces $\mathbf{F_1}$, $\mathbf{F_2}$, and $\mathbf{F_3}$, all of which act on point A of the bracket, are specified as shown in figure below. Determine the magnitude and direction of resultant of these forces. 7

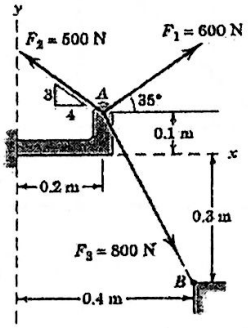

b) A square foundation mat supports the four columns with the weight as shown. Determine the magnitude and point of application of the resultant of the four loads. 8

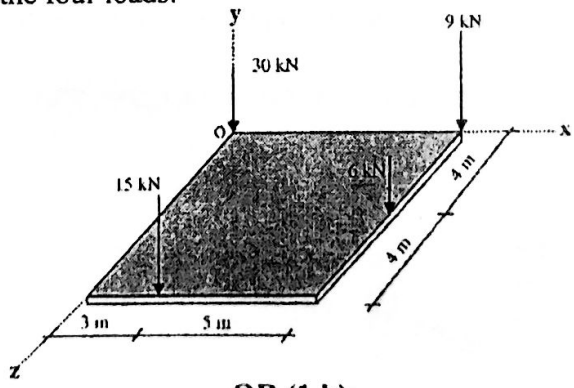

OR (1 b)

A force **F** acts at point A as shown in the figure. Determine the moment of the force **F** about point C and axis CE. 8

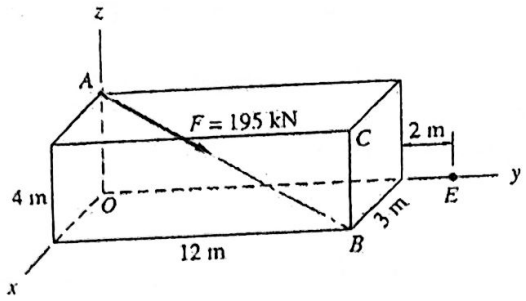

2. a) Determine the force in each member of the truss as shown in the figure. 8

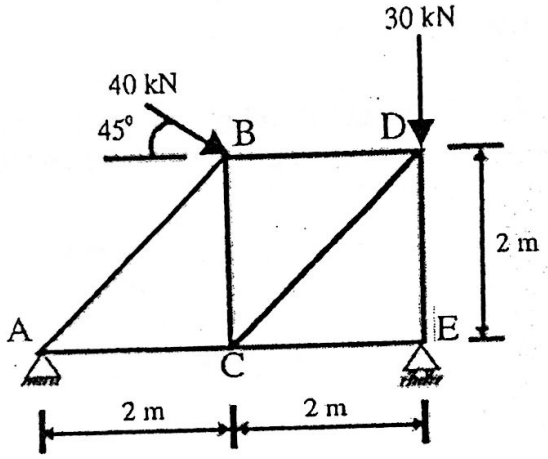

b) The coefficients of static and kinetic friction between the 100-kg block and the inclined plane are 0.30 and 0.20, respectively. Determine: 7

i. the friction force acting on the block when P is applied with a magnitude of 200 N to the block at rest

ii. the force P required to initiate motion up the incline from rest

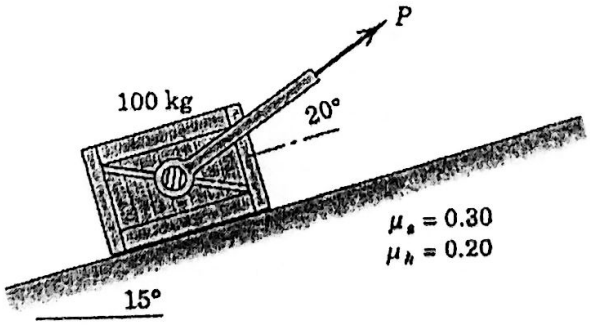

3. a) Determine the centroid of the composite area shown in the figure. 7

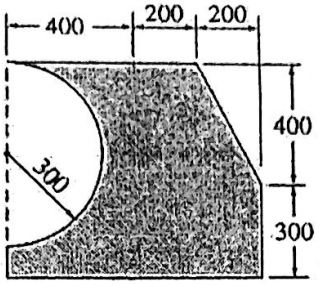

Dimensions in mm

b) Determine the moment of inertia of the area bounded by the curves about x and y axis by direct integration method. 8

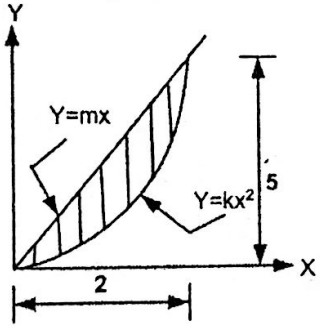

4. Draw the Shear force diagram and bending moment diagram for the beam shown below. Also show the point of zero shear and point of contra-flexure, if any. 15

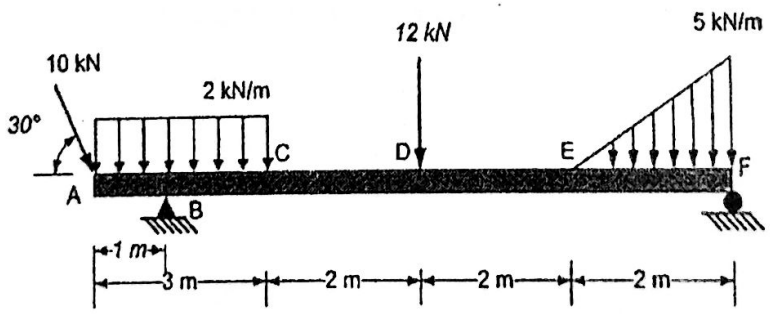

5. a) The relationship between velocity of particle and time is expressed as $v = -3t^2 - 18t$. How far the particle would travel between t= 4 sec and t= 10 sec and what will be the acceleration at these two times? 7.5

b) The rotation of the 1.20 m arm *OA* about *O* is defined by the relation $\theta = 0.18t^2$, where θ is expressed in radians and *t* in seconds. Collar *B* slides along the arm in such a way that its distance from *O* is $r = 1.20 - 0.15t^2$, where *r* is expressed in meters and *t* in seconds. After the arm *OA* has rotated through 30°, determine: 7.5

i. the total velocity of the collar

ii. the total acceleration of the collar

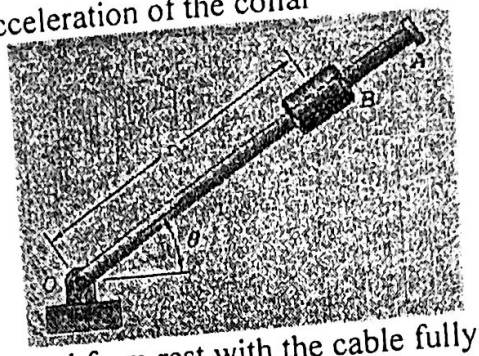

6. a) The system is released from rest with the cable fully stretched. For the friction coefficients $\mu_s = 0.25$ and $\mu_k = 0.25$, calculate the acceleration of each body and the tension T in the cable. Neglect the small mass and friction of the pulleys. 9

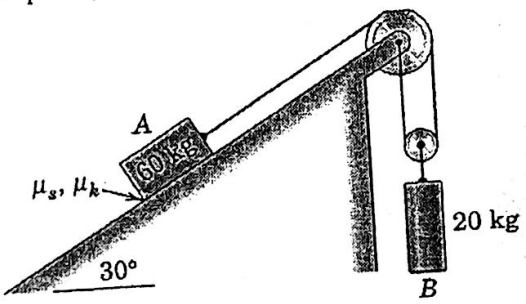

b) The bob of 2.5 m pendulum describes an arc of circle in a vertical plane. If the tension in the cord is 3.4 times the weight of bob for the position shown, find the velocity and the acceleration of the bob in that position by using tangential normal components. 6

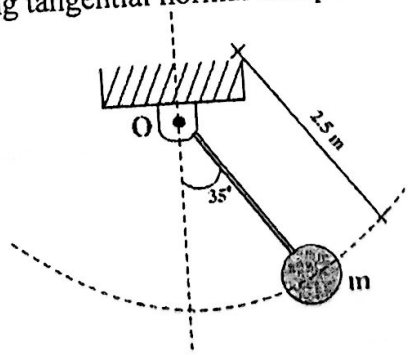

7. Write short notes on: **(Any two)** 2×5

a) Scope of Applied Mechanics

b) Coordinate system and its types

c) Physical meaning of static equilibrium

d) Conservation of linear and angular momentum

POKHARA UNIVERSITY

Level: Bachelor | Semester: Fall | Year : 2018
Programme: BE | Full Marks: 100
Course: Applied Mechanics I | Pass Marks: 45
Time : 3hrs.

Candidates are required to give their answers in their own words as far as practicable.

The figures in the margin indicate full marks.

Attempt all the questions.

1. a) Knowing that α = 35°, determine the resultant of the three forces shown. 7

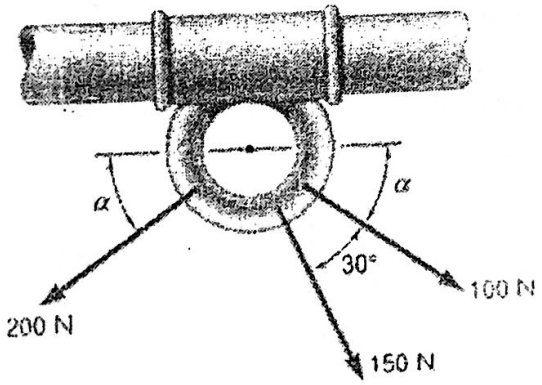

b) Determine the resultant of the four forces acting on a body as shown. 8

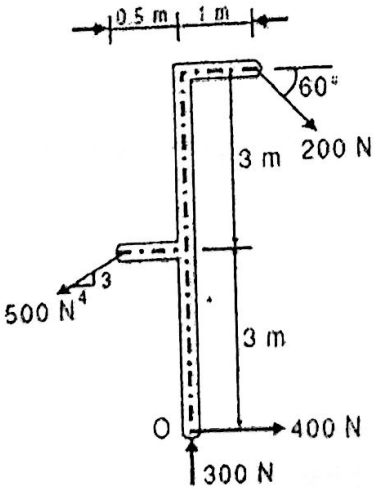

2. a) Determine whether the block shown is in equilibrium and find the magnitude and direction of the friction force when $\theta = 25°$ and $P = 750$ N. 7

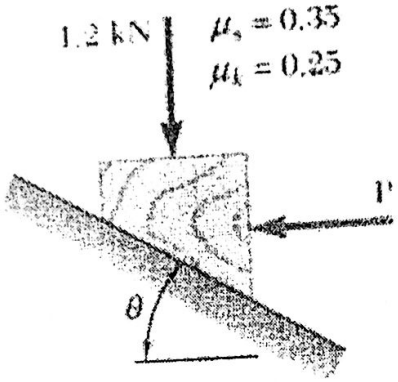

b) The two blocks shown start from rest. The horizontal plane and the pulley are frictionless, and the pulley is assumed to be of negligible mass. Determine the acceleration of each block and the tension in each cord. 8

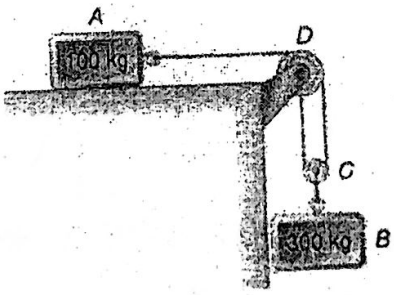

3. a) Locate the centroid of given shaded area by direct integration method. 7

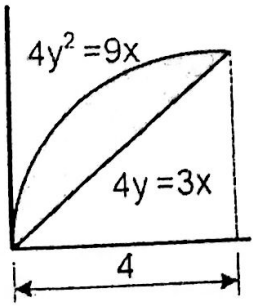

b) Determine the moment of inertia of the following built-up section about centroidal axes. 8

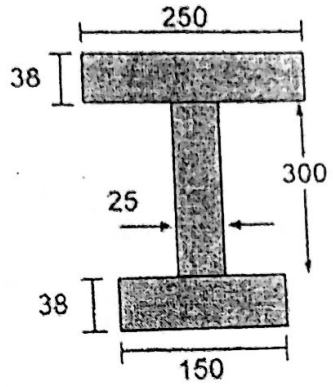

4. a) Determine the force in member CE, DE and DF of given truss by method of section. 9

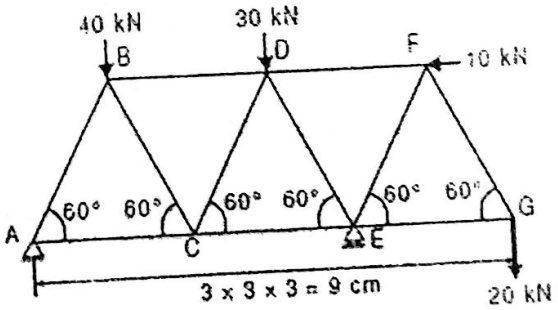

b) Define linear and angular momentum and derive the expression of conservation of linear momentum. 6

5. a) Plot the shear and bending moment diagrams for the beam loaded with both the distributed and point loads. What are the values of the shear and moment at $x = 6$ m? 11

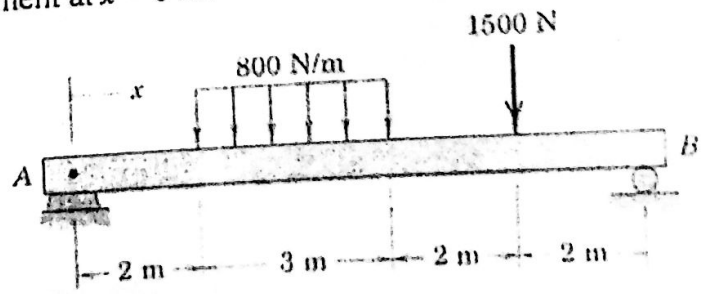

b) Write down the steps to draw free body diagram 'FBD'. 4

Am-I

6. a) A particle moves along a curved path defined by $r = 4\,\Theta^2$ and $\Theta = t^2/2$ where r in meters and t in seconds. Determine the velocity and acceleration of the particle when $\Theta = 60°$. 7

b) The vertical motion of mass A is defined by the relation $x = 10 \sin 2t + 15 \cos 2t + 100$, where x and t are expressed in mm and seconds, respectively. Determine (a) the position, velocity and acceleration of A when $t = 1$ s, (b) the maximum velocity of A. 8

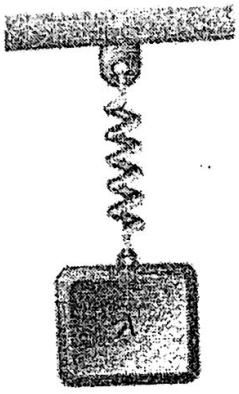

7. Write short notes on: **(Any two)** 2×5

a) Principle of Newtonian mechanics

b) Coordinate system

c) Resolution of a force into force couple system

POKHARA UNIVERSITY

Level: Bachelor
Programme: BE
Course: Applied Mechanics I

Semester: Spring

Year : 2018
Full Marks: 100
Pass Marks: 45
Time : 3hrs.

Candidates are required to give their answers in their own words as far as practicable.

The figures in the margin indicate full marks.

Attempt all the questions.

1. a) Discuss about concept of rigid, deformed and fluid bodies.

   b) The 190 N horizontal force **P** acts on a bell crank as shown. Find the two equal vertical forces at C and D which are equivalent to the couple found at point B.

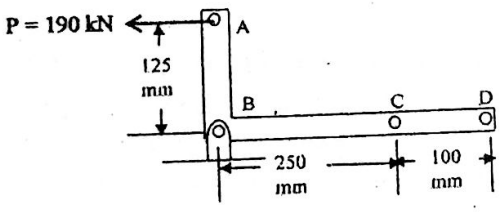

2. a) Determine the reaction on the sphere if the bottom channel is 360mm wide with one side vertical.

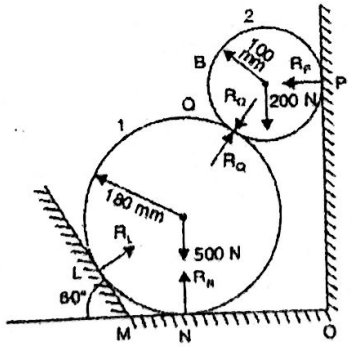

   b) What are the types of coordinate system? Illustrate with neat figure.

3. a) Knowing that $\theta = 50°$ determine the largest force P for which equilibrium of the 7.5 kg block is maintained. Take $\mu_s = 0.40$.

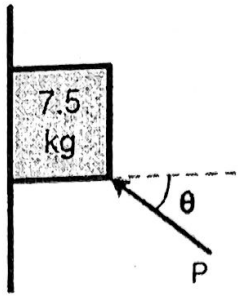

b) Draw the shear force diagram and Bending moment diagram of the given beam. 9

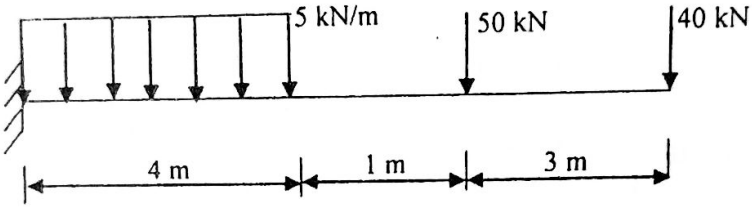

4. a) Calculate the centroidal moment of inertia of a triangle. 7

b) Find the member forces of the given truss. 8

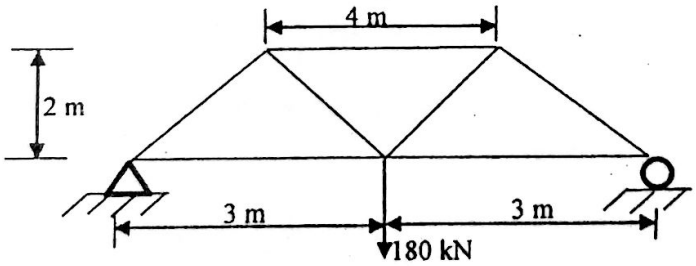

5. a) The acceleration of a particle is defined by the relation $a = 25 - 3x^2$, where a is expressed in mm/sec^2 and x in mm. The particle starts with no initial velocity at the position $x = 0$. Determine 7

i. the velocity when $x = 2$ mm
ii. the position where the velocity is again zero
iii. the position where the velocity is maximum.

b) A concrete foundation mat of 5 m radius supports four equally spaced columns, each of which is loaded 4 m from the centre of the mat. Determine the magnitude and the point of application of the resultant of the four loads. 8

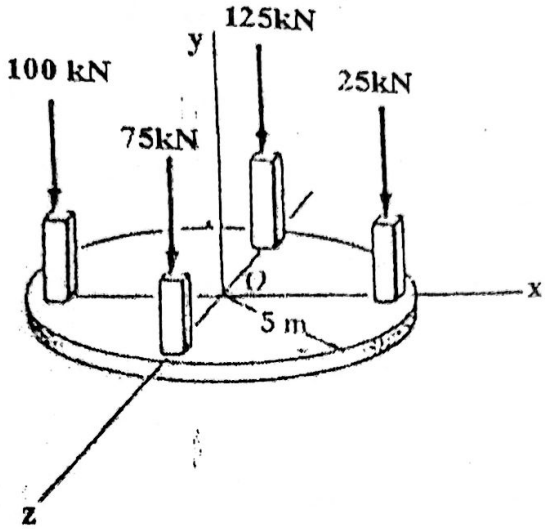

6. a) A projectile is aimed at a marked on the horizontal plane through a point of projection and falls 10 m short when the angle of projection is 15° while overshoots the mark by 25m when the inclination is 40°. Calculate the distance of target and required angle of projection. Neglect air resistance.

b) Three blocks A (m_A = 10 kg), B (m_B = 15 kg) and C (m_C = 25 kg) are connected by rope and pulley arrangement as shown in the figure. Determine the acceleration of each block and tension in the cable. The coefficient of kinematic friction between the contact plane and the block A and B is 0.3.

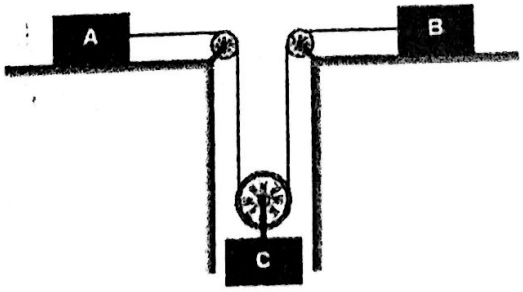

7. Write short notes on: **(Any two)**

a) Resolution and composition of forces.

b) Static and dynamic coefficient of friction

c) Conservation of linear and angular momentum

d) Impulse momentum principle for a particle

POKHARA UNIVERSITY

Level: Bachelor
Programme: BE
Course: Applied Mechanics I

Semester: Fall

Year : 2019
Full Marks: 100
Pass Marks: 45
Time : 3hrs.

Candidates are required to give their answers in their own words as far as practicable.

The figures in the margin indicate full marks.

Attempt all the questions.

1. a) What is Applied Mechanics? Write its importance and applications with real life examples. 7

   b) Determine the magnitude and direction of resultant force in the following diagram. Where F=2500N and P = 2760N. 8

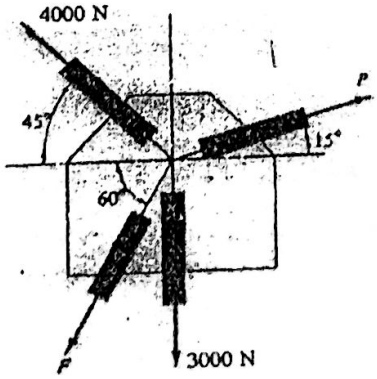

2. a) Two spheres I and II of radii 100 mm and 50 mm respectively are placed on a container as shown in the figure. Sphere I of mass 50 kg is suspended with a string AB of length 200 mm and sphere II of mass 25 kg is placed on top of it. Determine the tension is AB and the reaction from the container. 8

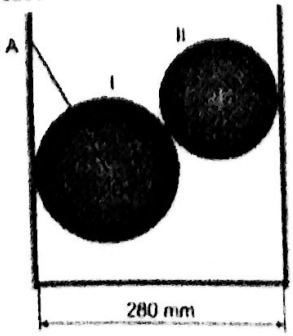

b) Knowing that $\theta = 40°$ determine the smallest force P for which equilibrium of the 7.5 kg block is maintained. Take $\mu_s = 0.45$ and $\mu_k = 0.35$. 7

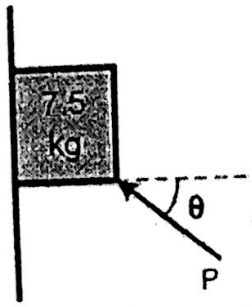

3. a) Locate the centroid of the shaded area figure with respect to the coordinate axes. 8

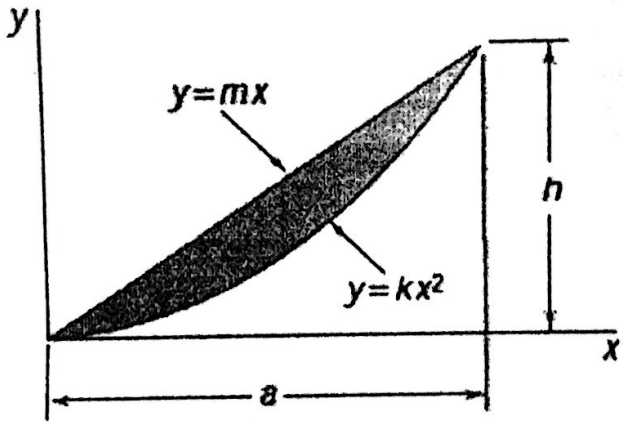

b) Calculate the centroidal moment of inertia of the shaded composite area as shown in figure. 7

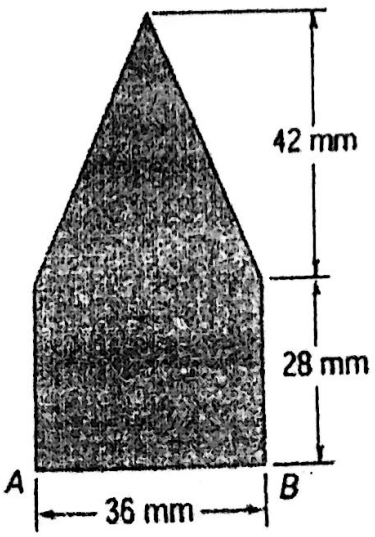

4. Define axial force, shear force and bending moment. Draw shear force and bending moment diagram of given beam. 3+12

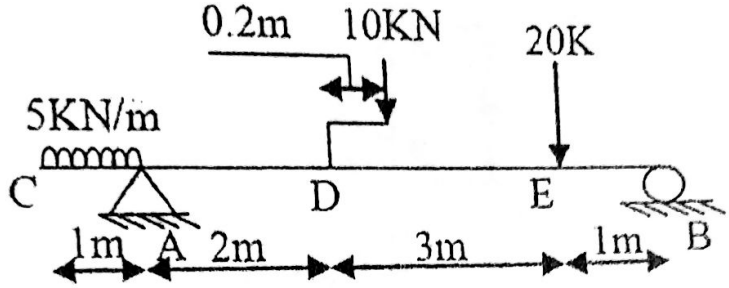

5. a) Define statically determinate and indeterminate truss. Analyze the force in members BC, BF and EF of the following truss. State with graphics; if the members are in tension or compression. 2+6

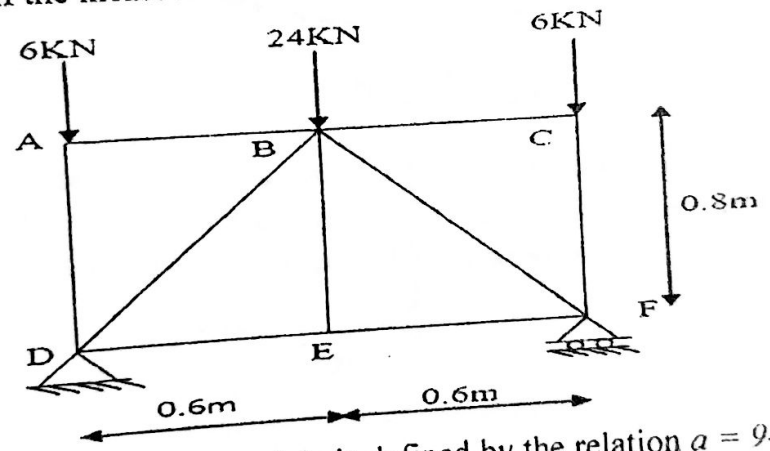

b) The acceleration of the particle is defined by the relation $a = 9-3t^2$. The particle starts at $t=0$ with $v=0$ and $x=15$m. Determine 7

i. The time when velocity is again zero
ii. The position and velocity when t=4s
iii. The total distance traveled by the particle from $t=0$ to $t=4$s

6. a) A single wire ACB passes through a ring at C that is attached to a 5 kg sphere which revolves at constant speed v in the horizontal circle as shown. Knowing that $\theta 1 = 50°$ and d= 0.8m and that the tension in both portions of the wire is 34N, determine a) The angle θ_2 b) The speed of ball. 8

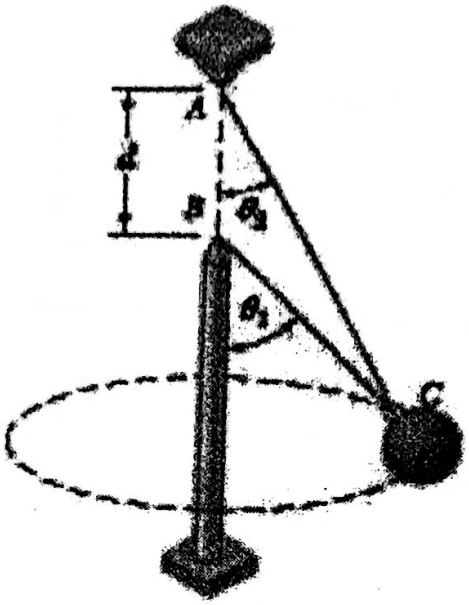

b) The bob of 3m pendulum describes an arc of circle in a vertical plane. If the tension in the cord is 2 times the weight of bob for the position shown, find the velocity and acceleration of the bob in that position. 7

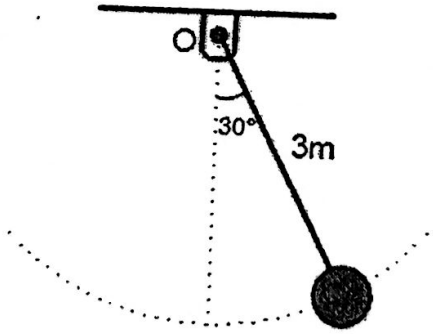

6. Write short notes on: **(Any two)** 2×5

a) Coordinate system and its types

b) Characteristics of couple

c) Radial and transverse components of velocity and acceleration

d) Conservation of Linear and Angular Momentum

POKHARA UNIVERSITY

Level: Bachelor
Programme: BE
Course: Applied Mechanics I

Semester: Spring

Year : 2019
Full Marks: 100
Pass Marks: 45
Time : 3hrs.

Candidates are required to give their answers in their own words as far as practicable.

The figures in the margin indicate full marks.

Attempt all the questions.

1. a) Knowing that the tension in rope AC is 365 N, determine the resultant of the three forces exerted at point C of post BC. 7

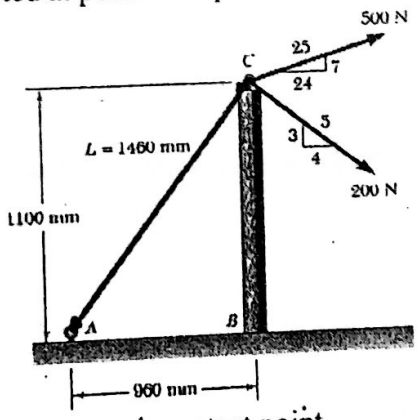

b) Determine the reactions at each contact point. 8

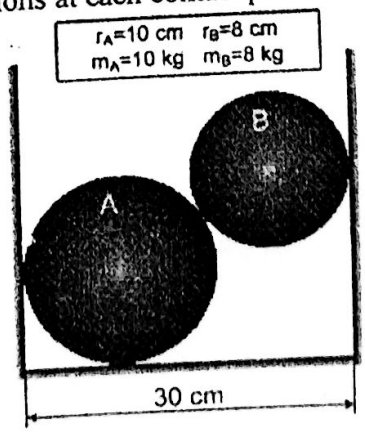

2. a) The 100N block A and the 150N block B are supported by an inclined surface that is held in the position as shown knowing that the coefficient of static friction is 0.15 between all surfaces of contact, determine the value of θ for which motion is impending. 7

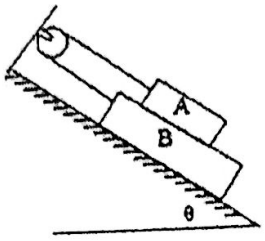

b) Find the member forces of the given truss. 8

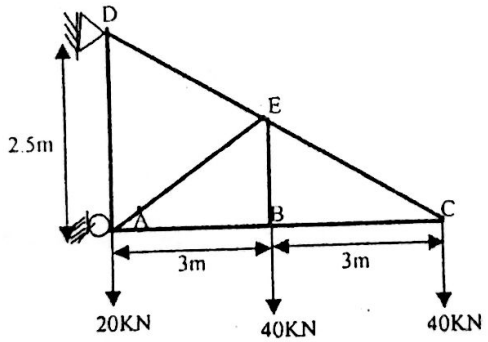

3. a) Find the centroid of the shaded area in figure shown below. 7

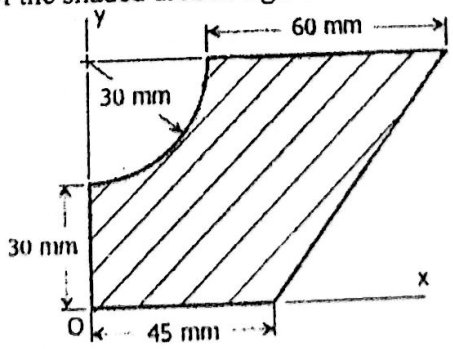

b) Find the moment of inertia of the geometry. 8

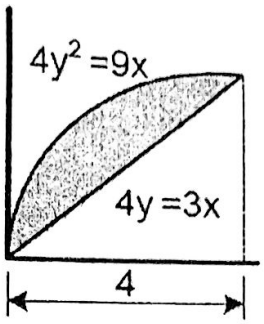

4 Draw shear force and bending moment diagram of the given beam shown. Also find point of zero shear and point of contra-flexure if exist. 15

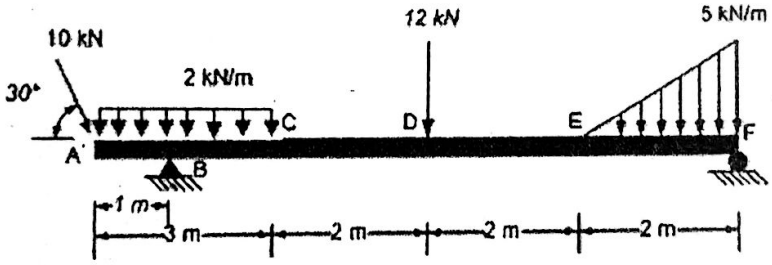

5. a) The motion of a particle is defined by a relation $x = t^3 - 9t^2 + 24t - 8$ where x and t are expressed in meters and seconds respectively. Determine: 7

i. the time at which the velocity is zero

ii. the position and the total distance travelled when the acceleration is zero.

OR

A bus starts from rest on a curve of 300 m radius and accelerates at the constant rate $a_t = 0.8\ m/s^2$. Determine the distance and the time that the bus will travel before the magnitude of its total acceleration is $1.1\ m/s^2$.

b) A homeowner uses a snowblower to clean his driveway. Knowing that the snow is discharged at an average angle of 40° with the horizontal, determine the initial velocity v_0 of the snow. 8

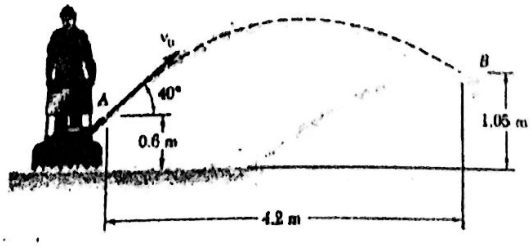

6. a) Rod OA rotates about O in a horizontal plane. The motion of the 300-g collar B is defined by the relations $r = [300 + 100 \cos(0.5\pi t)]$ and $\theta = \pi(t^2 - 3t)$, where r is expressed in mm, t in seconds, and θ in radians. Determine the radial and transverse components of the force exerted on the collar when (a) t = 0, (b) t = 0.5 s. 7

b) The two blocks (M_A=100 kg, M_B=150 kg) shown are originally at rest. Assuming that the coefficients of friction between the blocks and the inclines are μs =0.25 and μk =0.20, determine: 8

i) acceleration of block A

ii) tension in the cord

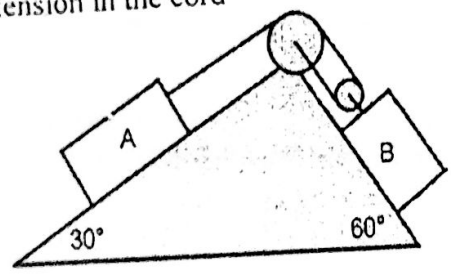

OR

The coefficient of friction between blocks A and C and horizontal surfaces are μ_s=0.24 and μ_k = 0.2 knowing that M_A = 5kg, M_B = 10kg and M_C = 10kg. Determine,

i. The tension in the cord

ii. The acceleration of each block

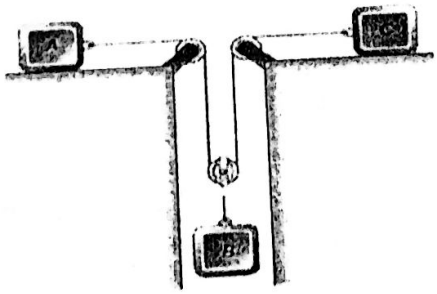

7. Write short notes on: **(Any two)** 2×5

a) Fundamental principles of applied mechanics

b) Polar and Cartesian Coordinate System

c) Prove: Moment of couple is a 'Free Vector'

d) Conservation of linear and angular momentum