Technical Environmental Systems

Academic Year 2017/2018

Professors | Renzo Marchesi | Behzad Najafi

ENERGY CONSUMPTION EVALUATION REPORT

Students Group ZELENOV EVGENY

Building Analisys

The building considered for this first exercise is composed by a rectangular shape of 30 by 40 meters, developed into three levels.
First and second floor contain four surrounding open offices rooms and one conference room in the centre despite the groundfloor which is used as a hall.
Morover there are windows surrounding all the facades on the three floors, protected by shading systems from the overheating during daytime.

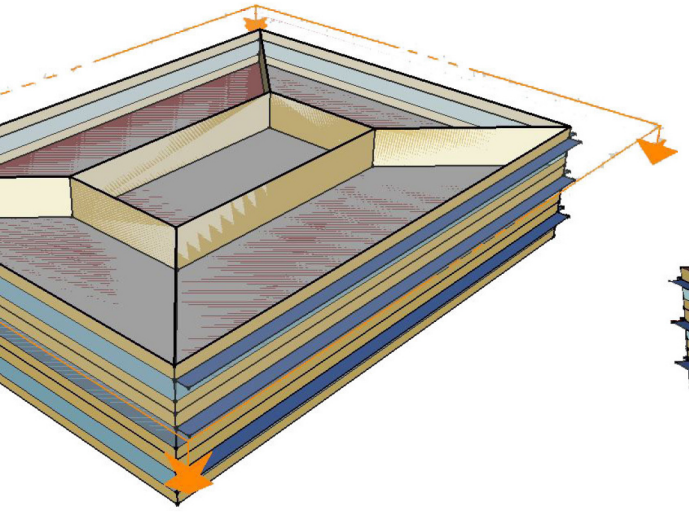

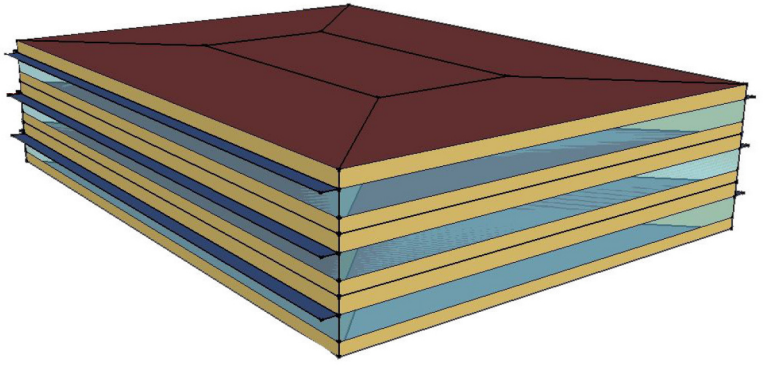

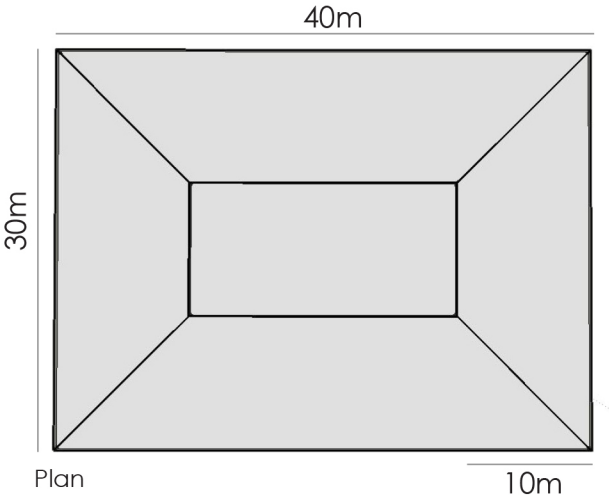

2

Ground floor

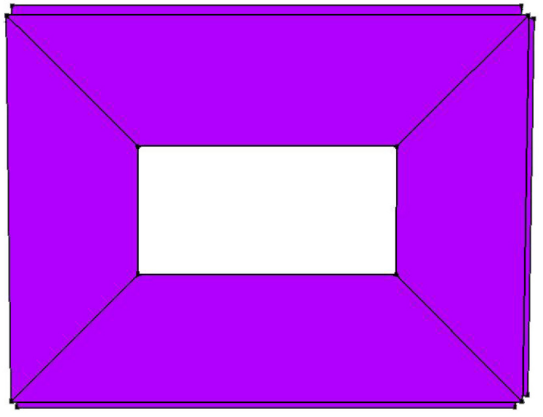

First and second floor

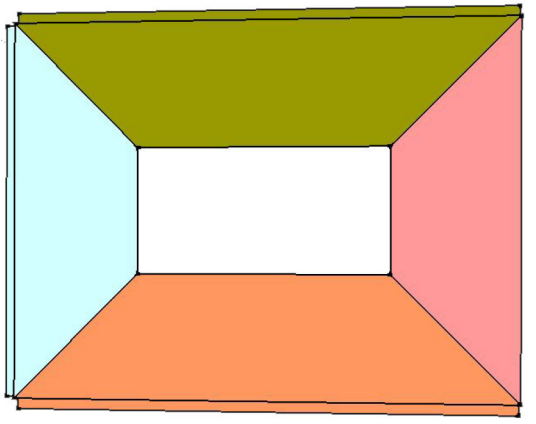

Thermal zones

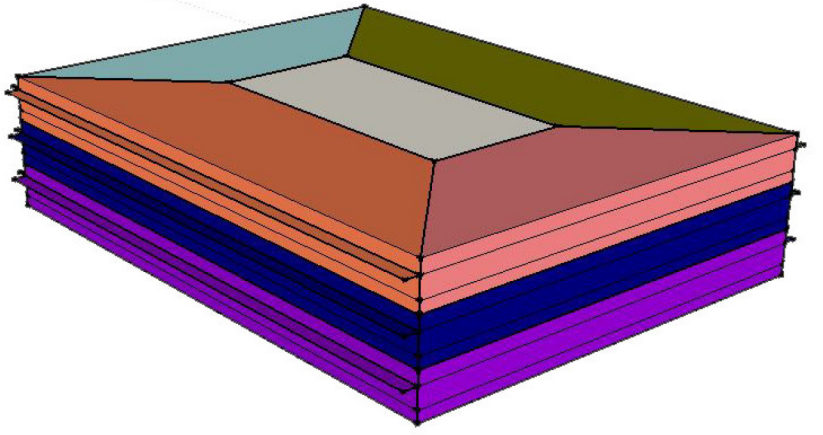

According to the three levels I gave different thermal zones. On the groundfloor, the hall, I have two thermal zones devided in central area and surrounding.
In the other remaining two floors have each room (office or conference room) has his own thermal zone.

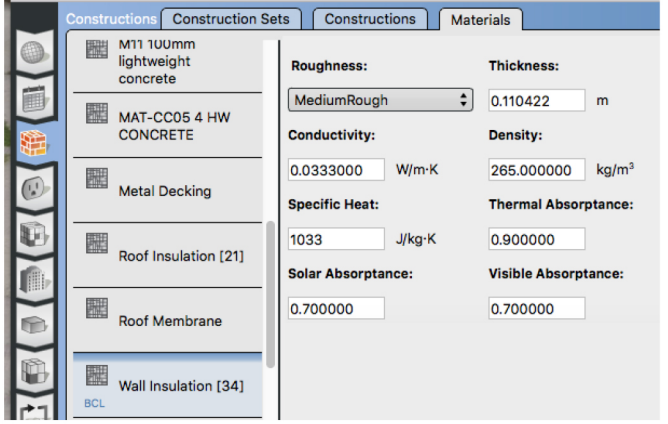

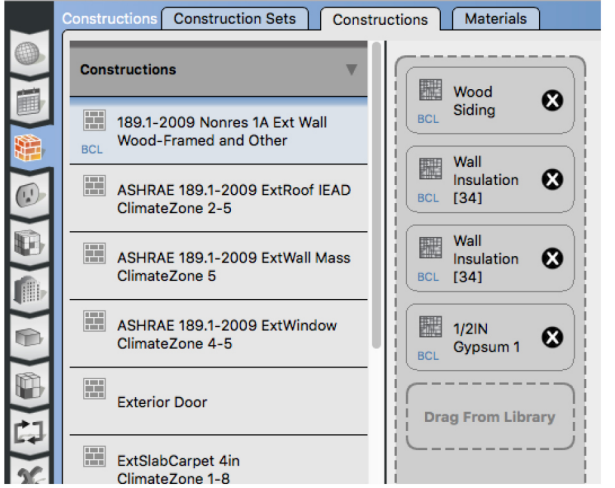

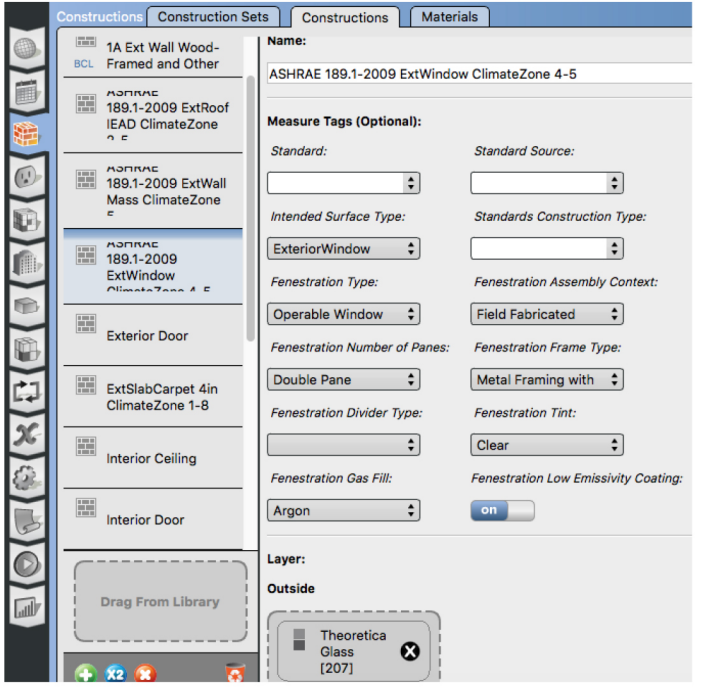

Trying to succeed the energy class of low energy building consumption, I provided a different construction solution from the basic one given by the Software.
So I introduced a wooden structure improving the insulation layer and changed the composition of the windows.

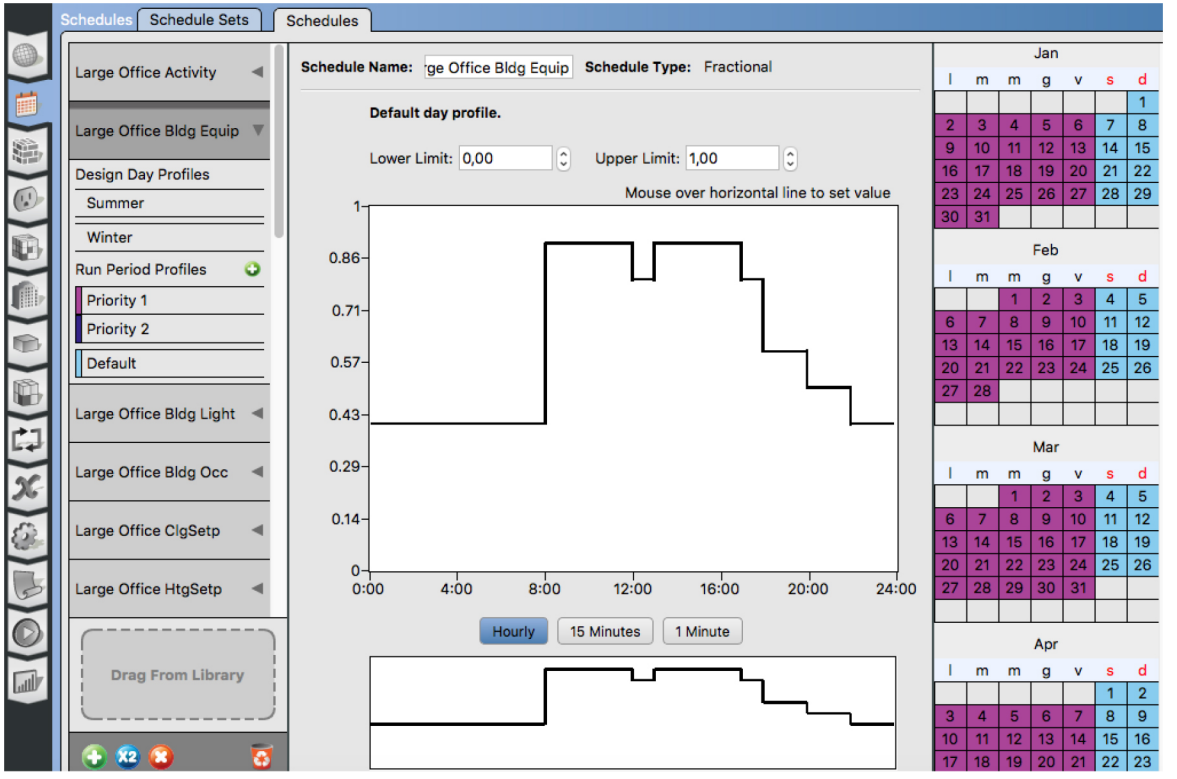

I extimate the working time of the building from 8:00 o'clock until 18:00 o'clock as a commercial building with a brake in a daytime of one hour taking in account as lunch time.
So it is possible to set when there is the maximum of energy consumption.

Reports: EnergyPlus Results

Program Version:**EnergyPlus, Version 8.6.0-198c6a3cff, YMD=2017.12.06 10:10**

Tabular Output Report in Format: **HTML**

Building: **Building 1**

Environment: **RUN PERIOD 1 ** Piacenza - ITA IGDG WMO#=160840**

Simulation Timestamp: **2017.12.06 10:10**

Report: **Annual Building Utility Performance Summary**

For: **Entire Facility**

Timestamp: **2017.12.06 10:10**

Values gathered over 8760.00 hours

Building Area

	Area [m2]
Total Building Area	3600.00
Net Conditioned Building Area	3600.00
Unconditioned Building Area	0.00

Site to Source Energy Conversion Factors

	Site=>Source Conversion Factor
Electricity	3.167
Natural Gas	1.084
District Cooling	1.056
District Heating	3.613
Steam	0.300
Gasoline	1.050
Diesel	1.050
Coal	1.050
Fuel Oil #1	1.050
Fuel Oil #2	1.050
Propane	1.050
Other Fuel 1	1.000
Other Fuel 2	1.000

4

Site and Source Energy

	Total Energy [GJ]	Energy Per Total Building Area [MJ/m2]	Energy Per Conditioned Building Area [MJ/m2]
Total Site Energy	1533.71	426.03	426.03
Net Site Energy	1533.71	426.03	426.03
Total Source Energy	3986.73	1107.43	1107.43
Net Source Energy	3986.73	1107.43	1107.43

End Uses

	Electricity [GJ]	Natural Gas [GJ]	Additional Fuel [GJ]	District Cooling [GJ]	District Heating [GJ]	Water [m3]
Heating	0.00	0.00	0.00	0.00	186.45	0.00
Cooling	0.00	0.00	0.00	465.64	0.00	0.00
Interior Lighting	458.91	0.00	0.00	0.00	0.00	0.00
Exterior Lighting	0.00	0.00	0.00	0.00	0.00	0.00
Interior Equipment	431.69	0.00	0.00	0.00	0.00	0.00

As first trial I considered the building located in Piacenza.
From the graph we can see the total value of Energy consumption corresponding to the entire surface of 3600 square meters.

Reports: EnergyPlus Results

Program Version:**EnergyPlus, Version 8.6.0-198c6a3cff, YMD= 2017.12.06 10:10**

Tabular Output Report in Format: **HTML**

Building: **Building 1**

Environment: **RUN PERIOD 1 ** ANTANANARIVO - MDG IWEC Data WMO#=670830**

Simulation Timestamp: **2017.12.06 10:10**

Report: **Annual Building Utility Performance Summary**

For: **Entire Facility**

Timestamp: **2017.12.06 10:10**

Values gathered over 8760.00 hours

Building Area

	Area [m2]
Total Building Area	3600.00
Net Conditioned Building Area	3600.00
Unconditioned Building Area	0.00

Site to Source Energy Conversion Factors

	Site=>Source Conversion Factor
Electricity	3.167
Natural Gas	1.084
District Cooling	1.056
District Heating	3.613
Steam	0.300
Gasoline	1.050
Diesel	1.050
Coal	1.050
Fuel Oil #1	1.050
Fuel Oil #2	1.050
Propane	1.050
Other Fuel 1	1.000
Other Fuel 2	1.000

Site and Source Energy

	Total Energy [GJ]	Energy Per Total Building Area [MJ/m2]	Energy Per Conditioned Building Area [MJ/m2]
Total Site Energy	1814.47	504.02	504.02
Net Site Energy	1814.47	504.02	504.02
Total Source Energy	3799.26	1055.35	1055.35
Net Source Energy	3799.26	1055.35	1055.35

End Uses

	Electricity [GJ]	Natural Gas [GJ]	Additional Fuel [GJ]	District Cooling [GJ]	District Heating [GJ]	Water [m3]
Heating	0.00	0.00	0.00	0.00	1.33	0.00
Cooling	0.00	0.00	0.00	922.53	0.00	0.00
Interior Lighting	458.91	0.00	0.00	0.00	0.00	0.00
Exterior Lighting	0.00	0.00	0.00	0.00	0.00	0.00
Interior Equipment	431.69	0.00	0.00	0.00	0.00	0.00

I tryed to compare the first result with some other examples changing the location of the building in object.
This case is situated in Madagascar, city of Antananarivo, where you can find a tropical hot clime. According to the data we can see that the level of energy consumption is encreased a lot. In fact the cooling consumption is very high compared to Piacenza case.

Reports: EnergyPlus Results

Program Version:**EnergyPlus, Version 8.6.0-198c6a3cff, YMD= 2017.12.06 10:10**

Tabular Output Report in Format: **HTML**

Building: **Building 1**

Environment: **RUN PERIOD 1 ** MOSCOW - RUS IWEC Data WMO#=276120**

Simulation Timestamp: **2017.12.06 10:10**

Report: **Annual Building Utility Performance Summary**

For: **Entire Facility**

Timestamp: **2017.12.06 10:10**

Values gathered over 8760.00 hours

Building Area

	Area [m2]
Total Building Area	3600.00
Net Conditioned Building Area	3600.00
Unconditioned Building Area	0.00

Site to Source Energy Conversion Factors

	Site=>Source Conversion Factor
Electricity	3.167
Natural Gas	1.084
District Cooling	1.056
District Heating	3.613
Steam	0.300
Gasoline	1.050
Diesel	1.050
Coal	1.050
Fuel Oil #1	1.050
Fuel Oil #2	1.050
Propane	1.050
Other Fuel 1	1.000
Other Fuel 2	1.000

6 **Site and Source Energy**

	Total Energy [GJ]	Energy Per Total Building Area [MJ/m2]	Energy Per Conditioned Building Area [MJ/m2]
Total Site Energy	1671.42	464.28	464.28
Net Site Energy	1671.42	464.28	464.28
Total Source Energy	5041.07	1400.30	1400.30
Net Source Energy	5041.07	1400.30	1400.30

End Uses

	Electricity [GJ]	Natural Gas [GJ]	Additional Fuel [GJ]	District Cooling [GJ]	District Heating [GJ]	Water [m3]
Heating	0.00	0.00	0.00	0.00	541.43	0.00
Cooling	0.00	0.00	0.00	228.83	0.00	0.00
Interior Lighting	458.91	0.00	0.00	0.00	0.00	0.00
Exterior Lighting	0.00	0.00	0.00	0.00	0.00	0.00
Interior Equipment	431.69	0.00	0.00	0.00	0.00	0.00

To try to reduce the energy consumption we tryed to move the building to another country with different weather conditions. In this trial we decide to choose Russia, city of Moscow. As we can see the result is better than before, but not enough to reduce the consumption compared to the initial Piacenza case study. In fact the heating consuptin here is more present than in the other places.

Reports: EnergyPlus Results

Program Version:**EnergyPlus, Version 8.6.0-198c6a3cff, YMD=2017.12.06 10:10**

Tabular Output Report in Format: **HTML**

Building: **Building 1**

Environment: **RUN PERIOD 1 ** Joslin Fld Magic Va Twin Fall ID USA TMY3 WMO#=725866**

Simulation Timestamp: **2017.12.06 10:10**

Report: **Annual Building Utility Performance Summary**

For: **Entire Facility**

Timestamp: **2017.12.06 10:10**

Values gathered over 8760.00 hours

Building Area

	Area [m2]
Total Building Area	3600.00
Net Conditioned Building Area	3600.00
Unconditioned Building Area	0.00

Site to Source Energy Conversion Factors

	Site=>Source Conversion Factor
Electricity	3.167
Natural Gas	1.084
District Cooling	1.056
District Heating	3.613
Steam	0.300
Gasoline	1.050
Diesel	1.050
Coal	1.050
Fuel Oil #1	1.050
Fuel Oil #2	1.050
Propane	1.050
Other Fuel 1	1.000
Other Fuel 2	1.000

Site and Source Energy

	Total Energy [GJ]	Energy Per Total Building Area [MJ/m2]	Energy Per Conditioned Building Area [MJ/m2]
Total Site Energy	1526.48	424.02	424.02
Net Site Energy	1526.48	424.02	424.02
Total Source Energy	4008.52	1113.48	1113.48
Net Source Energy	4008.52	1113.48	1113.48

End Uses

	Electricity [GJ]	Natural Gas [GJ]	Additional Fuel [GJ]	District Cooling [GJ]	District Heating [GJ]	Water [m3]
Heating	0.00	0.00	0.00	0.00	202.02	0.00
Cooling	0.00	0.00	0.00	433.85	0.00	0.00
Interior Lighting	458.91	0.00	0.00	0.00	0.00	0.00
Exterior Lighting	0.00	0.00	0.00	0.00	0.00	0.00
Interior Equipment	431.69	0.00	0.00	0.00	0.00	0.00

So we changed again the position and we moved to United Sates, Twin Fall city, Idaho. The result is clearly positive, we have less energy consumption than the other three cases before. In fact this values are the most balanced of the examples. Mantaining the same constructive materials the less energy consumption building is the one located in the most mild climate zone.

Reports: EnergyPlus Results

Program Version:**EnergyPlus, Version 8.6.0-198c6a3cff, YMD=2017.12.14 16:34**

Tabular Output Report in Format: **HTML**

Building: **Building 1**

Environment: **RUN PERIOD 1 ** MOSCOW - RUS IWEC Data WMO#=276120**

Simulation Timestamp: **2017-12-14 16:34:45**

Report: **Annual Building Utility Performance Summary**

For: **Entire Facility**

Timestamp: **2017-12-14 16:34:45**

Values gathered over 8760.00 hours

Building Area

	Area [m2]
Total Building Area	3600.00
Net Conditioned Building Area	3600.00
Unconditioned Building Area	0.00

Site to Source Energy Conversion Factors

	Site=>Source Conversion Factor
Electricity	3.167
Natural Gas	1.084
District Cooling	1.056
District Heating	3.613
Steam	0.300
Gasoline	1.050
Diesel	1.050
Coal	1.050
Fuel Oil #1	1.050
Fuel Oil #2	1.050
Propane	1.050
Other Fuel 1	1.000
Other Fuel 2	1.000

6 **Site and Source Energy**

	Total Energy [GJ]	Energy Per Total Building Area [MJ/m2]	Energy Per Conditioned Building Area [MJ/m2]
Total Site Energy	2002.49	556.25	556.25
Net Site Energy	2002.49	556.25	556.25
Total Source Energy	6241.65	1733.79	1733.79
Net Source Energy	6241.65	1733.79	1733.79

End Uses

	Electricity [GJ]	Natural Gas [GJ]	Additional Fuel [GJ]	District Cooling [GJ]	District Heating [GJ]	Water [m3]
Heating	0.00	0.00	0.00	0.00	878.66	0.00
Cooling	0.00	0.00	0.00	233.22	0.00	0.00
Interior Lighting	458.91	0.00	0.00	0.00	0.00	0.00
Exterior Lighting	0.00	0.00	0.00	0.00	0.00	0.00
Interior Equipment	431.69	0.00	0.00	0.00	0.00	0.00
Total End Uses	890.61	0.00	0.00	233.22	878.66	0.00

Note: District heat appears to be the principal heating source based on energy usage.

Another option was to identify negative impact if the insulation is no longer included in the system. To do this I choosed city Moscow, where whether conditions are much colder than in Piacenza. As a result the energy consumption rised in many times as without an insulation the buildng can not keep the heatduring daily use.