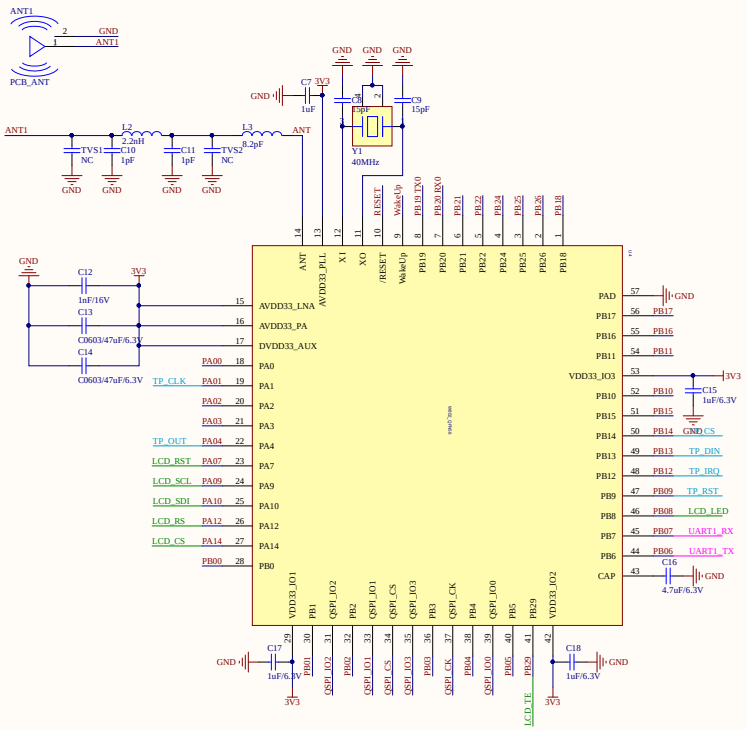

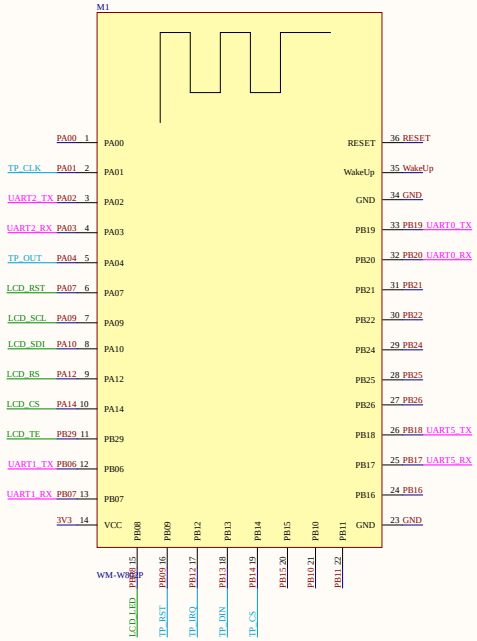

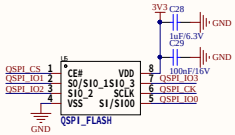

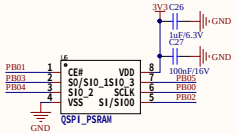

Title			
Size Orcad C	Number		Revision
Date: 2023/9/8		Sheet of	
File: C:\Users\..\main_board.SchDoc		Drawn By:	

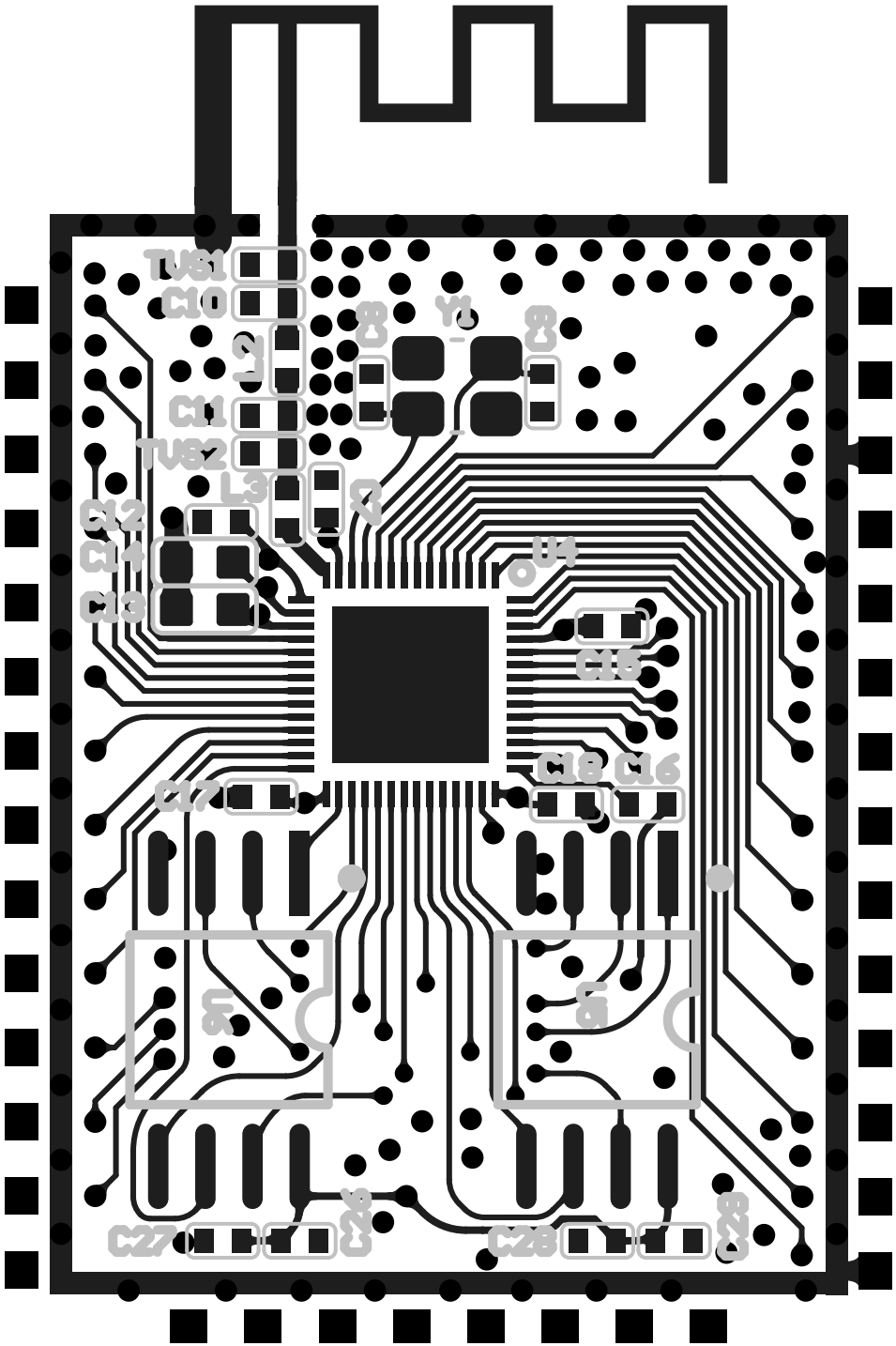
TVS1
C10
C11
TVS2
L3
C12
C14
C13
Y1
U1
C15
C18
C16
C17
C27
C28