SUMMING AMPLIFIER (U1)

HP = −(Rf/R1) * LP − (Rf/R2) * BP (Rf = R3 = 10k)

LP gain = −(10k/10k) = −1.0 BP gain = −(10k/22k) = −0.455 Q = 2.2

FUNCTION: Combines LP and BP feedback signals with phase inversion.

The HP output feeds both integrators, closing the oscillation loop.

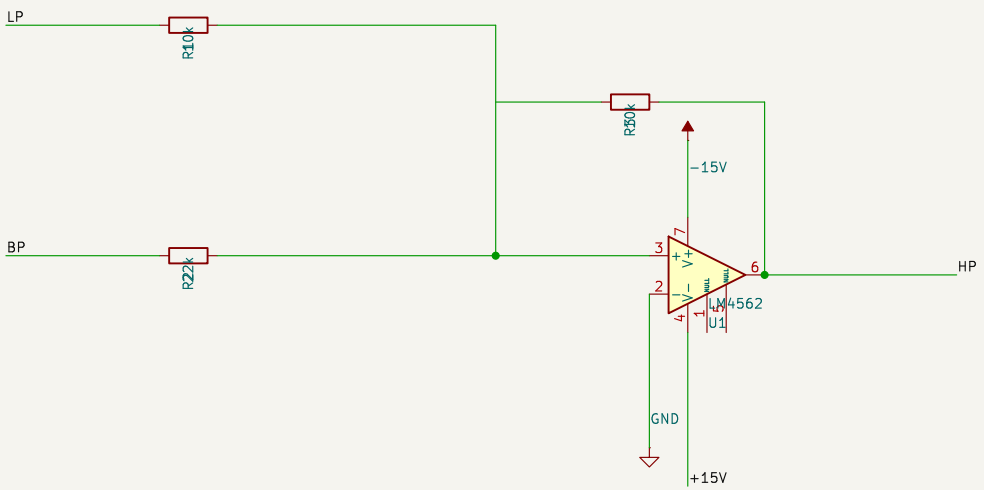

Interfaces:

LP input: from Integrator 2 (U3) output

BP input: from Integrator 1 (U2) output

HP output: to Integrator 1 (U2) via DAC7800 XDAC1

Block 1 of 6
LP gain = −1.0, BP gain = −0.455, Q = 2.2
HP = −(Rf/R1)*LP − (Rf/R2)*BP, Rf=R3=10k
CircuitForge
Sheet: /
File: osc_block_summing_amp.kicad_sch

Title: State Variable Oscillator – Summing Amplifier

Size: A4	Date:	**Rev: 1.0**
KiCad E.D.A. 9.0.7		Id: 1/1

INTEGRATOR 1: HP -> BP (U2 + XDAC1)

f = D / (4096 * 2pi * R4 * C1) = D / (4096 * 2pi * 10k * 470p)

Frequency range: 25 Hz (D=3) to 30 kHz (D=3640)

FUNCTION: Integrates HP signal to produce BP output. DAC7800 MDAC controls effective resistance, setting oscillation frequency. Zener diodes (D1/D2, BV=1.1V) clamp output to ~1V RMS (passive AGC).

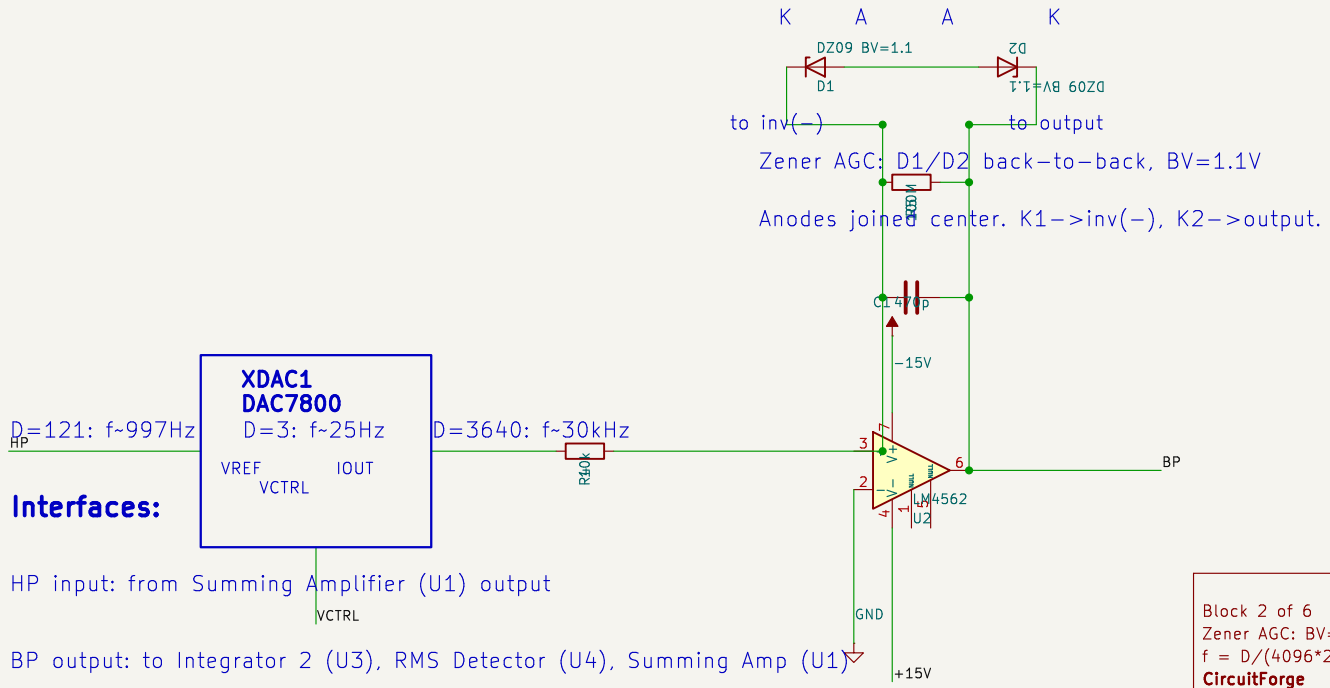

Interfaces:

HP input: from Summing Amplifier (U1) output

BP output: to Integrator 2 (U3), RMS Detector (U4), Summing Amp (U1)

VCTRL: from MCU (U5) SPI0 via DAC7800

Block 2 of 6
Zener AGC: BV=1.1V, BP amplitude ~1V RMS
f = D/(4096*2pi*10k*470p), 25Hz-30kHz
CircuitForge

Sheet: /
File: osc_block_integrator1.kicad_sch

Title: State Variable Oscillator - Integrator 1 (HP to BP)

Size: A4	Date:	**Rev: 1.0**
KiCad E.D.A. 9.0.7		Id: 1/1

AD636 RMS DETECTOR (U4)

Vout_RMS = BP * R11/(R10+R11) = BP * 10k/(40k+10k) = BP/5

AD636 true RMS-to-DC converter, CAV=10uF averaging capacitor

FUNCTION: Converts BP AC signal to DC voltage proportional to RMS

amplitude. 1/5 attenuator scales ~1V RMS to ~200mV for AD636 input.

MCU reads AIN0 to verify oscillation amplitude during calibration.

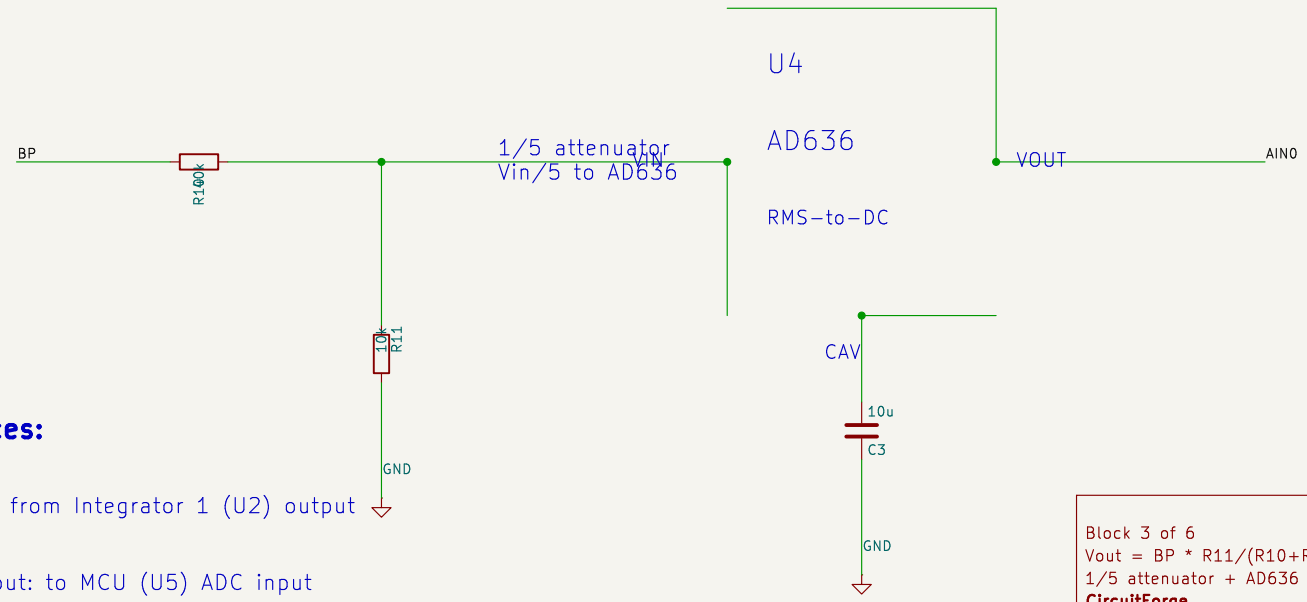

Interfaces:

BP input: from Integrator 1 (U2) output

AIN0 output: to MCU (U5) ADC input

AD636 RMS averaging time constant ~ R_internal * C3 ~ 100ms

Block 3 of 6
Vout = BP * R11/(R10+R11) = BP/5
1/5 attenuator + AD636 true RMS-to-DC
CircuitForge

Sheet: /
File: osc_block_rms_detector.kicad_sch

Title: State Variable Oscillator – AD636 RMS Detector

Size: A4	Date:	**Rev: 1.0**
KiCad E.D.A. 9.0.7		Id: 1/1

INTEGRATOR 2: BP -> LP (U3 + XDAC2)

f = D / (4096 * 2pi * R6 * C2) = D / (4096 * 2pi * 10k * 470p)

Mirrors Integrator 1, R8=100k output load

FUNCTION: Second integrator converts BP to LP, completing the 90-degree phase shift chain. LP feeds back to summing amp, closing the oscillation loop. R8 (100k) provides DC load to prevent charge buildup.

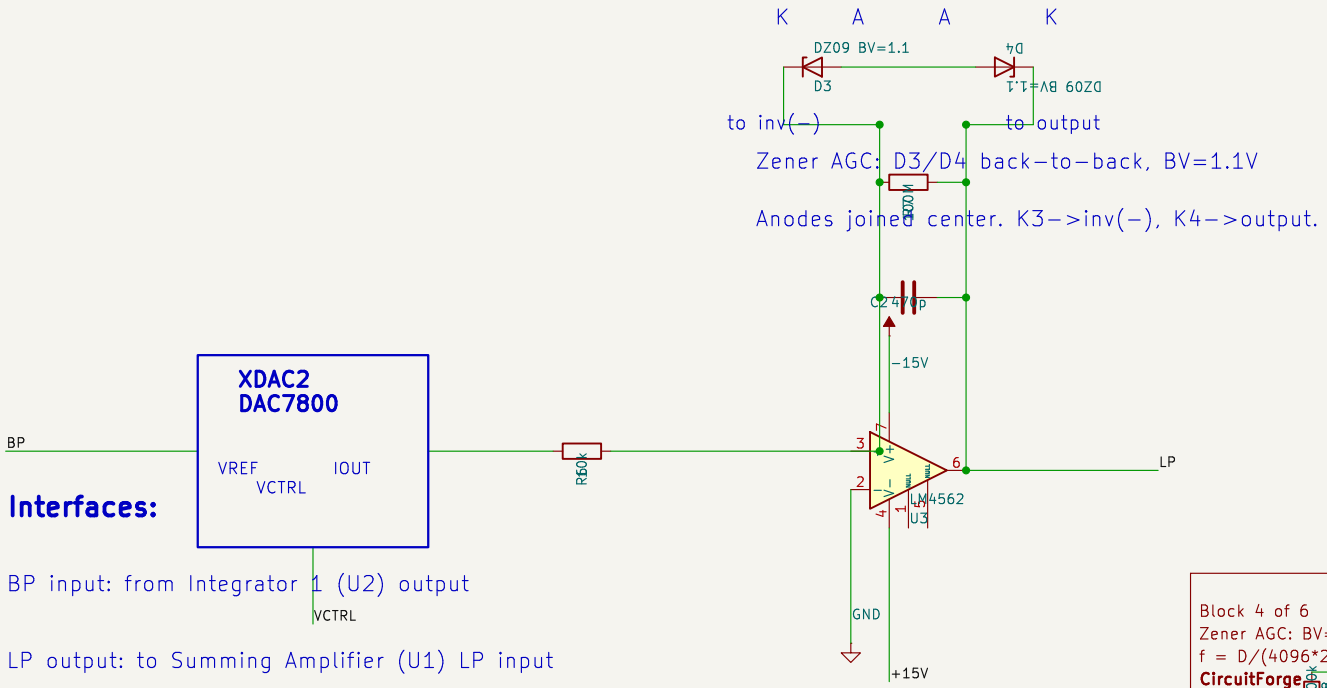

Interfaces:

BP input: from Integrator 1 (U2) output

LP output: to Summing Amplifier (U1) LP input

VCTRL: from MCU (U5) SPI0 via DAC7800

Block 4 of 6
Zener AGC: BV=1.1V, R8=100k output load
f = D/(4096*2pi*10k*470p), mirrors Integrator 1
CircuitForge
Sheet: /
File: osc_block_integrator2.kicad_sch

Title: State Variable Oscillator – Integrator 2 (BP to LP)

Size: A4	Date:	**Rev: 1.0**
KiCad E.D.A. 9.0.7		Id: 1/1

STARTUP KICK + POWER SUPPLY

Startup: R9 injects 0.1V pulse into HP net to initiate oscillation

Power: +15V/−15V analog supply, 3.3V MCU via LDO from +15V

FUNCTION: R9 injects a brief pulse into HP at power−on to break

equilibrium and start oscillation. Bulk caps filter supply noise.

Startup Kick
PULSE(0, 0.1V, 0.1ms, 1ns, 1ns, 10us)

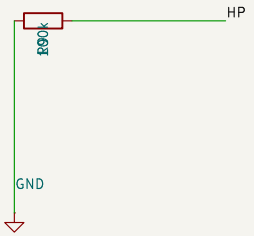

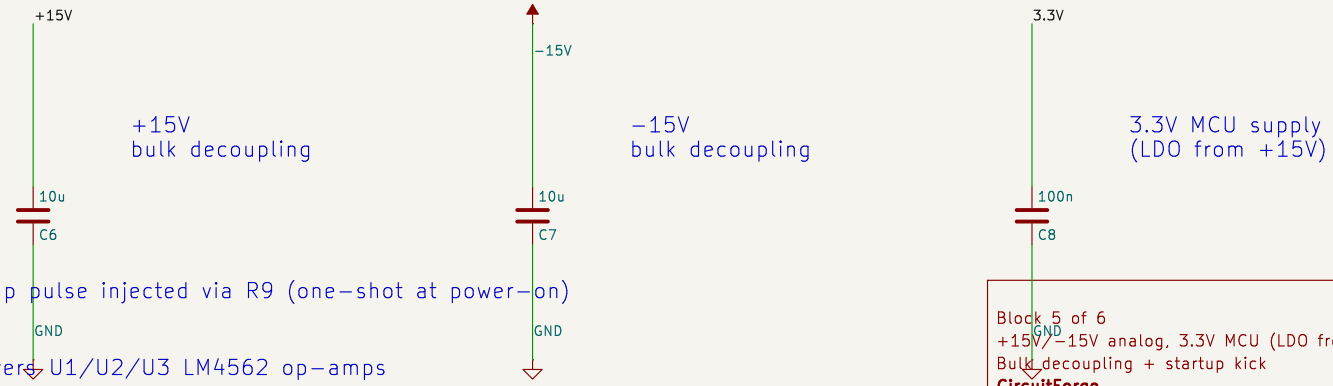

Interfaces:

HP output: startup pulse injected via R9 (one−shot at power−on)

+15V/−15V: powers U1/U2/U3 LM4562 op−amps

3.3V: powers U5 ADuCM362 MCU

Block 5 of 6
+15V/−15V analog, 3.3V MCU (LDO from +15V)
Bulk decoupling + startup kick
CircuitForge

Sheet: /
File: osc_block_power_supply.kicad_sch

Title: State Variable Oscillator − Power Supply + Startup

Size: A4	Date:	**Rev: 1.0**
KiCad E.D.A. 9.0.7		Id: 1/1

ADuCM362 MCU (U5)

ARM Cortex-M3, 24-bit Sigma-Delta ADC, SPI, UART

SPI0 controls dual DAC7800 MDACs, Timer1 measures BP frequency

FUNCTION: Digital brain of the oscillator. Sets frequency via SPI to

DAC7800 MDACs, measures actual frequency via Timer1 capture of BP

zero-crossings (16MHz clock), reads amplitude via 24-bit ADC from AD636.

Runs 16-point self-calibration stored in flash. UART host interface.

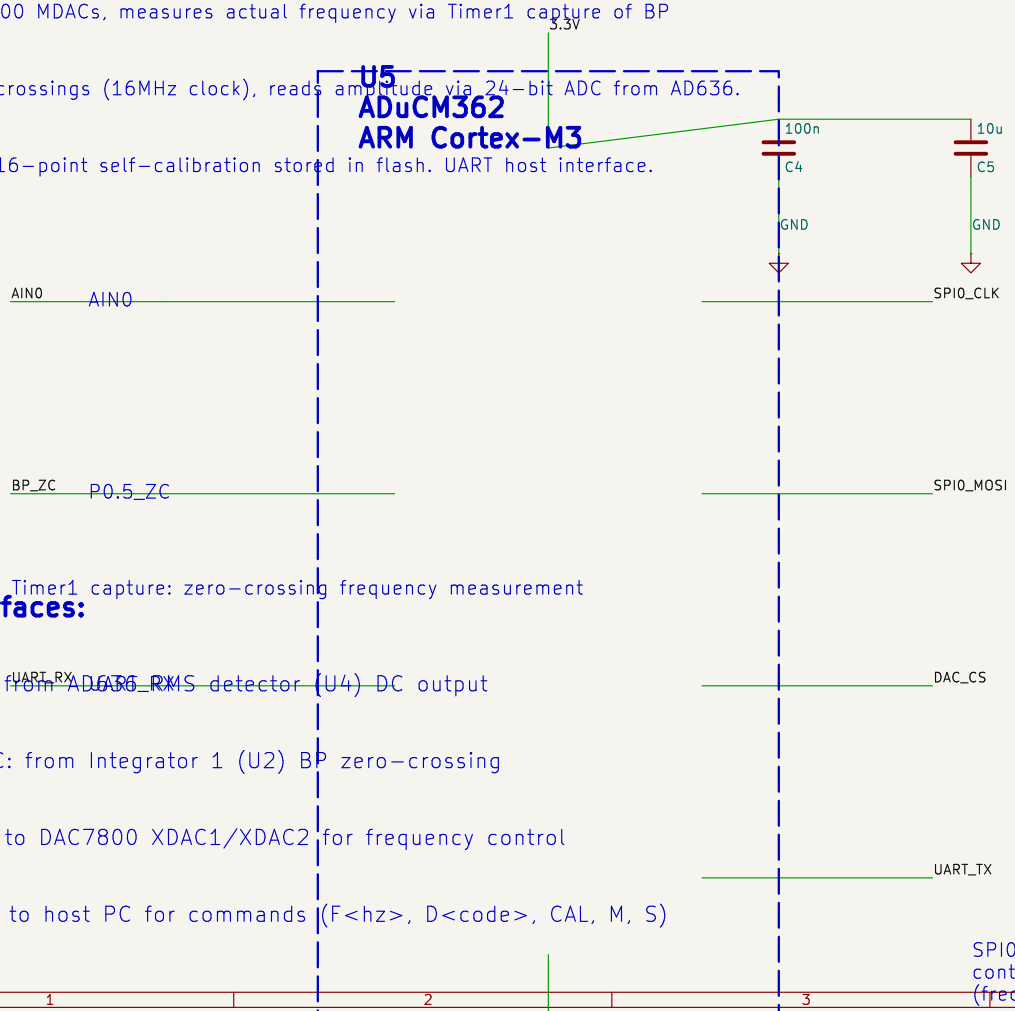

Timer1 capture: zero-crossing frequency measurement

Interfaces:

AIN0: from AD636 RMS detector (U4) DC output

BP_ZC: from Integrator 1 (U2) BP zero-crossing

SPI0: to DAC7800 XDAC1/XDAC2 for frequency control

UART: to host PC for commands (F<hz>, D<code>, CAL, M, S)

SPI0 -> DAC7800
controls VCTRL
(frequency set)

Block 6 of 6
Timer1 zero-crossing, UART 115200 8N1
SPI0->DAC7800 freq ctrl, ADC AIN0<-AD636
CircuitForge
Sheet: /
File: osc_block_mcu.kicad_sch

Title: State Variable Oscillator - ADuCM362 MCU

Size: A4	Date:	**Rev: 1.0**
KiCad E.D.A. 9.0.7		Id: 1/1