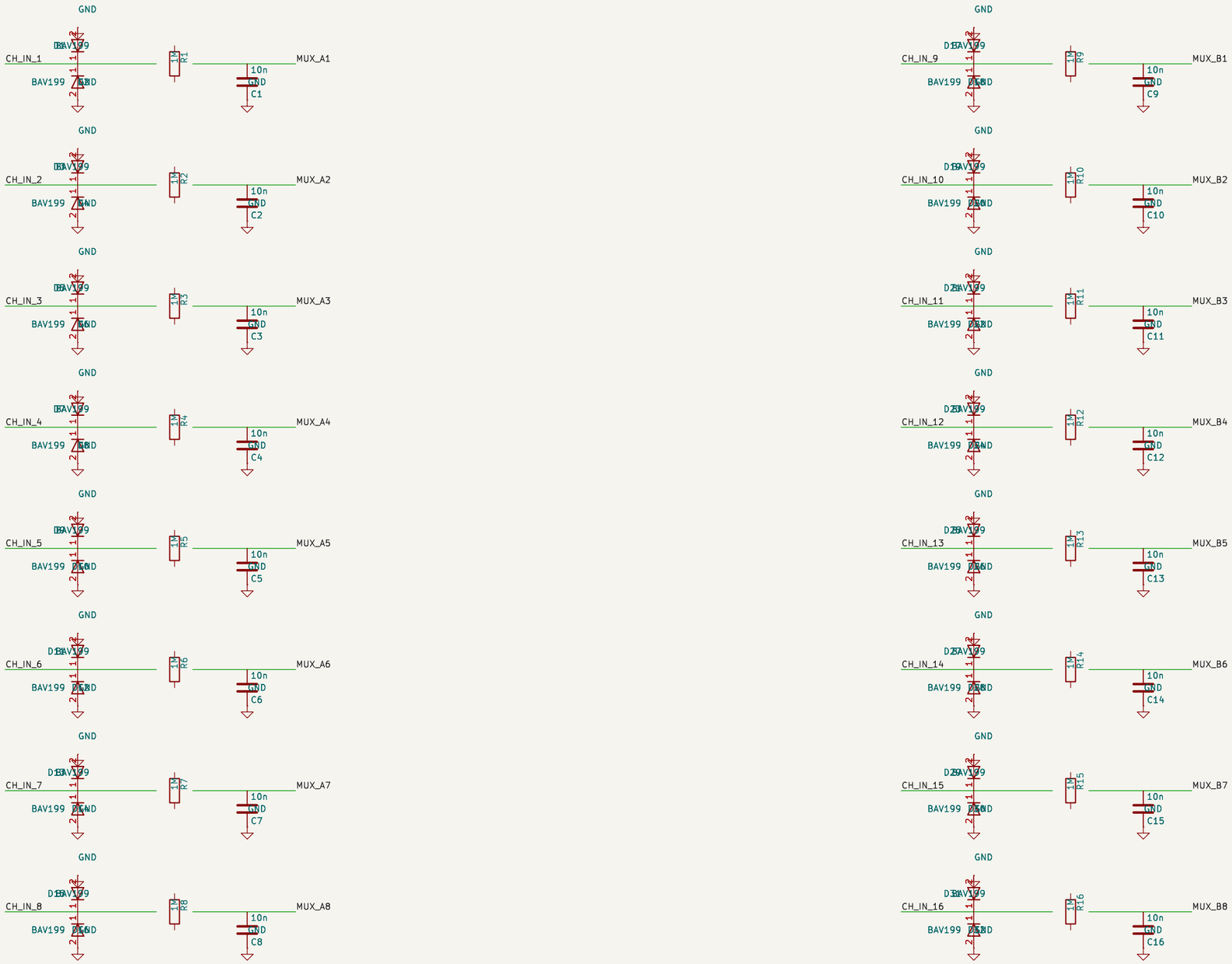

Sheet: /
File: input_filters.kicad_sch

Title: 16-Channel Input Filter Array

Size: A3	Date:	Rev:
KiCad E.D.A. 9.0.7		Id: 1/1

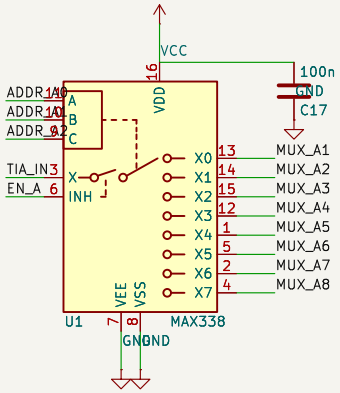

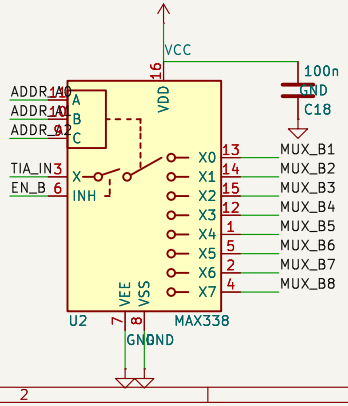

Sheet: /
File: analog_mux.kicad_sch

Title: Analog Multiplexer – 2x MAX338 (CD4051B)

Size: A4	Date:	Rev:
KiCad E.D.A. 9.0.7		Id: 1/1

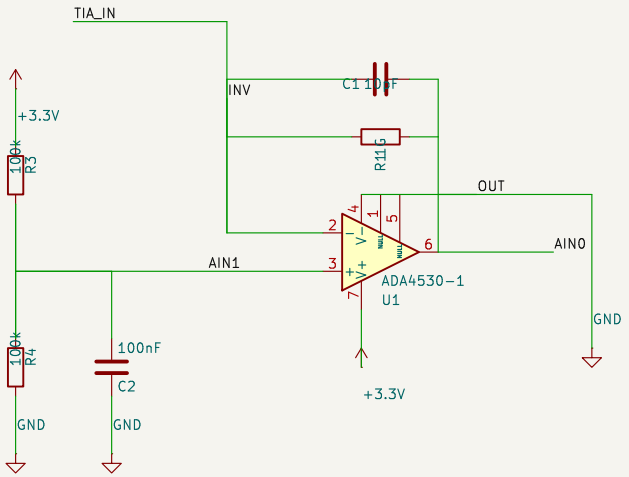

Sheet: /
File: mux_tia.kicad_sch

Title: TIA with Mux Interface – ADA4530-1

Size: A4	Date:	Rev:
KiCad E.D.A. 9.0.7		Id: 1/1

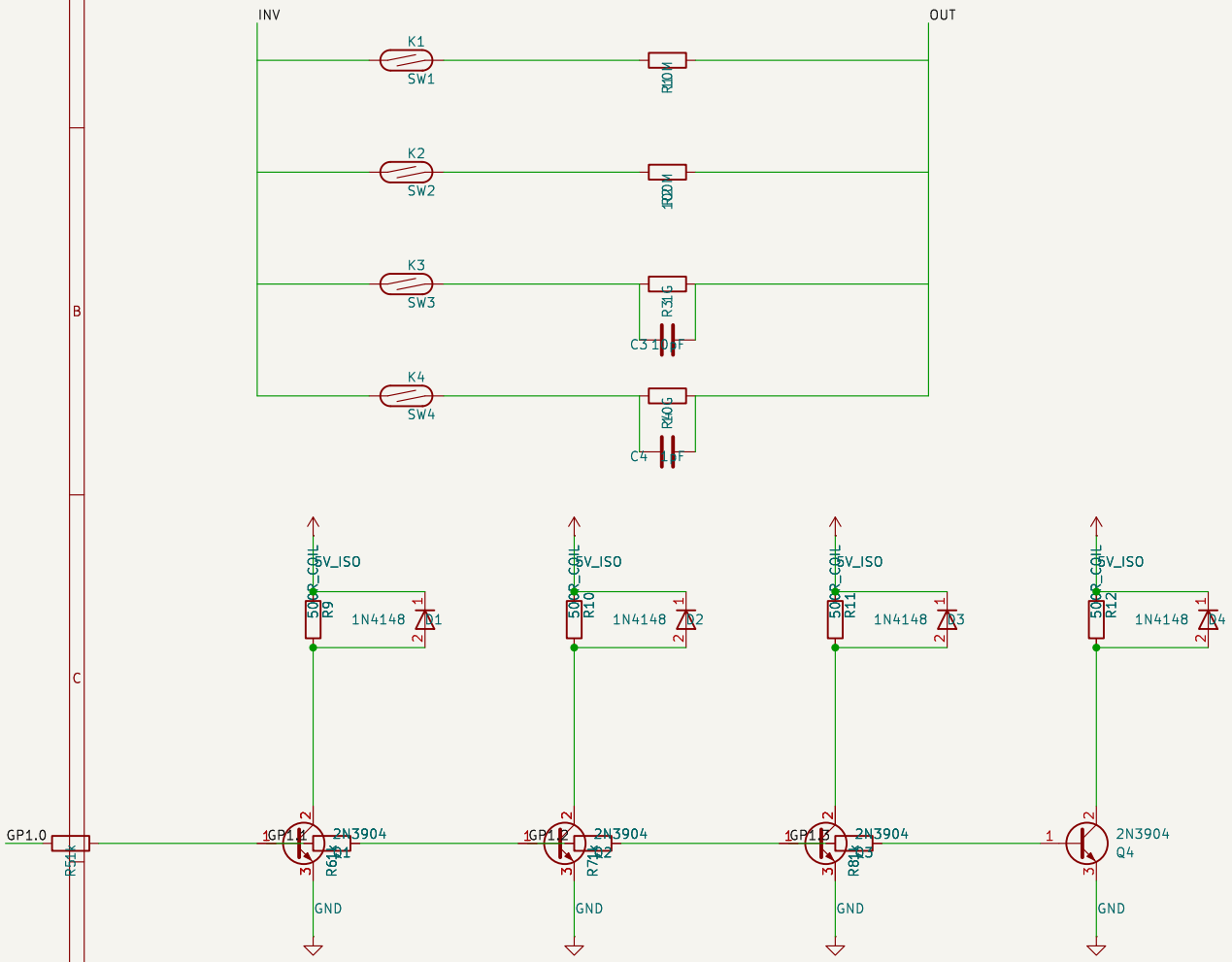

Rf: 10M/100M/1G+10p/10G+1p, controlled by GP1[0:3]
4x 109P-1-A-5/1 SPST reed relays, 2N3904 NPN drivers

Circuit Automation Project

Sheet: /
File: relay_ladder.kicad_sch

Title: Relay Range-Switching Ladder - Electrometer Platform

Size: A4	Date:	**Rev: 1.0**
KiCad E.D.A. 9.0.7		Id: 1/1

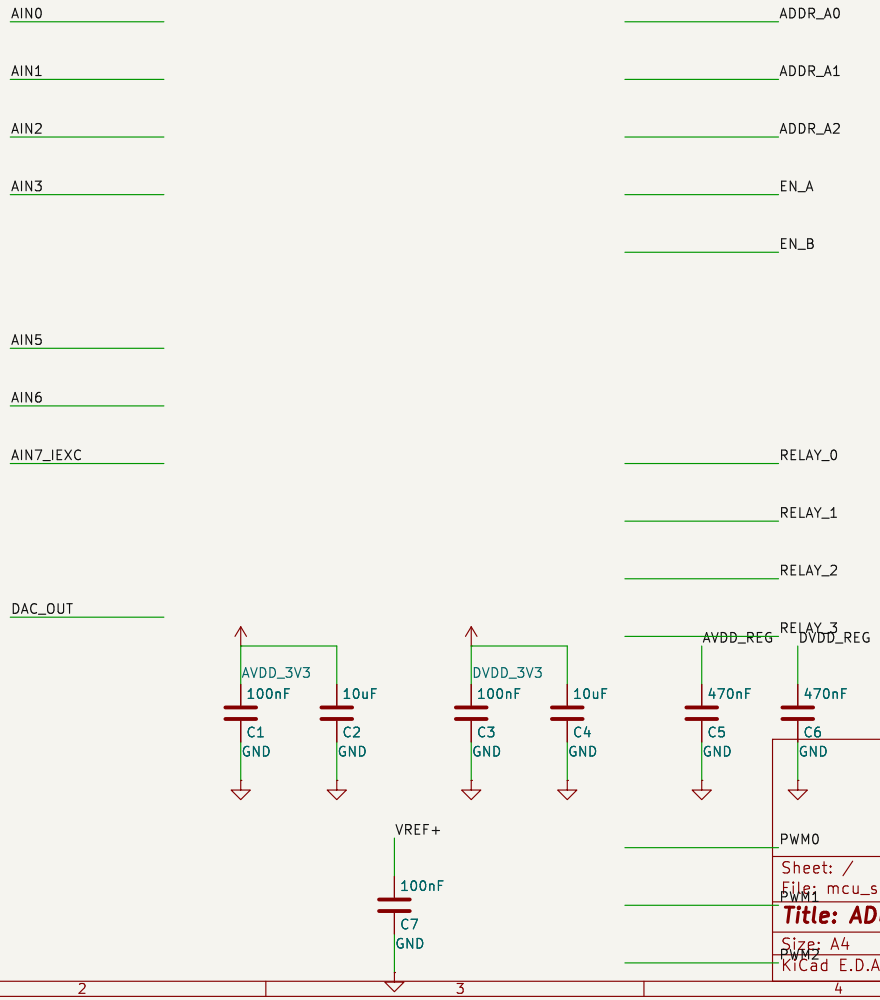

Sheet: /
File: mcu_section.kicad_sch

Title: ADuCM362 MCU + ADC Interface (CN-0359 based)

Size: A4	Date:	Rev:
KiCad E.D.A. 9.0.7		Id: 1/1

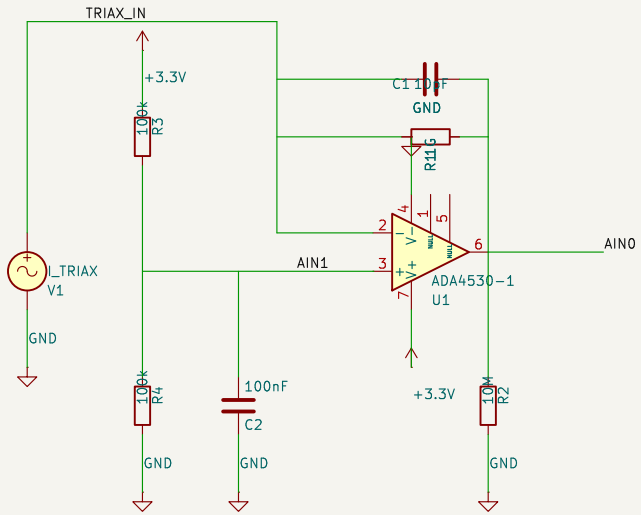

ADC0: AIN0(+)=TIA_OUT, AIN1(−)=VREF. Single supply 3.3V
ADA4530−1 proxy (simulated with LMC6001), 4−range Rf ladder

Circuit Automation Project

Sheet: /
File: electrometer_362.kicad_sch

Title: Electrometer TIA — ADuCM362 Platform

Size: A4	Date:	**Rev: 2.0**
KiCad E.D.A. 9.0.7		Id: 1/1