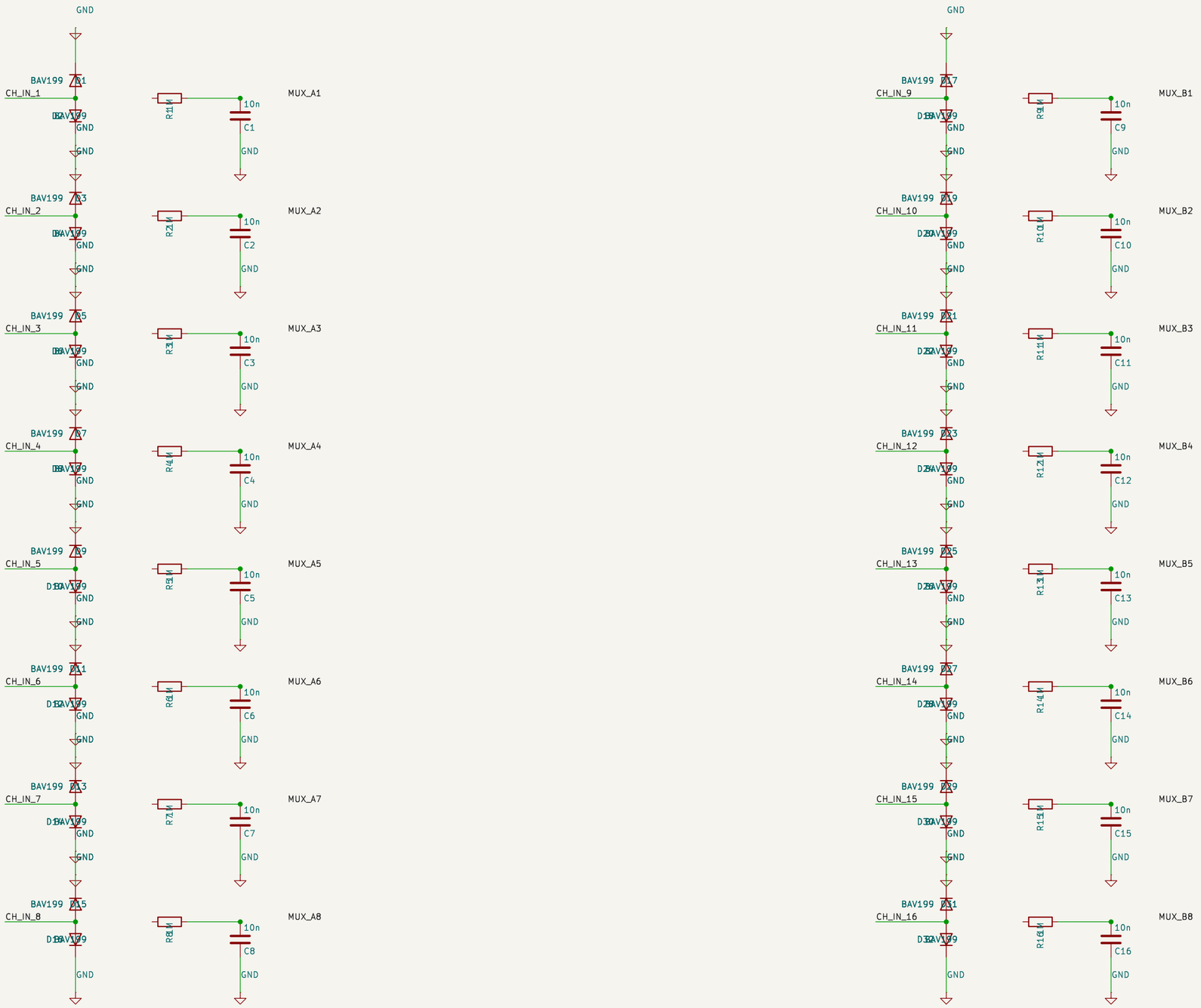


Sheet: /
File: input_filters.kicad_sch

**Title: 16-Channel Input Filter Array**

| | | |
|---|---|---|
| Size: A3 | Date: | Rev: |
| KiCad E.D.A. 9.0.7 | | Id: 1/1 |

# ANALOG MULTIPLEXER (2x MAX338)

16:1 channel select via ADDR[A0:A2] + EN_A/EN_B

FUNCTION: Routes one of 16 input channels to TIA_IN. MUX A handles channels 1–8, MUX B handles 9–16. Only one mux active at a time (inactive mux is high-Z). MCU controls address and enable lines.

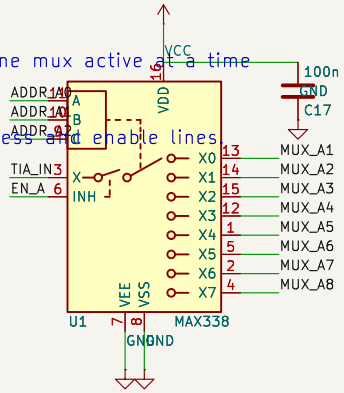


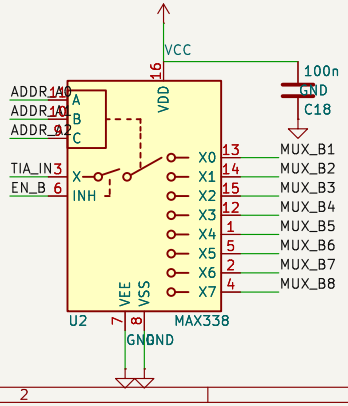


Sheet: /
File: analog_mux.kicad_sch

**Title: Analog Multiplexer – 2x MAX338 (CD4051B)**

| Size: A4 | Date: | Rev: |
|---|---|---|
| KiCad E.D.A. 9.0.7 | | Id: 1/1 |

# TRANSIMPEDANCE AMPLIFIER (ADA4530-1)

Vout = Iin x Rf,  Rf selected by relay ladder (10M to 10G)

FUNCTION: Converts picoamp-level input current to voltage. ADA4530-1

sub-femtoamp bias current enables measurement down to ~50 fA.

VREF (1.65V) biases non-inv input for single-supply 3.3V operation.

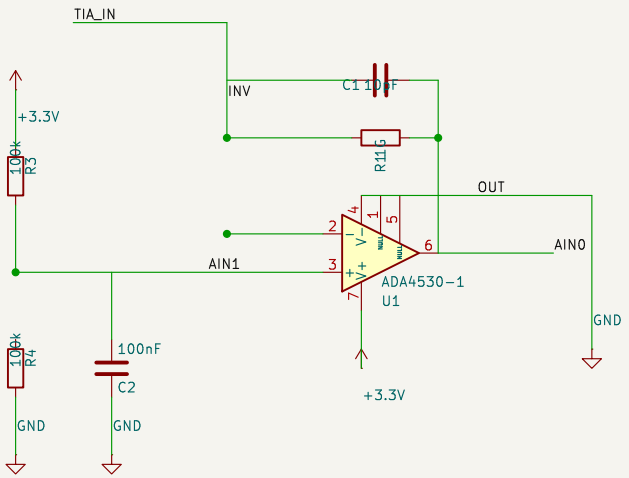


Sheet: /
File: mux_tia.kicad_sch

**Title: TIA with Mux Interface - ADA4530-1**

| Size: A4 | Date: | Rev: |
|---|---|---|
| KiCad E.D.A. 9.0.7 | | Id: 1/1 |

# RELAY RANGE-SWITCHING LADDER

4 decades: Rf = 10M / 100M / 1G / 10G (reed relay SPST)

FUNCTION: Selects TIA feedback resistor via SPST reed relays.

MCU GPIO drives NPN transistor coil drivers. Flyback diodes protect

against relay coil back-EMF. Only one relay closed at a time.

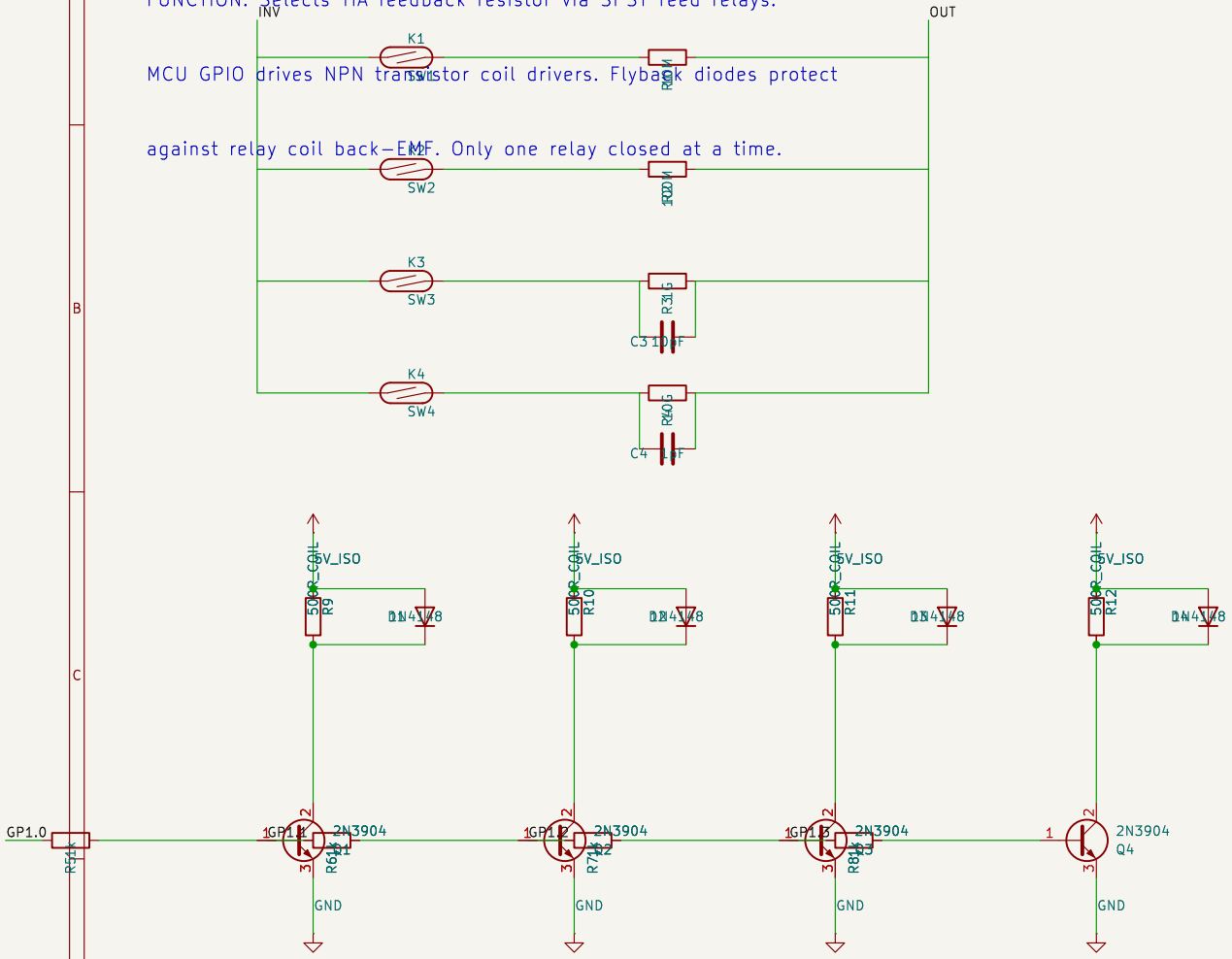


Rf: 10M/100M/1G+10p/10G+1p, controlled by GP1[0:3]
4x 109P-1-A-5/1 SPST reed relays, 2N3904 NPN drivers

**Circuit Automation Project**

Sheet: /
File: relay_ladder.kicad_sch

***Title: Relay Range-Switching Ladder — Electrometer Platform***

| | | |
|---|---|---|
| Size: A4 | Date: | **Rev: 1.0** |
| KiCad E.D.A. 9.0.7 | | Id: 1/1 |

# ADuCM362 MCU + ADC INTERFACE

ARM Cortex-M3, dual 24-bit sigma-delta ADC, CN-0359 reference

FUNCTION: Digital controller for the electrometer platform.

ADC0 reads TIA output (AIN0) vs reference (AIN1). GPIO P0

controls mux address/enable. GPIO P1 drives relay coils.

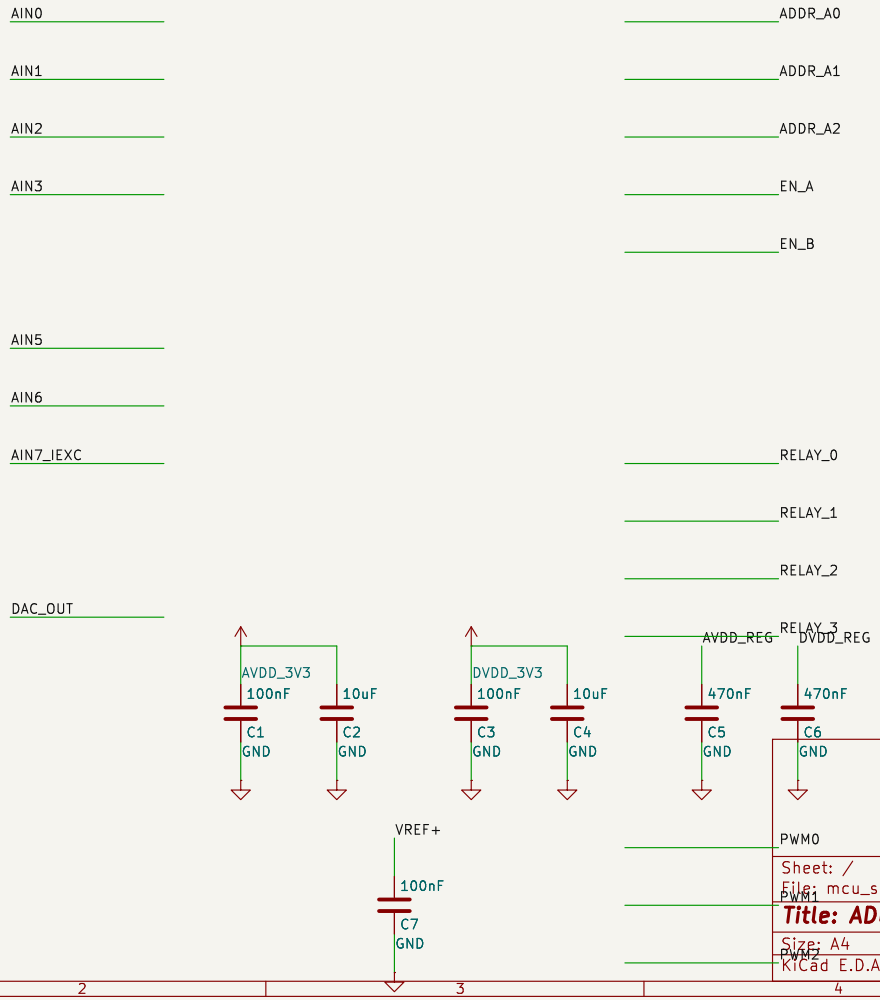


Sheet: /
File: mcu_section.kicad_sch

**Title: ADuCM362 MCU + ADC Interface (CN-0359 based)**

| Size: A4 | Date: | Rev: |
|---|---|---|
| KiCad E.D.A. 9.0.7 | | Id: 1/1 |

# ELECTROMETER TIA (ADuCM362 PLATFORM)

ADA4530-1 TIA, 4-range relay-switched Rf (10M-10G), 24-bit ADC

FUNCTION: Complete electrometer front-end. TIA converts current to

voltage. Relay ladder selects range. ADuCM362 24-bit sigma-delta

ADC reads differential (TIA_OUT - VREF). Single 3.3V supply.

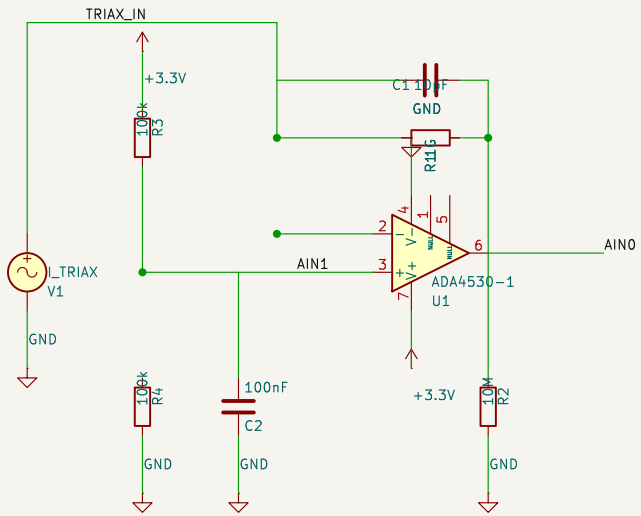


ADC0: AIN0(+)=TIA_OUT, AIN1(-)=VREF. Single supply 3.3V
ADA4530-1 proxy (simulated with LMC6001), 4-range Rf ladder

**Circuit Automation Project**

Sheet: /
File: electrometer_362.kicad_sch

***Title: Electrometer TIA - ADuCM362 Platform***

| | | |
|---|---|---|
| Size: A4 | Date: | **Rev: 2.0** |
| KiCad E.D.A. 9.0.7 | | Id: 1/1 |