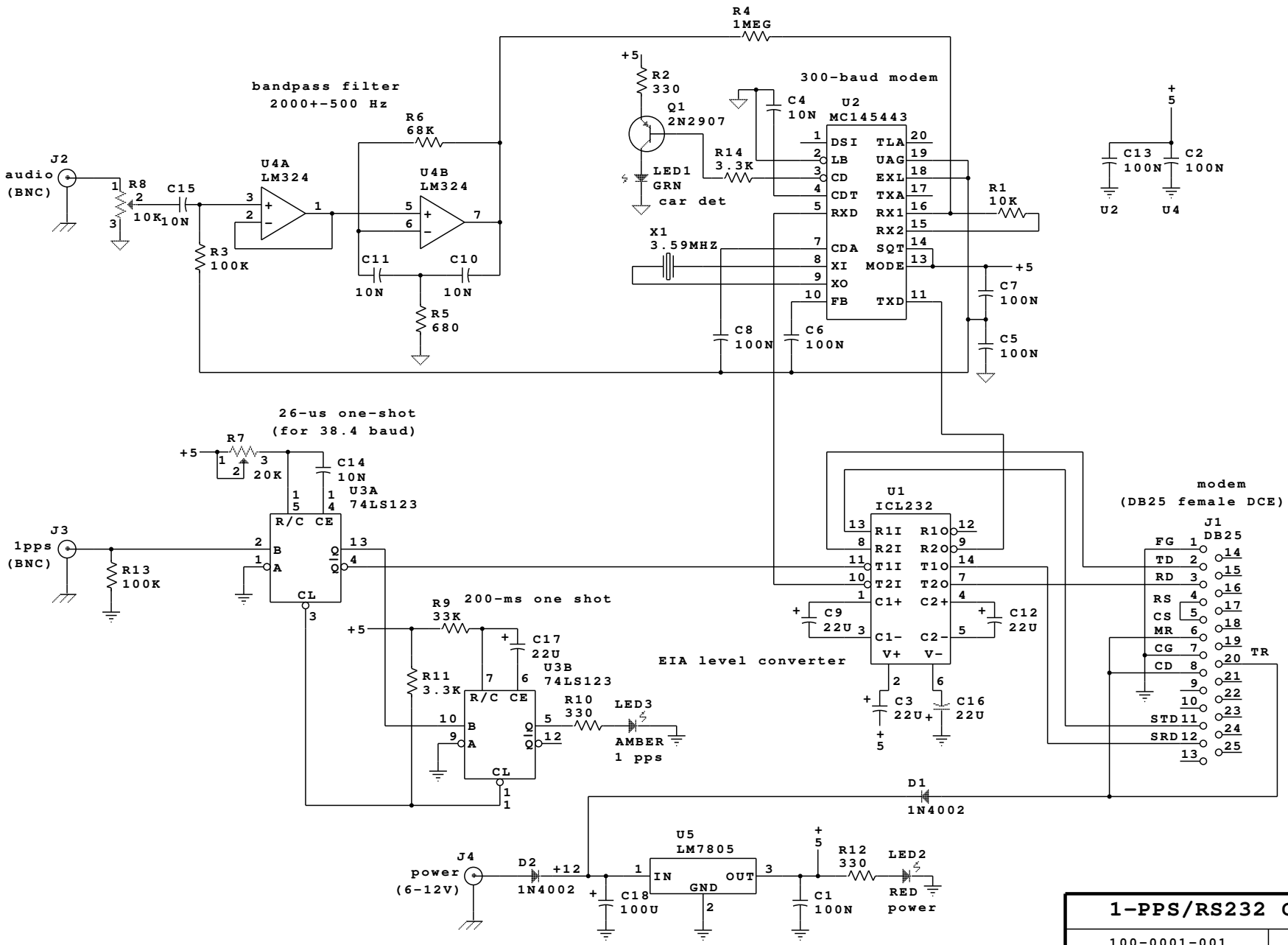

1-PPS/RS232 Converter	
100-0001-001	REV 1A
26 June 1992	SHEET 1 OF 2