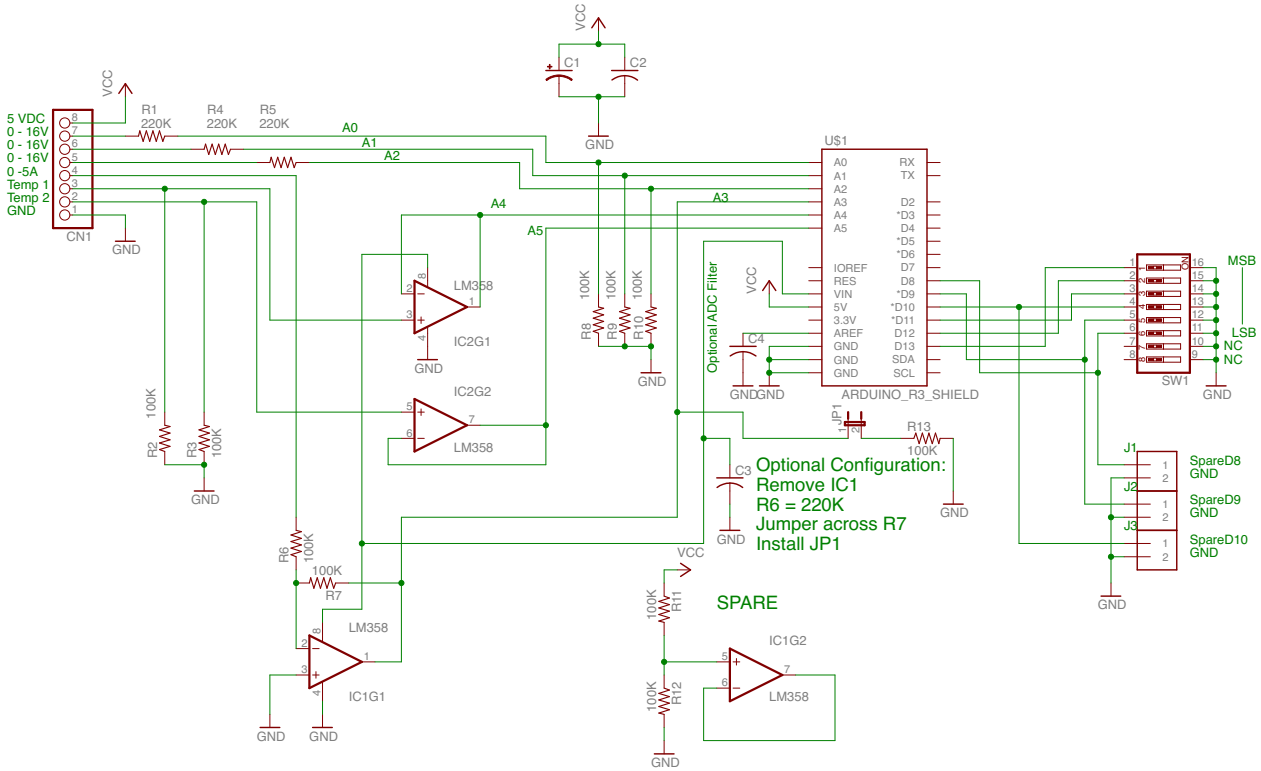

Reference Design is provided "AS IS" and "WITH ALL FAULTS". All warranties express or implied regarding this design, including but not limited to, any implied warranties of merchantibility or fitness for any particular application, are disclaimed by author.
The author may make changes to specification and product descriptions at any time without notice.
Use at your own risk.

FSQCall Telemetry Shield
For Arduino UNO R3

TITLE:	FSQCall Telemetry Shield
Document Number:	REV: 0.3
Date: 7/5/16 6:26 PM	Sheet: 1/1