Saab 9000

Service Manual

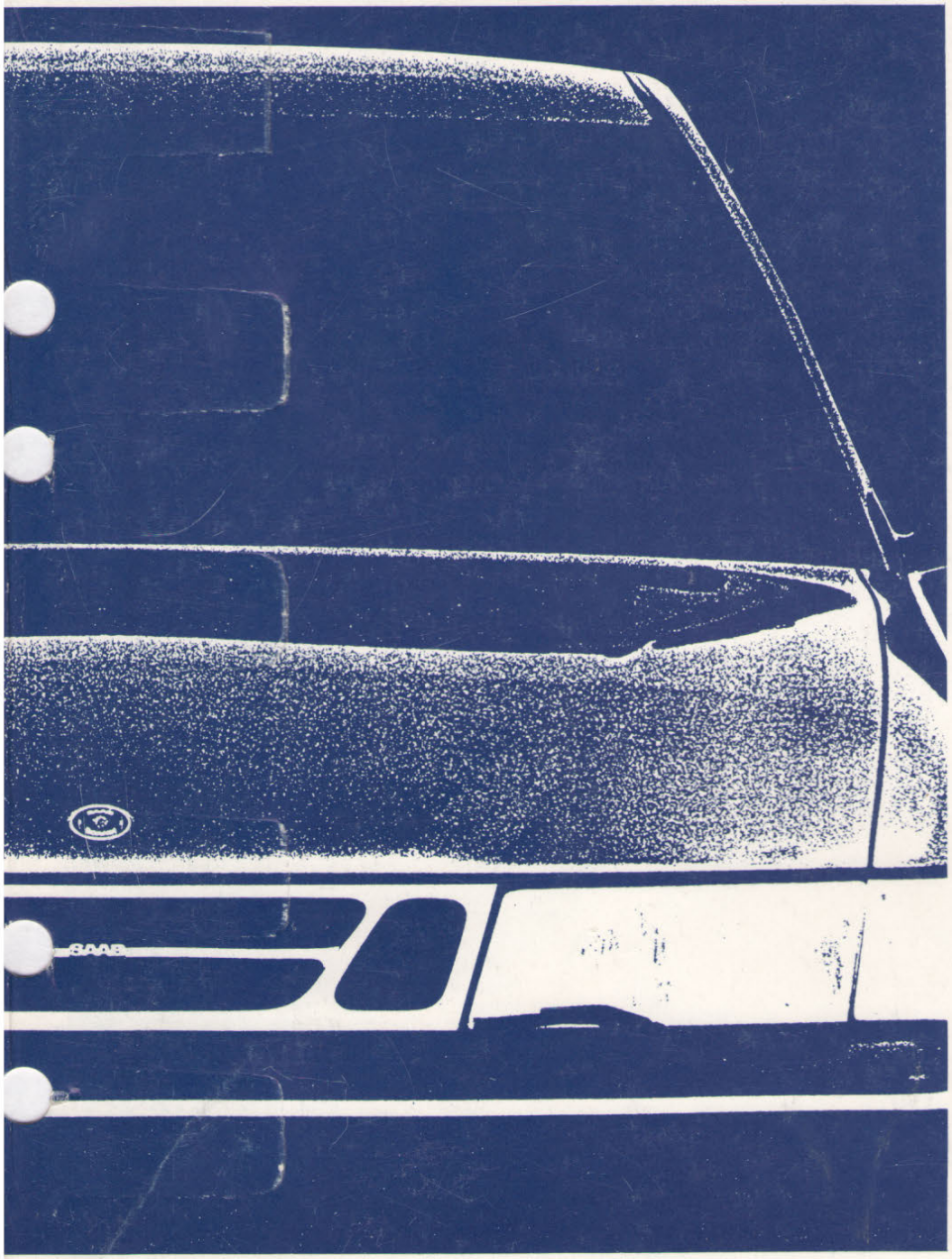

M 1985-93

ENG

2:3 LH Fuel injection system

jxh

Saab 9000

SERVICE MANUAL

2:3 LH Fuel injection system

M 1985–93

Foreword

This service manual supersedes:

- Service Manual 2:3 Fuel system, fuel injection engine M1985-1989-
- Service Information 240-1106
- The text dealing with the LH fuel system in 9000 M1988-91 "News" manuals

Contents subject to alteration without notice.

Saab Automobile AB

Technical data	1
Special tools	11
Technical description	15
Fault diagnosis	53
Adjustment/replacement of components	183
Connectors and grounding points	245
Wiring diagrams	269

RECYCLABLE PAPER

jxh

Saab 9000

SERVICE MANUAL

2:3 LH Fuel injection system

M 1985–93

Foreword

This service manual supersedes:

- Service Manual 2:3 Fuel system, fuel injection engine M1985-1989-
- Service Information 240-1106
- The text dealing with the LH fuel system in 9000 M1988-91 "News" manuals

Contents subject to alteration without notice.

Saab Automobile AB

Technical data	1
Special tools	11
Technical description	15
Fault diagnosis	53
Adjustment/replacement of components	183
Connectors and grounding points	245
Wiring diagrams	269

RECYCABLE PAPER

jxh

Warning, Important and Note

The headings "Warning", "Important" and "Note" occur from time to time in the Service Manual. They are used to draw the attention of the reader to information of special interest and seriousness. The importance of the information is indicated by the three different headings and the difference between them is explained below.

⚠ WARNING

Warns of the risk of material damage and grave injury to mechanics and the driver, as well as serious damage to the car.

Important

Points out the risk of minor damage to the car and also warns the mechanic of difficulties and time-wasting mistakes.

Note

Hints and tips on how the work can be done in a way that saves time and labour. This information is not supplied for reasons of safety.

Market codes

The codes refer to market specifications

AT	Austria	GB	Great Britain
AU	Australia	GR	Greece
BE	Belgium	IS	Iceland
CA	Canada	IT	Italy
CH	Switzerland	JP	Japan
DE	Germany	ME	Middle East
DK	Denmark	NL	Netherlands
ES	Spain	NO	Norway
EU	Europe	SE	Sweden
FE	Far East	US	USA
FI	Finland	UC	US California
FR	France		

©Saab Automobile AB 1995

Production: Service Support, Saab Automobile AB, Trollhättan, Sweden

jxh

Technical data

Coolant temperature sensor 1
Auxiliary air valve M1985 1
IAC valve M1986- 2
Full-load enrichment 2
Fuel pump 3
Fuel tank 3
CO idling 3
Pulse ratio, closed loop LH 2.2 4
Mass air flow sensor 4
Oxygen sensor 5
Injectors 5
Summary of LH components 6
Fuel pressure regulator 9
EVAP canister purge valve 9
Pressure switch 9
Tightening torques 10

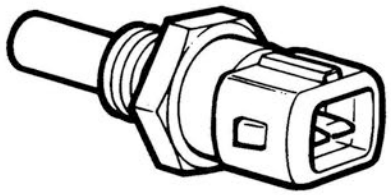

Coolant temperature sensor

Designation		9357021 (Bosch 0280130026) or 8788200 (Bosch 0280130032) (TCS cars)
Resistance at 0°C (32°F)	Ohms	5800 ± 10 %
20°C (68°F)	Ohms	2600 ± 7 %
80°C (176°F)	Ohms	320 ± 5 %

Note: Temperature sensor 87 88 200 contains two parallel circuits. The above figures refer to each circuit.

Auxiliary air valve M1985

Resistance at 20°C (68°F)	Ohms	40-60

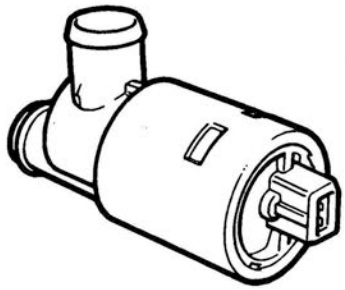

Idle air control valve (IAC) M1986-

Resistance at 20°C (68°F), LH 2.2	Ohms	20 ± 5 (pins 2-1 and 2-3)
LH 2.4, LH 2.4.1	Ohms	7 ± 5 (pins 1-2)
LH 2.4.2	Ohms	12 ± 3 (pins 2-1 and 2-3)

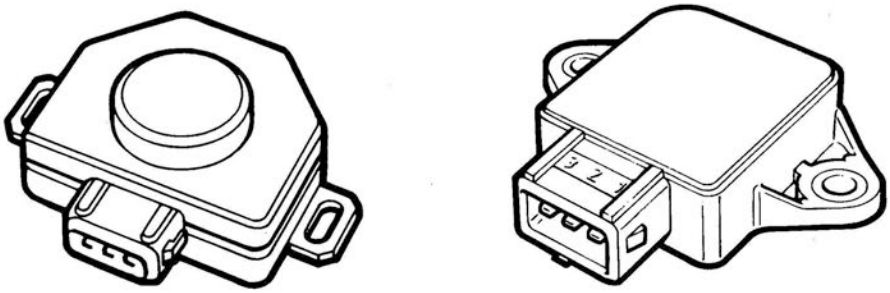

Full-load enrichment

Throttle position switch LH 2.2, 2.4, 2.4.1 (throttle valve angle when switch is closed)	degrees (°)	approx. 72
CO content during simulated full-load enrichment (not cat.)	%	4-6 (increases 2-4 %)
Throttle position sensor LH 2.4.2.	V	0.25 (closed throttle position)
Ignition on, voltage across pins 2 and 3	V	4.0 (wide open throttle)

Fuel pump

Capacity	cm^3/30 s cm^3/30 s	min. 900 (Bosch) min. 700 (Walbro)

Fuel tank

Total capacity, model years 1985-1989	litres (qts)	68 (71)
model years 1990, 1992–	litres (qts)	66 (69)
model year 1991	litres (qts)	62 (65)
Fuel remaining when low fuel warning lamp lights up	litres (qts)	approx. 7 (7.4)

CO idling, idling speed 850 rpm (not cat.)

Engine	Model year	CO %
B202 Turbo	1985-	1.3 ± 0.3
B202i	1986-	1.0 ± 0.5
B234i	1991-	1.0 ± 0.5

Pulse ratio, closed loop LH 2.2

Idling speed 850 ± 50 rpm

Engine	Model year	Pulse ratio	Remarks
B202	1985-1988	50/50	Readings taken with ISAT scan tool and cables or with pulse ratio meter 83 93 597

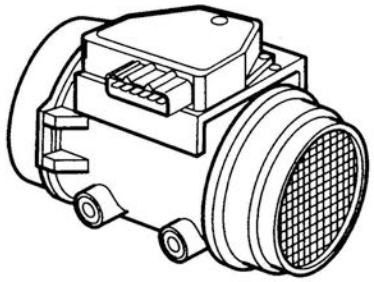

Mass air flow sensor

Voltage is proportional to engine load. The greater the load, the higher the voltage.

Important

A mass air flow sensor of plastic must never be replaced by a mass air flow sensor of aluminium, or vice versa.

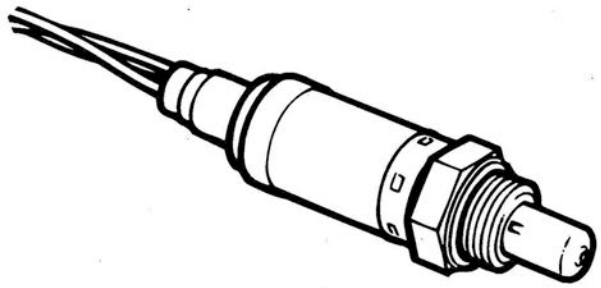

Oxygen sensor

Signal voltage 0-1 V when system in operation. Resistance, preheating 4 ± 2 ohms (at 20°C).

Injectors

Flow capacity

Fuel pressure regulator, opening pressure (bar)	min. (ml/30 s)
2.5 (Turbo 1985-86)	104
2.8 (Turbo 1987-)	110
3.0 (B202i)	90
3.0 (B234i	125
3.0 Turbo (B234)	145

Check that flow capacity is the same for all injectors.

The specified flow rates are valid at room temperature (20 ± 1°C).

Injector opening duration is proportional to engine load. The greater the load, the longer the opening duration.

Summary of LH components

To facilitate the handling of LH control modules, we have prepared a summary of all existing units.

The summary consists of two tables: Table A for cars **with** a catalytic converter and Table B for those **without**.

Table A. Specification, LH fuel injection system Cars equipped with a catalytic converter

Version	Model year	Engine	LH	Fuel pressure regulator			Mass air flow sensor		Injector		Control module	
				Bar	Bosch	SAAB	Bosch	SAAB	Bosch	SAAB	Bosch	SAAB
9000iM, iA	86-87	B202	2.2	3.0	-258	7580160	1)-009	9390428	-711	7560162	-532	9389768
-"-	88	-"-	2.4	-"-	-256	7564123	2)-011	7538663	-"-	-"-	-552	7538671
-"-	89	-"-	-"-	-"-	-706	7486921	-"-	-"-	-"-	-"-	-565	7487143
-"-	90	-"-	-"-	-"-	-"-	-"-	-"-	-"-	-"-	-"-	-584	9119470
-"-C)	-"-	-"-	-"-	-"-	-"-	-"-	-"-	-"-	-"-	-"-	-581	9119496
-"-	-"-	B234	2.4.1	-"-	-"-	-"-	3)-019	9113838	-002	9113721	-579	9113804
-"-	91	-"-	2.4.2	-"-	-"-	-"-	-"-	-"-	-"-	-"-	-905	7872237
-"-C)	-"-	-"-	-"-	-"-	-"-	-"-	-"-	-"-	-"-	-"-	-905	7872237
-"-	-"-	B202	2.4	-"-	-"-	-"-	2)-011	7538663	-711	7560162	-584	9119470
9000 LMA)	86	B202	2.2	2.5	-257	7580152	1)-005	9375643	-712	7560170	-531	9389750
-"-A)	87	-"-	-"-	-"-	-"-	-"-	-"-	-"-	-"-	-"-	-"-	-"-
9000 LA B)	-"-	-"-	-"-	-"-	-"-	-"-	-"-	-"-	-"-	-"-	-539	9391178
9000 LMB),LA	88	-"-	-"-	-"-	-255	7564131	-"-	-"-	-"-	-"-	-"-	-"-
-"-	89	-"-	2.4	-"-	-704	7486905	2)-013	7538655	-"-	-"-	-566	8978355
-"-	90	-"-	-"-	-"-	-"-	-"-	-"-	-"-	-"-	-"-	-586	9119488
-"-C)	-"-	-"-	-"-	-"-	-"-	-"-	-"-	-"-	-"-	-"-	-583	8787079
9000 LM, LA	91	-"-	-"-	-"-	-"-	-"-	-"-	-"-	-"-	-"-	-940	9126194
-"-	-"-	B234	2.4.2	3.0	-524	9131061	8)-012	9113846	-009	8857153	-908	8857187
9000 LM13)	-"-	-"-	-"-	-"-	-"-	-"-	-"-	-"-	-"-	-"-	-910	7872260
-"-13)	-"-	B202	2.4	2.5	-704	7486905	-013	7538655	-712	7560170	-941	9126202
9000iM, iA	92	B202	2.4	3.0	-706	7486921	-011	7538663	-711	7560162	-584	9119470
-"-	-"-	B234	2.4.2	-"-	-"-	-"-	-019	9113838	-002	9113721	-905	7872237
9000 LM, LA	-"-	B202	2.4	2.5	-704	7486905	-013	7538655	-712	7560170	-940	9126194
9000 LM13)	-"-	-"-	-"-	-"-	-"-	-"-	-"-	-"-	-"-	-"-	-941	9126202
9000 LM, LA	-"-	B234	2.4.2	3.0	-524	9131061	-012	9113846	-009	8857153	-908	8857187
-"-13) man+aut TCS	-"-	-"-	-"-	-"-	-"-	-"-	-"-	-"-	-"-	-"-	-910	7872260
9000iM, iA	93	B202	2.4	-"-	-706	7486921	-011	7538663	-711	7560162	-584	9119470
9000iM, iA	93	B234	2.4.2	-"-	-706	7486921	-019	9113838	-002	9113721	-905	7872237
9000iM, iA	93	-"- *)	-"-	-"-	-706	7486921	-019	9113838	-002	9113721	-960	4300224
9000L (IT 137kW)	90-93	B202	2.4	-"-	-706	7486921	-013	7538655	-712	7560170	-940	9126194
9000L	93	B202	-"-	2.5	-704	7486905	-013	7538655	-712	7560170	-940	9126194
9000L13)	93	B202	-"-	-"-	-704	7486905	-013	7538655	-712	7560170	-941	9126202

*) *Catalytic converter repositioned more forward US, SE*

1)HLM 1, alum. 100°

2)HLM 2/4.7, plastic, 120°

3)HLM 2/4.7, plastic, 155°

8)HLM 2/6.4, plastic, 155°

13)Traction Control

14)Traction Control

A)Air filter in engine bay

B)Air filter in wheel housing

C)EGR (US/Cal)

D)Traction Control

L = Turbo engine

i = fuel injection engine

M = manual gearbox

A = automatic transmission

Table B. Specification, LH fuel injection system
Cars not equipped with a catalytic converter

Version	Model year	Engine	LH	Fuel pressure regulator			Mass air flow sensor		Injector		Control module	
				Bar	Bosch	SAAB	Bosch	SAAB	Bosch	SAAB	Bosch	SAAB
9000iM, iA	86	B202	2.2	3.0	-258	7580160	1)-009	9390428	-711	7560162	-530	9388513
-"-	87	-"-	-"-	-"-	-"-	-"-	-"-	-"-	-"-	-"-	-"-	-"-
-"-	88	-"-	-"-	-"-	-"-	-"-	2)	7591183	-"-	-"-	-553	7591498
9000 iM	89-90	-"-	-"-	-"-	-706	7486921	-"-	-"-	-"-	-"-	-574	9114711
9000 iA	-"-	-"-	-"-	-"-	-"-	-"-	-"-	-"-	-"-	-"-	-567	7487127
9000 iM, iA	91	-"-	2.4.2	-"-	-"-	-"-	3)-022	7872385	-"-	-"-	-903	7872203
9000 iA	-"-	B234	-"-	-"-	-"-	-"-	-"-	-"-	-002	9113721	-907	7872229
9000iM, iA	92	B202	2.4.2	3.0	-706	7486921	-022	7872385	-711	7560162	-903	7872203
9000iA, iM	-"-	B234	-"-	-"-	-"-	-"-	-"-	-"-	-002	9113721	-907	7872229
9000 LM	85	B202	2.2	2.5	-225	7518681	1)-005	9375643	-712	7560170	-519	9388471
-"-	86	-"-	-"-	-"-	-257	7580152	-"-	-"-	-"-	-"-	-534	9389545
-"-	87	-"-	-"-	2.8	-265	7568058	-"-	-"-	-"-	-"-	-548	9393463
9000 LA	-"-	-"-	-"-	-"-	-"-	-"-	-"-	-"-	-"-	-"-	-540	9391186
9000 LM, LA	88	-"-	-"-	-"-	-"-	-"-	-"-	-"-	-"-	-"-	-"-	-"-
9000 LM	89	-"-	-"-	-"-	-705	7486913	2)-017	8978280	-"-	-"-	-575	9114729
9000 LA	-"-	-"-	-"-	-"-	-"-	-"-	-"-	-"-	-"-	-"-	-555	8975294
9000 LM	90	-"-	-"-	-"-	-"-	-"-	-"-	-"-	-"-	-"-	-587	9119520
9000 LA	-"-	-"-	-"-	-"-	-"-	-"-	-"-	-"-	-"-	-"-	-588	9119538
9000 LM, LA	91	-"-	2.4.2	-"-	-"-	-"-	3)-018	7872393	-"-	-"-	-904	7872211
9000 LM, LA	92	B202	-"-	2.8	-705	7486913	-018	7872393	-712	7560170	-904	7872211
9000 LM, LA	93	B202	-"-	2.8	-705	7486913	-018	7872393	-712	7560170	-904	7872211
9000iA, iM	93	B202	-"-	3.0	-706	7486921	-022	7872385	-711	7560162	-903	7872203
9000iA, iM	93	B234	-"-	3.0	-706	7486921	-022	7872385	-002	9113721	-907	7872229

1)HLM 1, alum. 100°

2)HLM 2/4.7, plastic, 120°

3)HLM 2/4.7, plastic, 155°

D)Traction Control

L = Turbo engine

i = fuel injection engine

M = manual gearbox

A = automatic transmission

Table C. Specification, LH components

Component	LH system				Car version	Bosch	Saab
	2.2	2.4	2.4.1	2.4.2			
Temperature sensor	x				9000 Turbo cat. aut M87-88	-055	7563562
Temperature sensor		x			TCS	-032	8788200
Temperature sensor	x	x	x	x	Others	-026	9357021
Oxygen sensor	x	x			9000i M87-M89	-009	7525603
Oxygen sensor		x	x	x	9000i M90-M91, 9000i M86, 9000 Turbo M85-M91	-028	9392762
Oxygen sensor	x		x		M92–	-245	9132564
Oxygen sensor	x	x	x	x	9000 Turbo, Brazil -M91	-095	9129743
Oxygen sensor	x	x	x	x	9000 Turbo, Brazil and ME M92	-258	4164323
Knock sensor	x				All	-001	9358037
Knock sensor[1)]	x	x	x	x	All	-006	7568801
Knock sensor	x	x	x	x	Saab DI electronic ignition	-	7585755
Throttle position switch	x	x	x		All except 2.4.2	-300	7501612
Throttle position sensor				x	2.4.2 M91-	-001	8857195
IAC valve	x				M86–	-502	7516792
IAC valve		x	x		2.4 M88-, 2.4.1 M90	-516	7586019
IAC valve				x	B234 Turbo M91-	-526	8787996
IAC valve				x	Other 2.4.2 M91-	-505	8857179
Auxiliary air valve	x				M1985	-107	8357832
Cold-starting valve		x			9000i cat.	-432	7486129
Evaporative emission canister	x				Cat. cars. ME market	-	7532054
Evaporative emission canister excl. purge valve		x	x	x	All	-	7539216
EVAP canister purge valve		x	x	x	All	-157	7539257
Charge air bypass valve	x	x	x	x	All Turbo	-103	9390022

[1)]From engine serial No. G122319, inclusive

Fuel pressure regulator, test readings

	Turbo -1986	Turbo 1987-	B202i 1986- B234 1990-
Nominal system pressure, bar (psi)	2.5 (36)	2.8 (40)	3.0 (43)

Tolerance range:

2.5 + 0.25/-0.15 bar (36 + 3.6/-2.3 psi)

2.8 + 0.25/-0.15 bar (40 + 3.6/-2.3 psi)

3.0 + 0.25/-0.15 bar (43 + 3.6/-2.3 psi)

Permissible tolerance when checking with garage equipment and due allowance made for temperature, grade of fuel, instrument error and calibration: +5%.

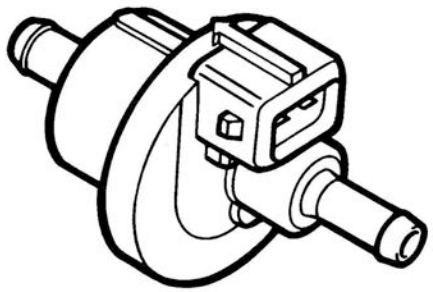

C248W-6637

EVAP canister purge valve

Type		Bosch TEV 1
Characteristic feature		Open without current
Resistance at 20°C (68°F)	ohms	45 ± 5 %
Control voltage	V	13

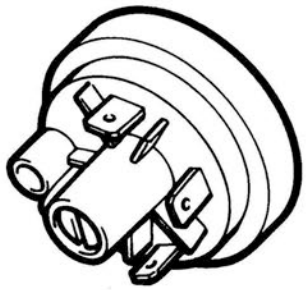

C248W-6638

Pressure switch

Tripping pressure	bar (psi)	1.10 ± 0.05 (not cat.) (-M1990) 0.95 ± 0.03 (cat.) (-M1990)

Tightening torques

	Torque (Nm)	Torque (lbf ft)	Size
Intake manifold	22	16	M8
Knock sensor	20	15	
Ignition discharge module	11	8	M6
Spark plugs	28	20.7	
Other bolts	5	3.7	M5
	10	7.4	M6
	20	15	M8
	40	30	M10

Special tools

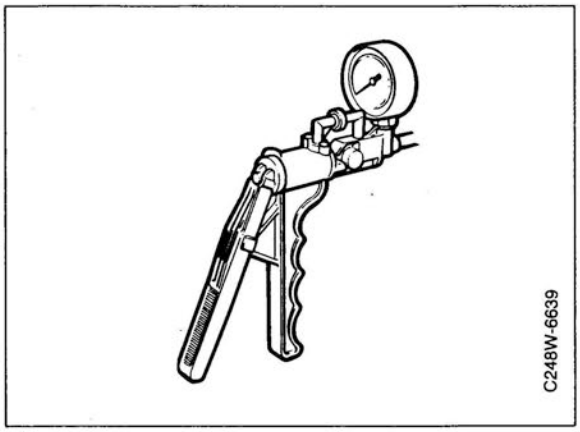

30 14 883 Pressure/vacuum pump

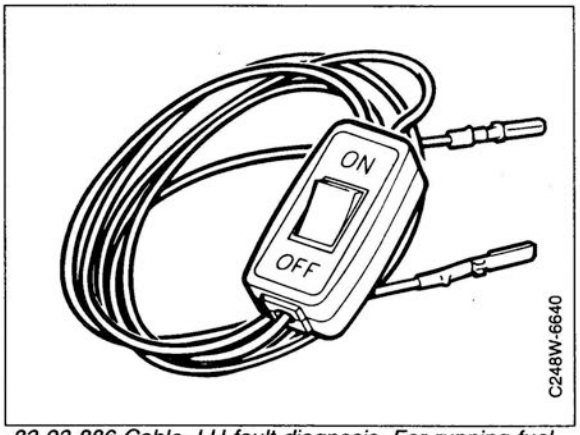

83 93 886 Cable, LH fault diagnosis. For running fuel pump.

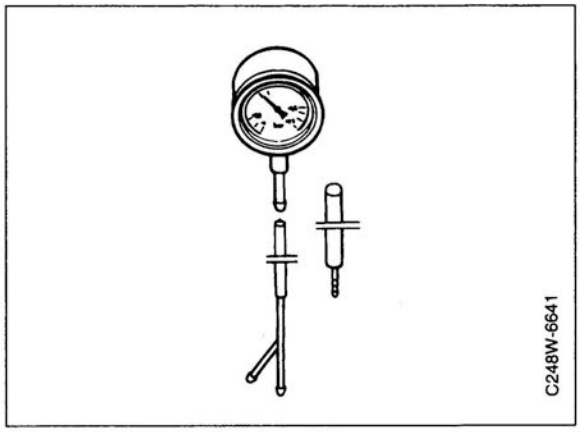

83 93 514 Boost pressure gauge

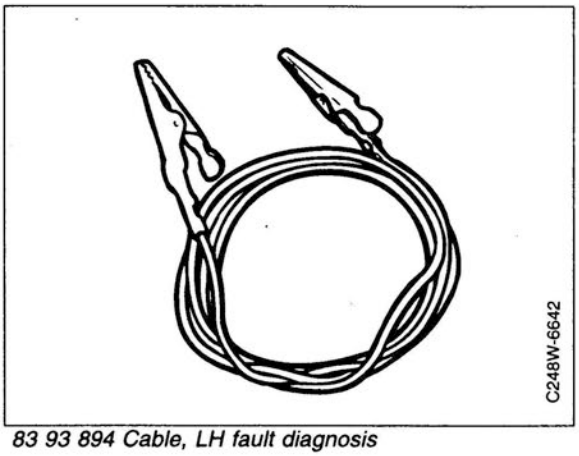

83 93 894 Cable, LH fault diagnosis

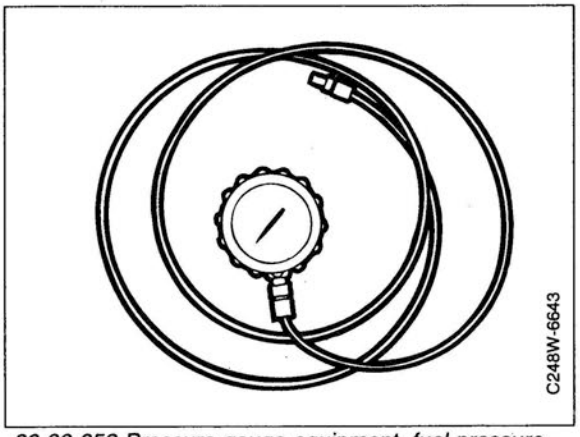

83 93 852 Pressure gauge equipment, fuel pressure

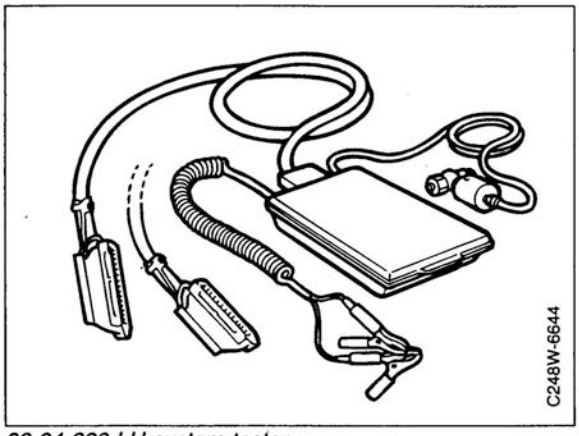

83 94 223 LH system tester

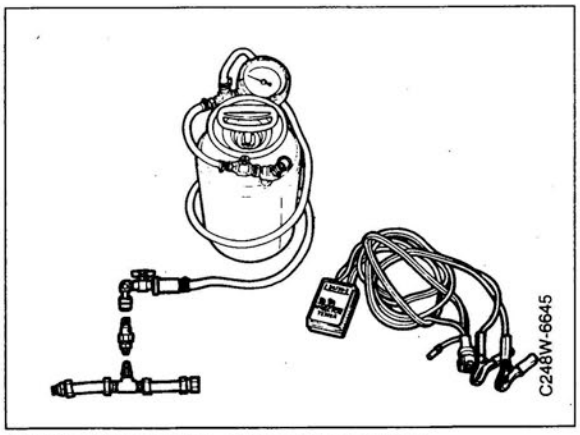

83 94 264 Cleaning equipment, injectors.

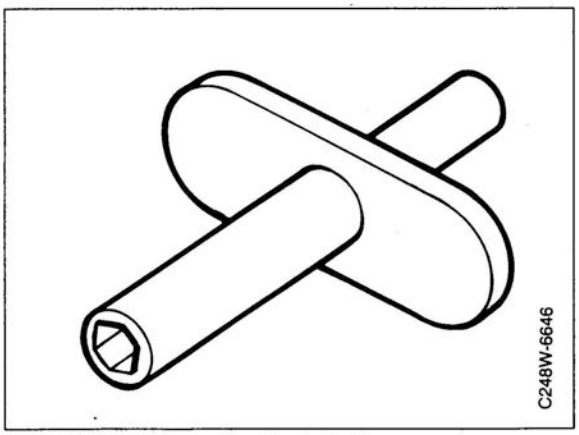

83 94 322 Spanner, throttle butterfly

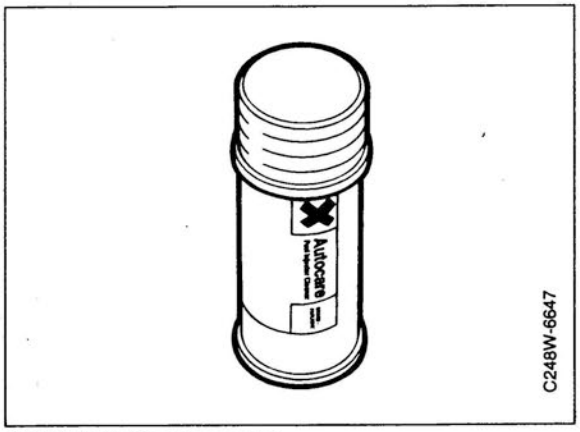

83 94 272 Cleaning agent

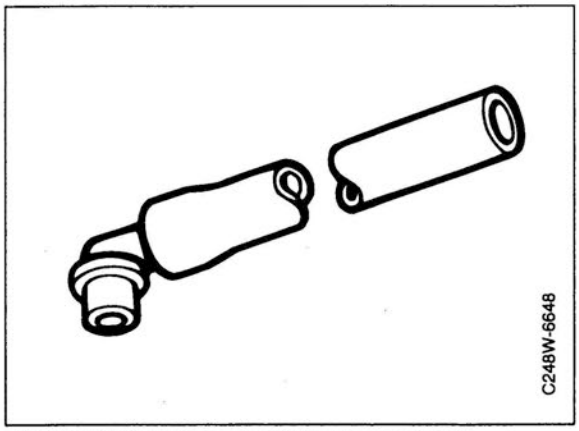

83 94 405 Test hose, fuel flow measurement

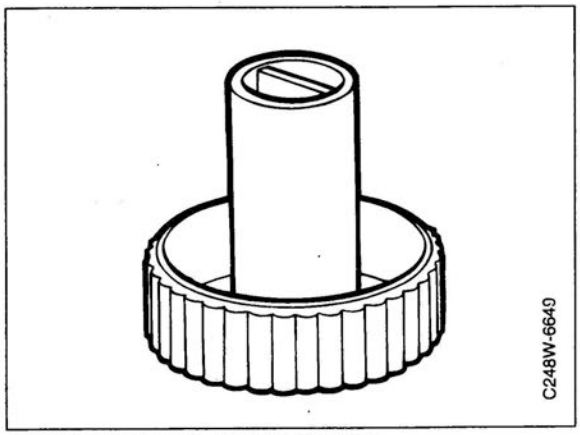

83 94 314 Wrench, B202 CO setting

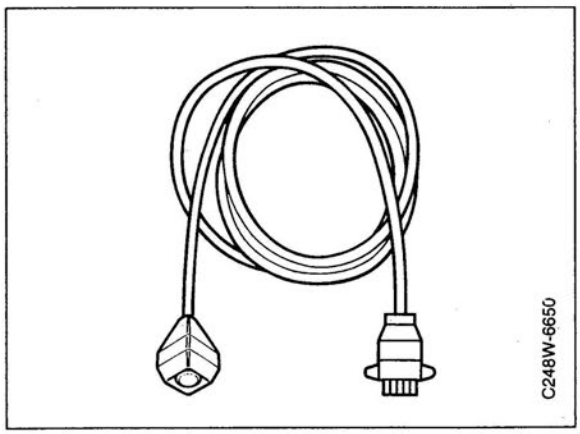

83 94 504 Cable for lamp flash codes. 10 pole, LH 2.4

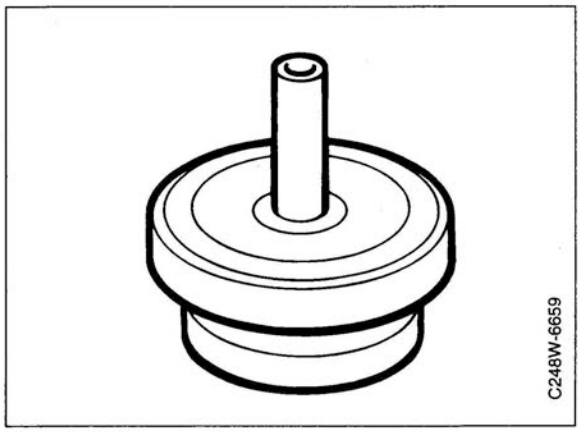

83 94 587 Plug, turbo hose

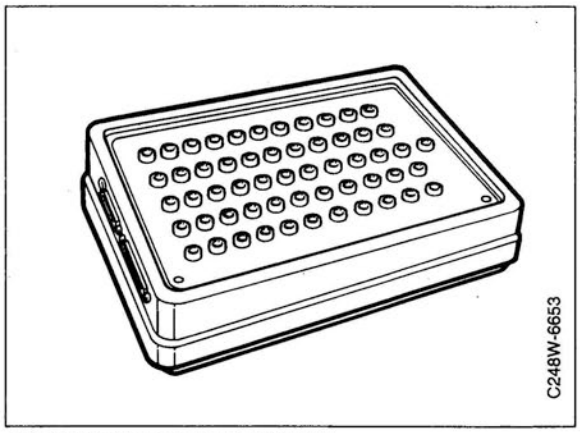

86 11 006 Breakout Box (BOB)

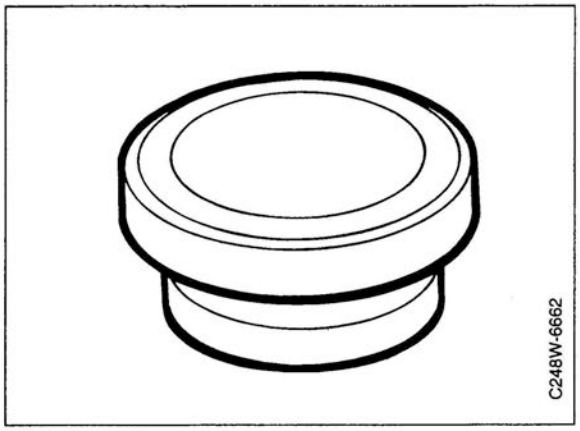

83 94 595 Plug, turbo hose

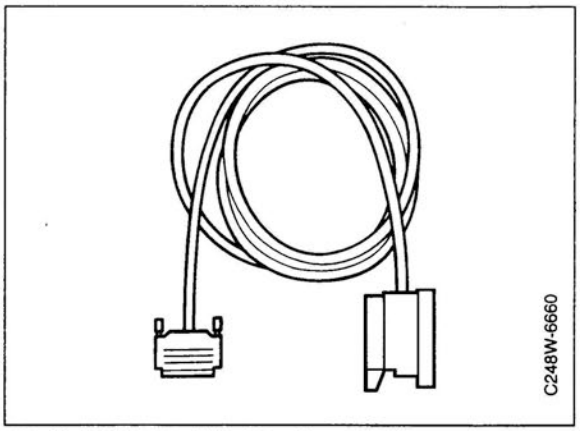

86 11 147 Test cable, 25 pole

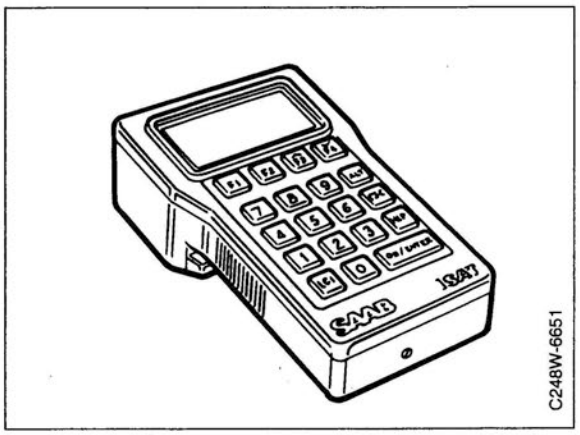

86 10 834 ISAT scan tool

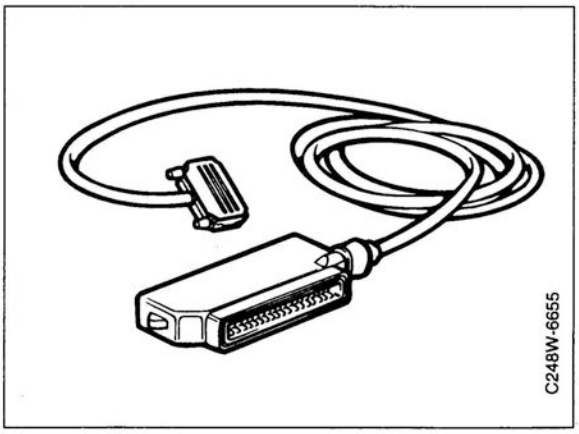

86 11 154 Test cable, 35 pole

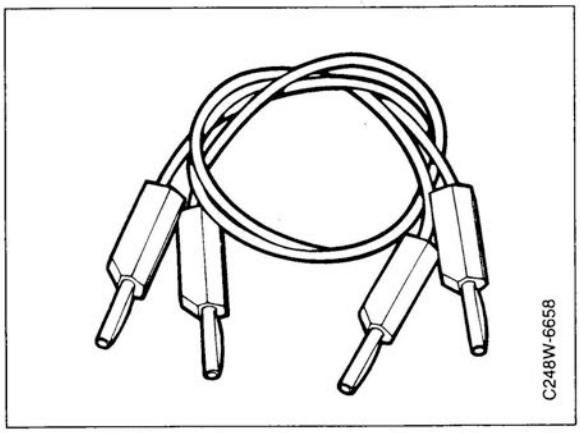

86 11 345 Diagnostics cable (jumper lead with switch)

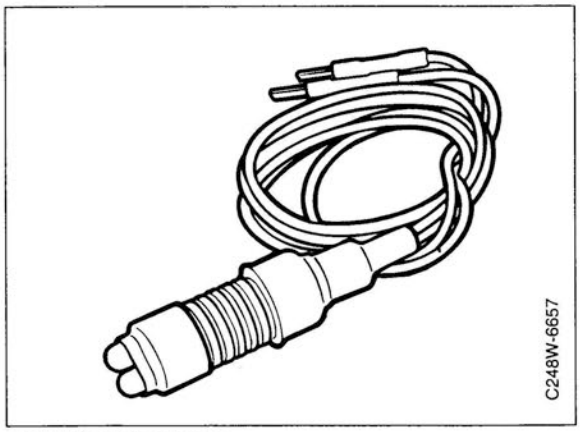

87 11 857 Test lamp

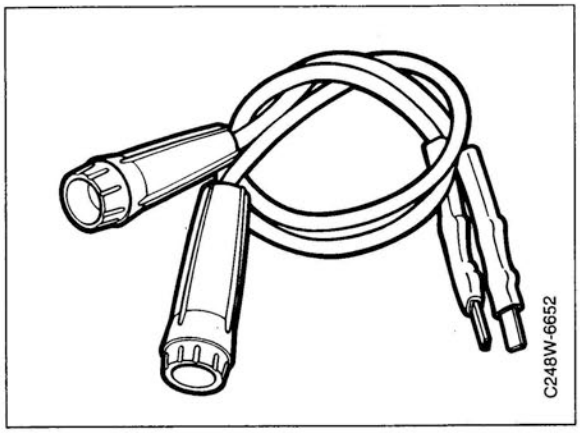

86 11 352 Test cable, male terminals

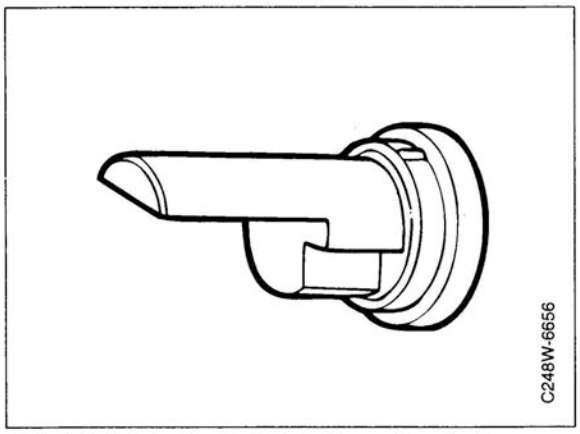

87 91 980 Adjusting tool, kick-down wire, 4-cyl.

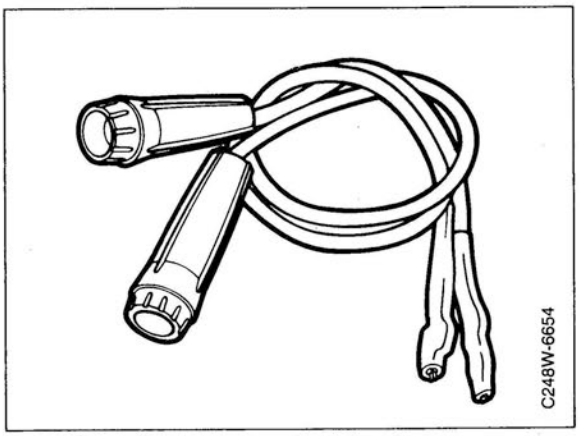

86 11 410 Test cable, female terminals

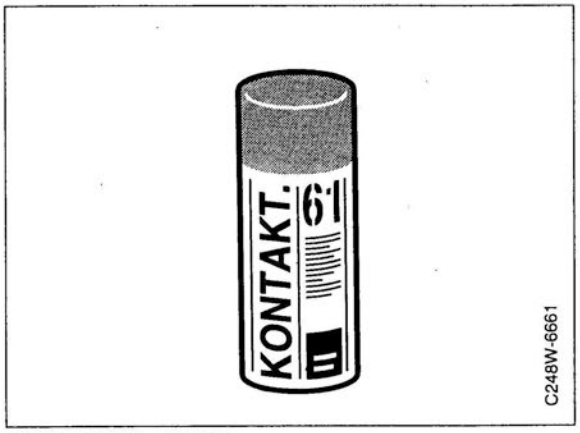

30 04 520 Kontakt 61

Technical description

LH system, general 16
LH 2.2. 18
LH 2.4. 19
Identification of LH systems 20
Location of components 21
Sensors 22
Principle of operation, all systems 23
Mass air flow sensor 29
General 29
Description 30
Burn-off 32
Control module 33
Temperature sensor 35
Oxygen sensor 36
Throttle position switch 37
Throttle position sensor 38
Auxiliary air valve 39
Idle air control valve, LH 2.2 (IAC valve) 40
Idle air control valve, LH 2.4, 2.4.1 and 2.4.2 (IAC-valve) 41
EVAP canister purge valve 43
Cold starting valve 9000i, cat. (LH 2.4) 44
Engine starting 45
Warming up the engine 46
Safety factors 47
Limp Home driving conditions 48
PRE-IGNition enrichment 49
Fuel shut-off 50
Electronic EGR system 51

jxh

LH system, general

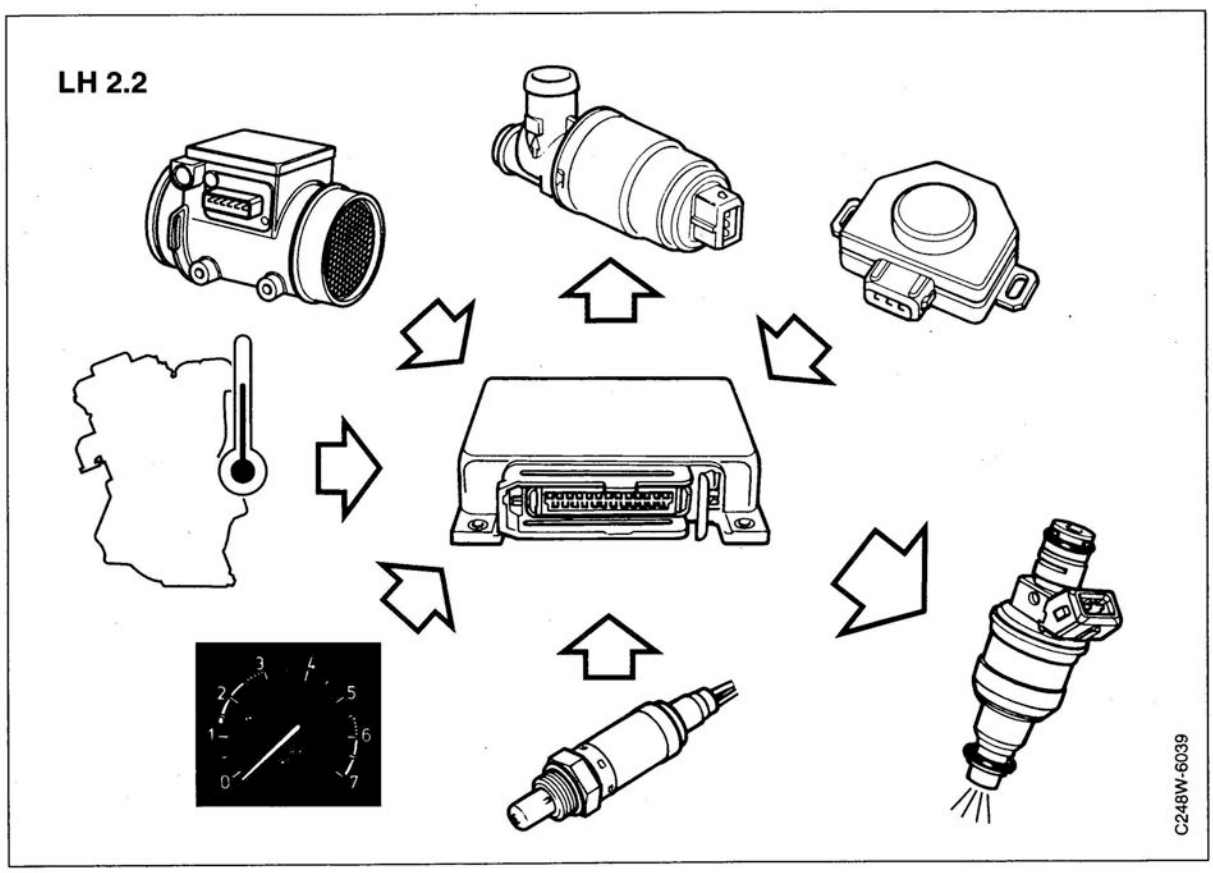

The Bosch LH-Jetronic (Luftmassenmesser Hitzdraht) air mass meter with hot filament sensor (mass air flow sensor) is a fuel injection system in which the best properties of different fuel injection systems are combined with **mass air flow sensing**, i.e. the density of the air is taken into account.

The LH-Jetronic system measures the **air mass** used by the engine, taking the composition of the air (temperature, pressure and humidity) into account as it flows through the mass air flow sensor.

This system gives an exact measure of the amount of oxygen supplied to the engine by the air mass and determines the amount of fuel needed for efficient combustion.

The system has the following advantages:

- Compensates for different temperature conditions.
- Adjusts the amount of fuel to the amount of oxygen in the air when driving at high altitudes.
- Few components.
- Low weight.
- Few moving parts.
- Good means of adapting the amount of fuel to actual needs (warm-up phase/acceleration phase).

LH-systems, general (contd.)

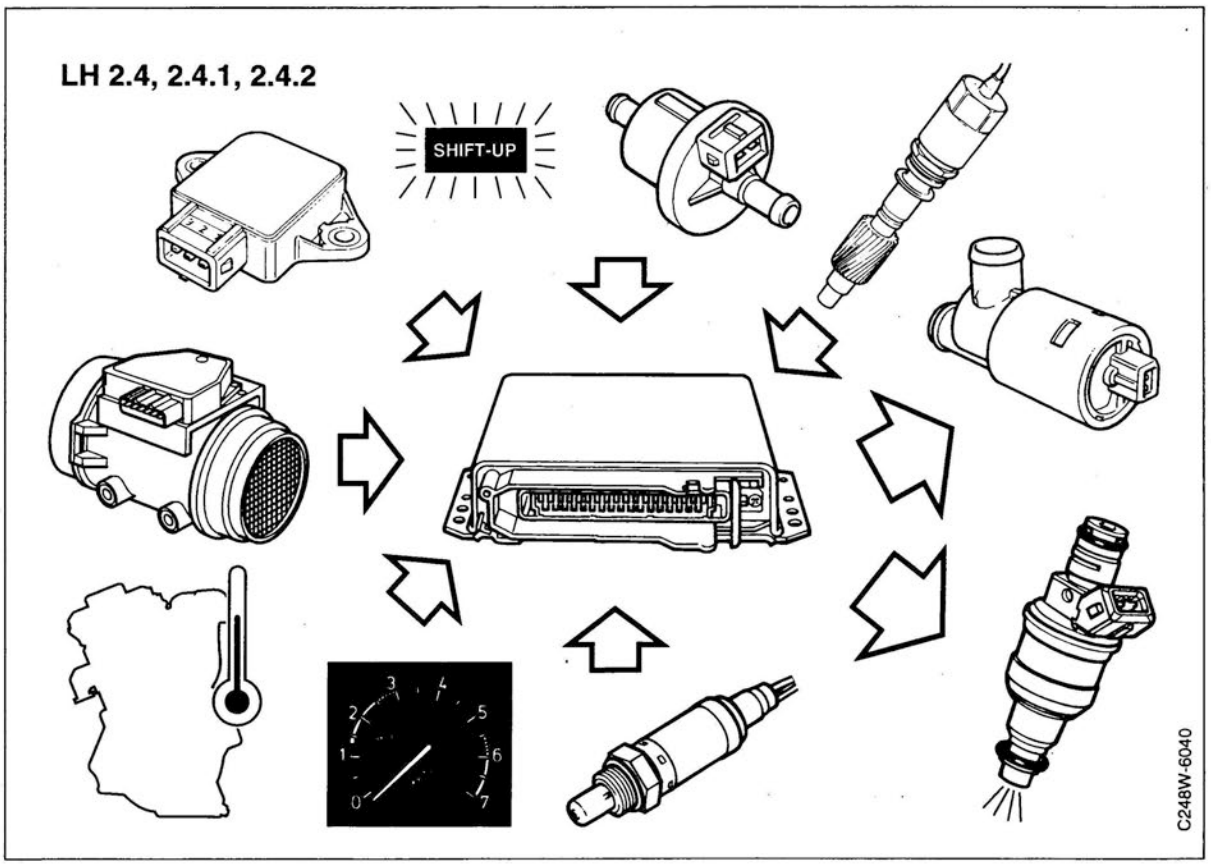

There are four versions of the LH-system: LH 2.2, 2.4, 2.4.1 and 2.4.2. The LH 2.2 and 2.4.2 versions are fitted to cars both with and without a catalytic converter while the LH 2.4 and 2.4.1 versions are fitted only to cars with a catalytic converter.

The most important differences between the different systems are that:

- the LH 2.4, which is a further development of the LH 2.2, has a control module with expanded memory capacity. This provides diagnostic capabilities.
- the diagnostic capability of the LH 2.4.1 is additionally expanded. The accuracy of the mass air flow sensor is also higher. Time delay of AC engagement is now obtained from the control module instead of from a relay as it was earlier.
- the fault diagnosis capability of the LH 2.4.2 system is expanded through design modifications to the control module. The throttle position switch has been replaced by a potentiometer. Idle speed control has been changed through an idle air control valve of new design.

LH 2.2

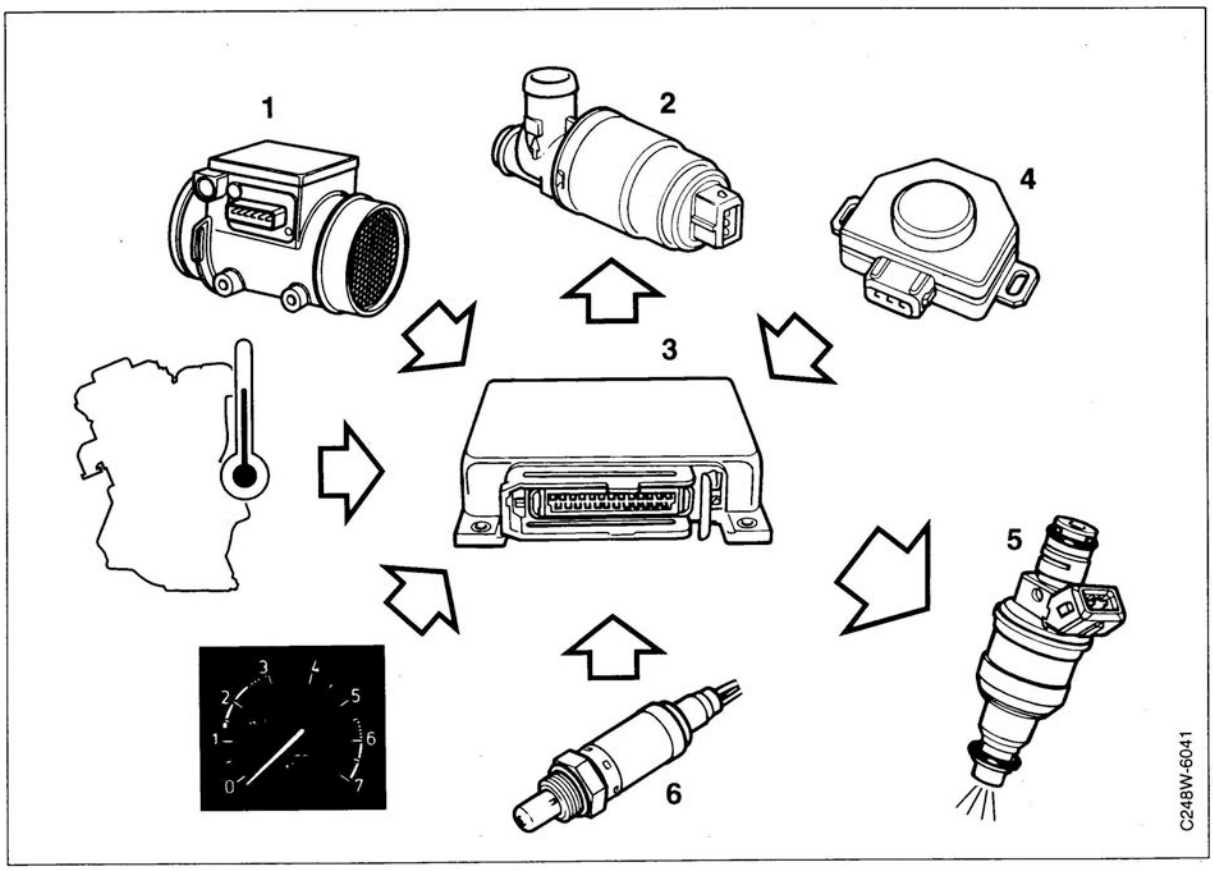

1 Mass air flow sensor
2 IAC valve
3 Control module
4 Throttle position switch
5 Injector
6 Oxygen sensor

General

The amount of fuel injected into the engine depends on the amount of air passing through the mass air flow sensor.

The amount of air that is to pass through the mass air flow sensor is determined by the position of the accelerator (engine load) and the speed of the engine. The amount of air is measured by the mass air flow sensor. On the basis of this information the control module calculates how much petrol the injectors should squirt into the engine.

The oxygen sensor, fitted to cars equipped with a catalytic converter, measures the oxygen content of the exhaust gases. This indicates whether too much or too little fuel is injected into the engine. The control module adjusts the amount of fuel on receiving a signal from the oxygen sensor.

The control module ensures that the opening duration of the injectors is correct for each individual engine load condition.

LH 2.4, 2.4.1 and 2.4.2

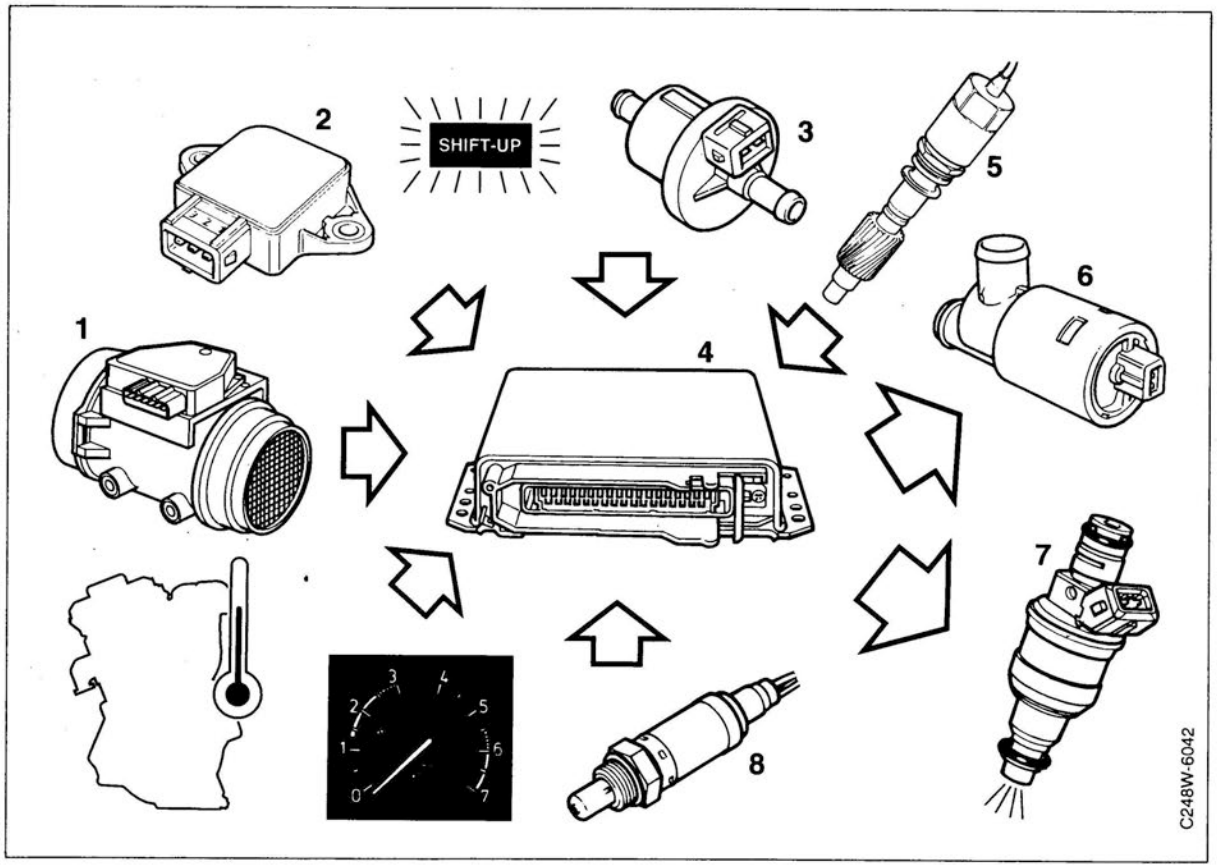

1 Mass air flow sensor
2 Throttle position sensor
3 EVAP canister purge valve
4 Control module
5 Speed sensor
6 IAC valve
7 Injector
8 Oxygen sensor

General

The amount of fuel injected into the engine depends on the amount of air passing through the mass air flow sensor.

The amount of air that is to pass through the mass air flow sensor is determined by the position of the accelerator (engine load) and the speed of the engine. The amount of air is measured by the mass air flow sensor. On the basis of this information the control module calculates how much petrol the injectors should squirt into the engine.

The oxygen sensor, fitted to cars equipped with a catalytic converter, measures the oxygen content of the exhaust gases. This indicates whether too much or too little fuel is injected into the engine. The control module adjusts the amount of fuel on receiving a signal from the oxygen sensor.

The control module ensures that the opening duration of the injectors is correct for each individual engine load condition.

The control module also controls the EVAP canister purge valve. In addition, signals from the speedometer are used to control the "SHIFT-UP" function.

Identification of LH systems

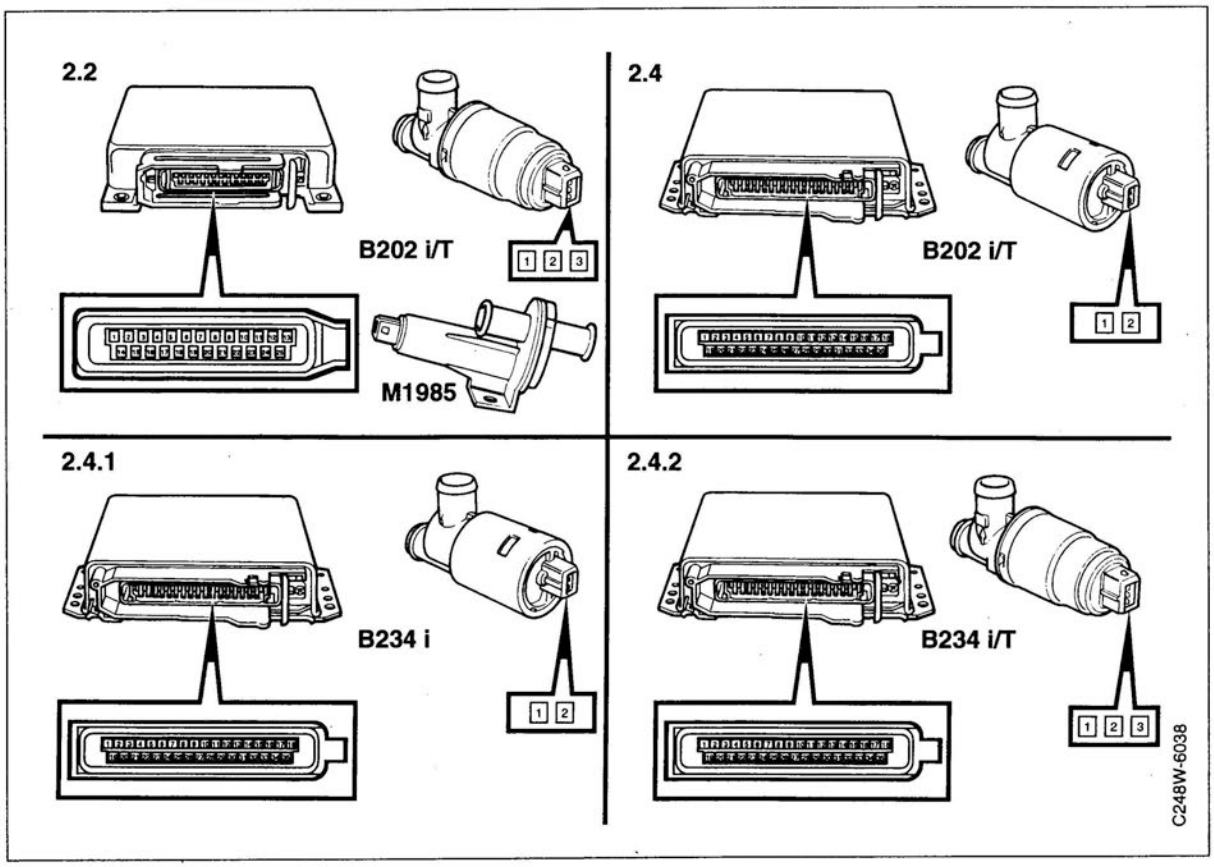

In connection with all work carried out on LH systems it is extremely important to be quite clear about which LH system is fitted to the car in question.

For easier identification of the LH systems, see the illustrations above and the table below.

LH system	Engine	LH control module	IAC valve	Remarks
2.2	2.0 injection/Turbo	25 pins	3 pins	Auxiliary air valve, 2 pins (1985)
2.4	2.0 injection/Turbo	35 pins	2 pins	
2.4.1	2.3 injection	35 pins	2 pins	
2.4.2	2.3 injection/Turbo	35 pins	3 pins	

Location of components

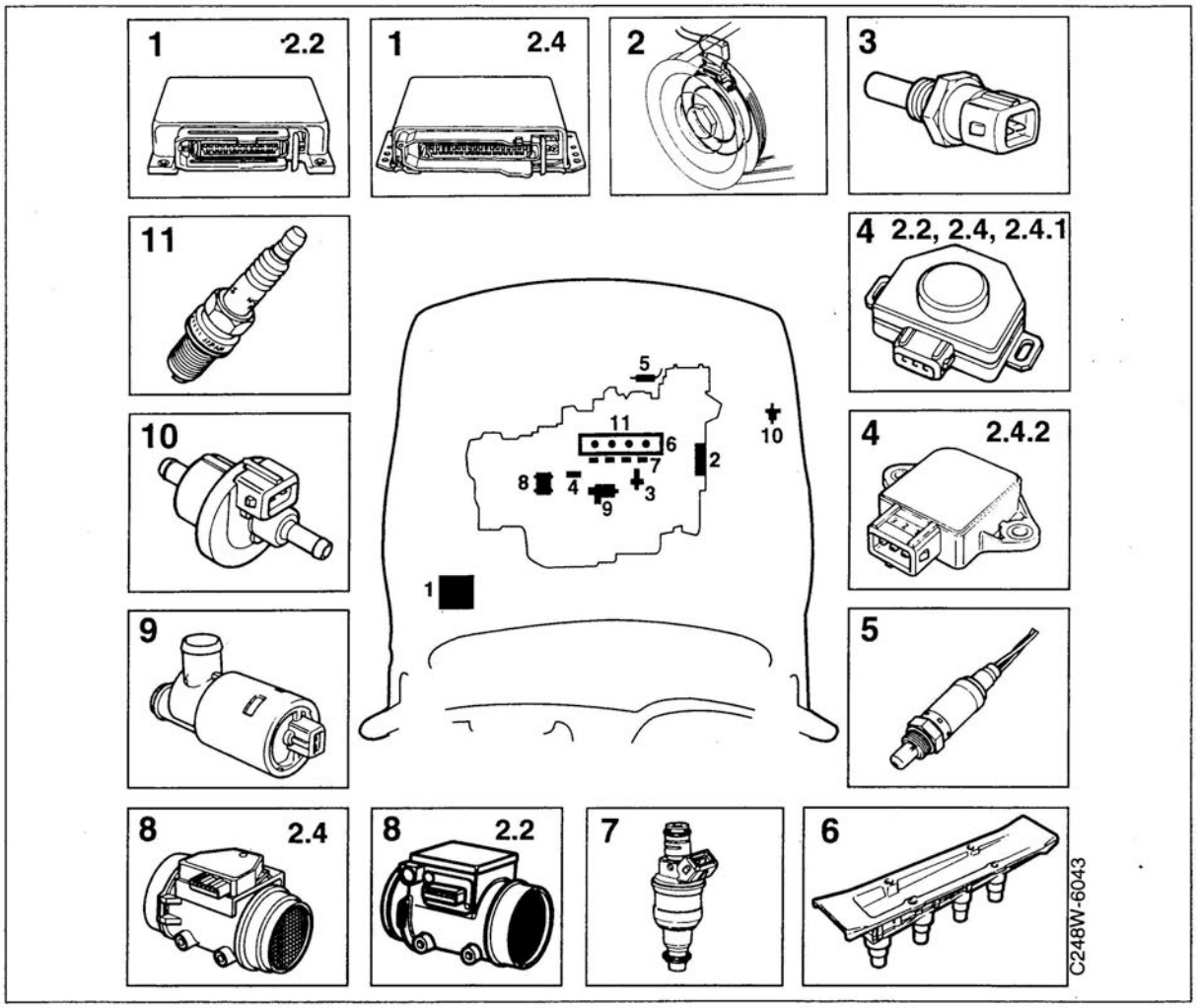

1 Control module
2 Crankshaft position sensor
3 Engine coolant temperature sensor
4 Throttle position switch (LH 2.2, 2.4, 2.4.1)
Throttle position sensor (LH 2.4.2)
5 Oxygen sensor
6 Saab ignition discharge module
7 Injector
8 Mass air flow sensor
9 IAC valve
10 EVAP canister purge valve
11 Spark plug

Sensors

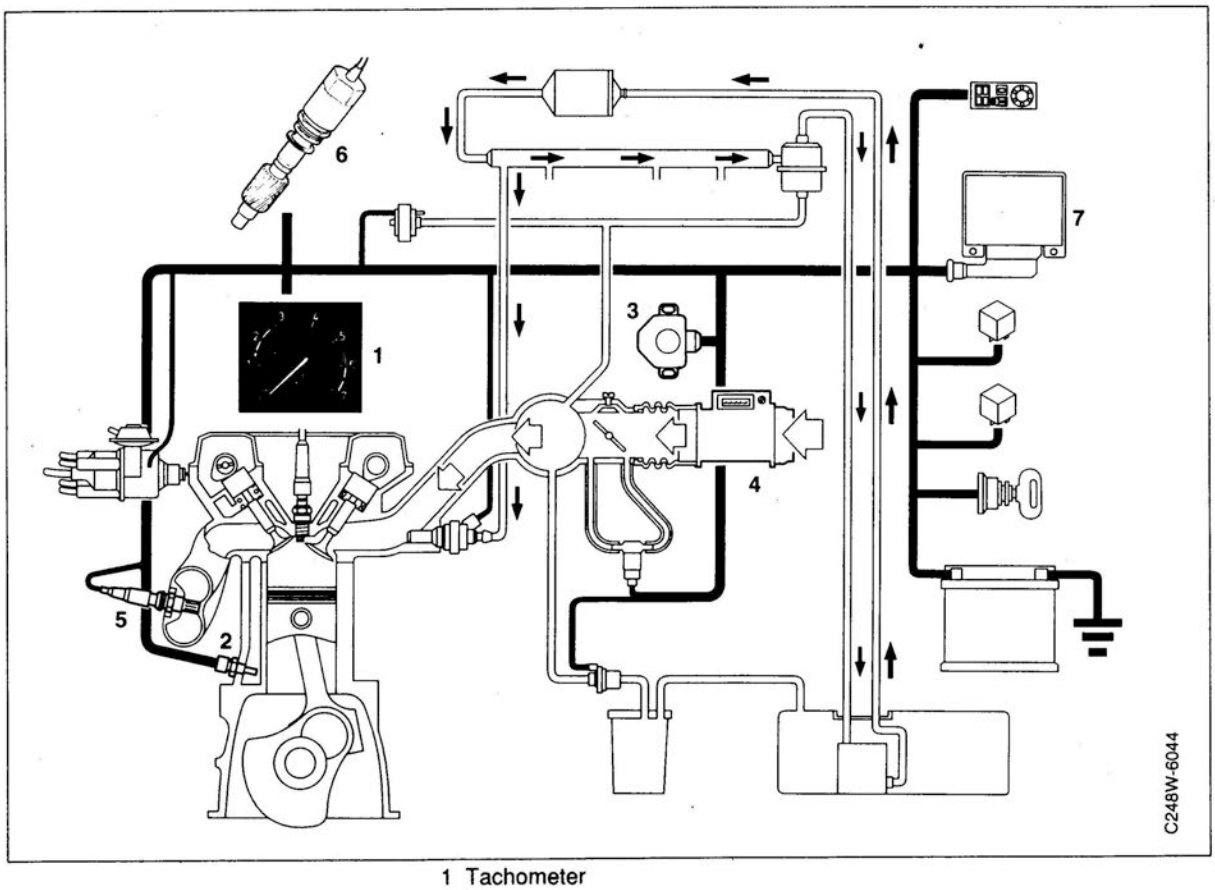

1 Tachometer
2 Temperature sensor
3 Throttle position switch/sensor
4 Mass air flow sensor
5 Oxygen sensor
6 Speed sensor
7 Control module

The control module (7) receives information from the following sensors:

The ignition system provides information on engine speed (1).

The temperature sensor (2) provides information on the temperature of the engine coolant.

The throttle position switch (3) provides information on the position of the throttle butterfly. In the LH 2.4.2 system, the switch is replaced by a sensor of potentiometer type.

The mass air flow sensor (4) provides information on the air mass supplied to the engine.

The oxygen sensor (5) provides information on the oxygen content of the exhaust gases.

The speed sensor (6) provides information on the speed of the car.

Principle of operation, all systems

The system works as follows: An electric **fuel pump** sucks fuel from the fuel tank and builds up pressure in the system. The pressure is determined by a **fuel pressure regulator** which maintains the pressure at a constant level relative to the pressure in the engine intake manifold. As a result, the amount of fuel injected into the engine is not affected by the varying pressure in the intake manifold but only by the length of time the injector remains open.

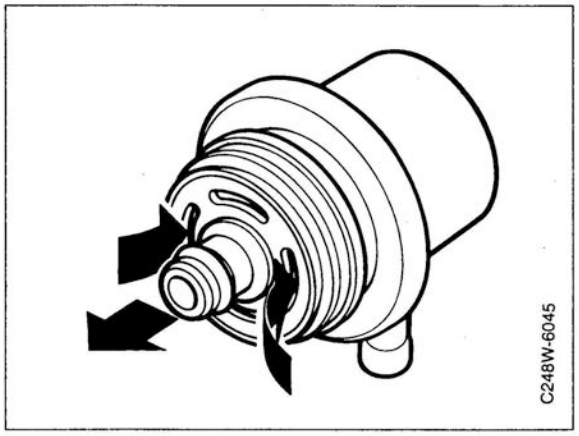

Fuel pressure regulator

Fuel is injected by **injectors** (electrically controlled solenoid valves). These are mounted in the intake manifold and connected by a common **fuel rail**.

Injector opening duration is governed by the engine load.

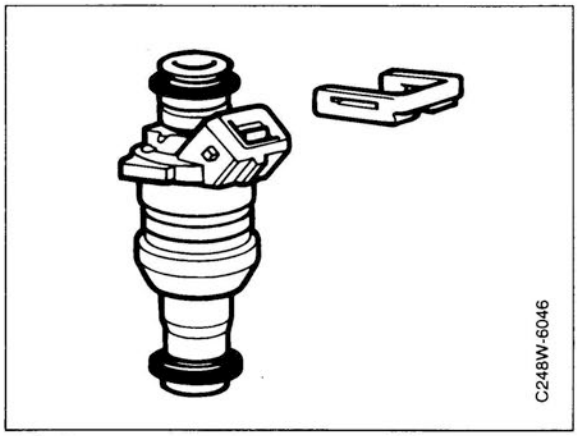

Injector

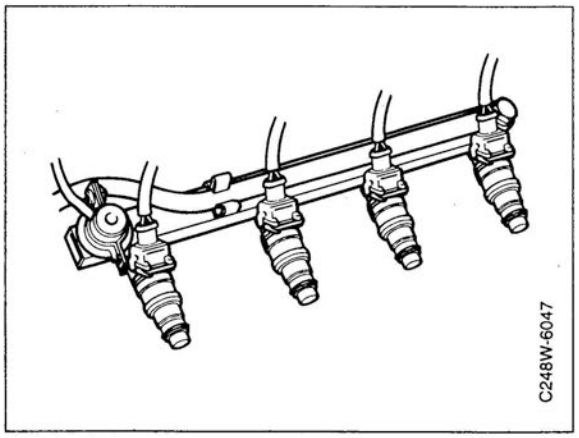

Fuel rail

Running concentrically through the mass air flow sensor is an air passage inside which is a tube containing a platinum filament (hot wire). The temperature of the filament is maintained at about 100°C (212°F) above the temperature of the intake air (mass air flow sensors of aluminium). In mass air flow sensors of plastic the temperature difference is 120°C.

In the LH 2.4.1 and 2.4.2, the temperature difference is 155°C (310°F). This makes for higher accuracy.

The current required to maintain the filament at a constant temperature tells the control module of the magnitude of the intake air mass.

Since the filament is located in the inlet duct it is liable to become soiled and so lose its sensitivity, which will affect measurement accuracy. To obviate this and keep the filament clean, it is heated to about 1 000°C (1830°F) for one second. This burn-off function takes place 20 seconds (4 seconds for the LH 2.2) after the engine has been switched off.

In the event of a break in the signal from the mass air flow sensor, as might be caused by a broken filament, an emergency "Limp Home" program built into the control module will take over. This will enable the car to be driven but only to a limited extent and with poorer performance. When the emergency "Limp Home" function is active, the "CHECK ENGINE" lamp (MIL) on the main instrument display panel will light up.

Signals from the **temperature sensor** (engine coolant temperature), or **throttle position switch/ sensor** are sent to the control module. The control module is also supplied with ignition pulses from the ignition system and signals from the mass air flow sensor. On the basis of these signals and stored data, the control module calculates the opening duration of the injectors.

Filament burn-off in the mass air flow sensor is also controlled by the electronic control module.

Full-load enrichment at different engine speeds, extra acceleration enrichment when the engine is cold, and idling speed on cars fitted with IAC are other functions programmed in the control module.

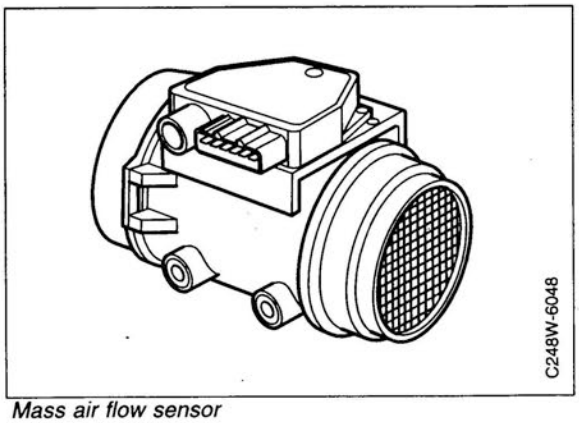

Mass air flow sensor

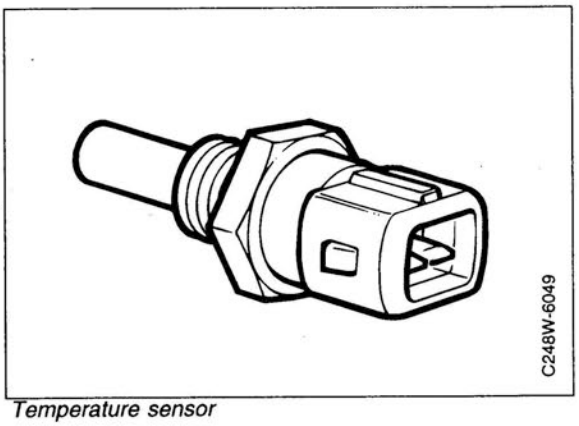

Temperature sensor

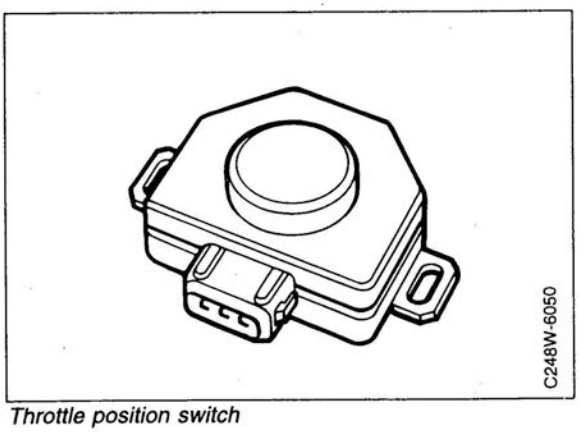

Throttle position switch

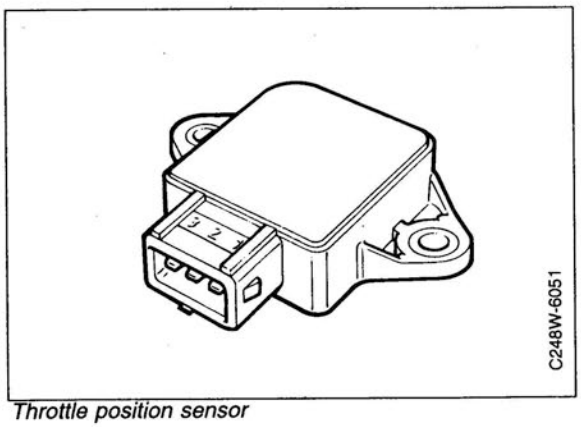

Throttle position sensor

The LH 2.2 system

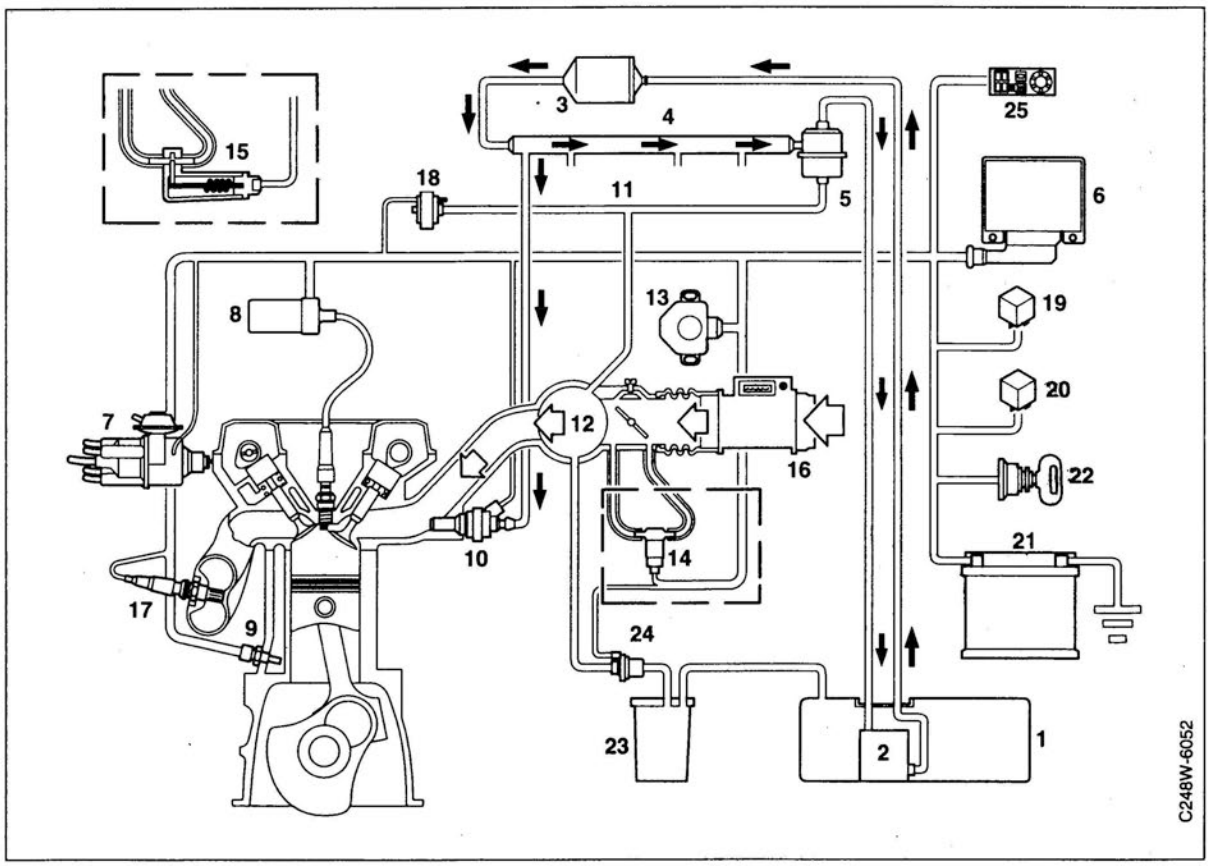

1 Fuel tank
2 Fuel pump
3 Fuel filter
4 Fuel rail
5 Fuel pressure regulator
6 LH control module
7 Distributor
8 Ignition coil
9 Temperature sensor
10 Injector
11 Vacuum line
12 Intake manifold
13 Throttle position switch
14 IAC valve (M1986-)
15 Auxiliary air valve (M1985)
16 Mass air flow meter
17 Oxygen sensor (only cars with catalytic converter)
18 Pressure switch (not normally aspirated engines)
19 Main relay
20 Fuel pump relay
21 Battery
22 Ignition switch
23 EVAP emission canister
24 EVAP canister purge valve
25 Test socket (TSI)

The LH 2.4 system

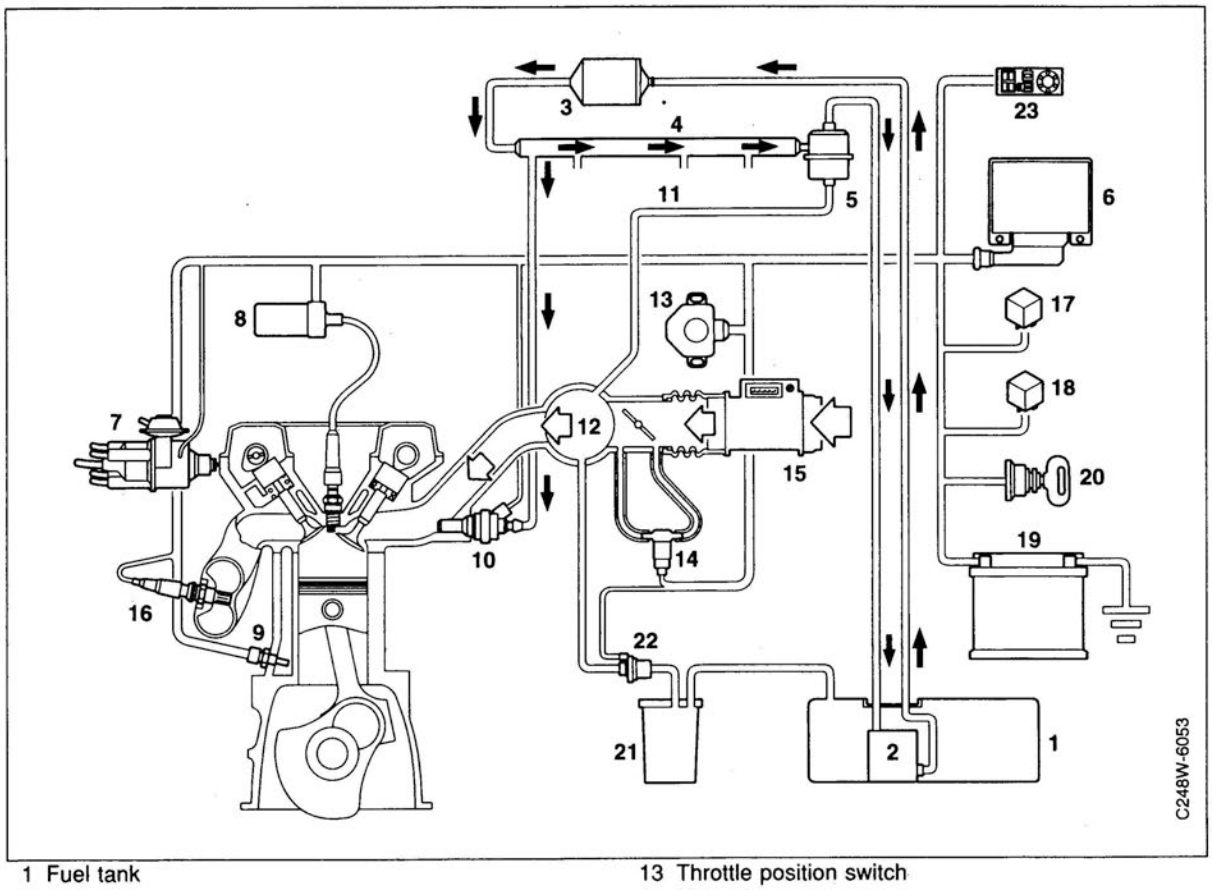

1 Fuel tank
2 Fuel pump
3 Fuel filter
4 Fuel rail
5 Fuel pressure regulator
6 LH control module
7 Distributor
8 Ignition coil
9 Temperature sensor
10 Injector
11 Vacuum line
12 Intake manifold
13 Throttle position switch
14 IAC valve
15 Mass air flow meter
16 Oxygen sensor (only cars with catalytic converter)
17 Main relay
18 Fuel pump relay
19 Battery
20 Ignition switch
21 EVAP emission canister
22 EVAP canister purge valve
23 Test socket (TSI)

The LH 2.4.1 system

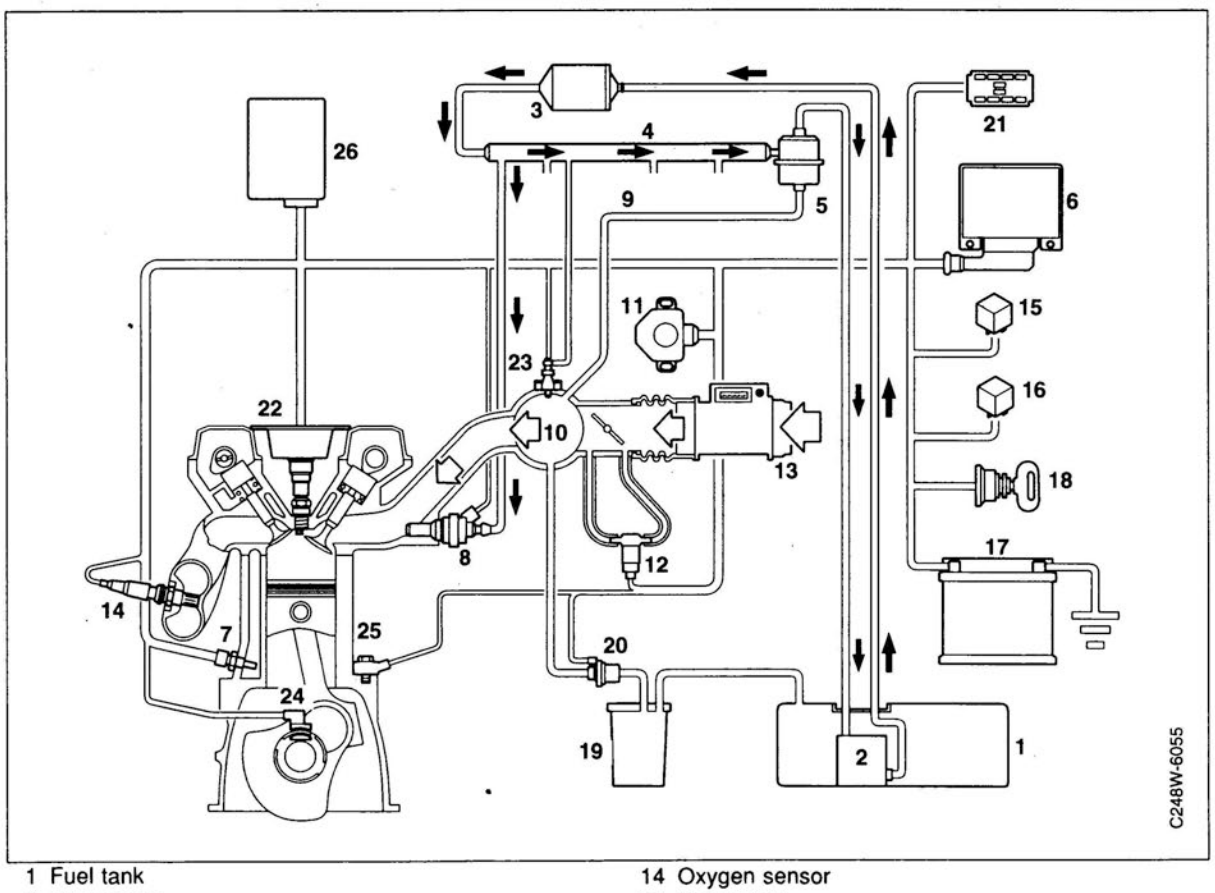

1 Fuel tank
2 Fuel pump
3 Fuel filter
4 Fuel rail
5 Fuel pressure regulator
6 LH control module
7 Temperature sensor
8 Injector
9 Vacuum line
10 Intake manifold
11 Throttle position switch
12 IAC valve
13 Mass air flow sensor
14 Oxygen sensor
15 Main relay
16 Fuel pump relay
17 Battery
18 Ignition switch
19 EVAP emission canister
20 EVAP canister purge valve
21 Data link connector
22 Saab DI electronic ignition
23 Cold starting valve
24 Crankshaft position sensor
25 Knock sensor
26 DI/APC control module

The LH 2.4.2 system

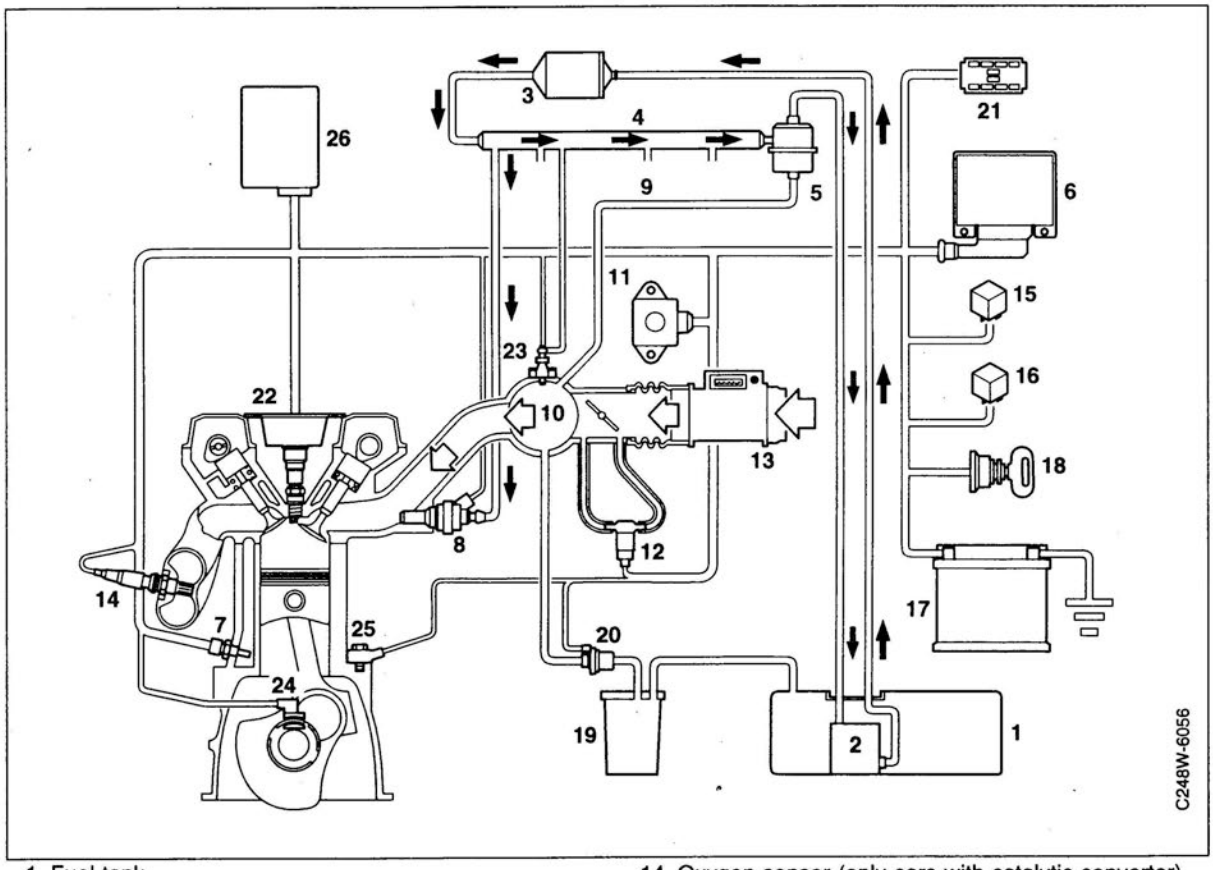

1 Fuel tank
2 Fuel pump
3 Fuel filter
4 Fuel rail
5 Fuel pressure regulator
6 LH control module
7 Temperature sensor
8 Injector
9 Vacuum line
10 Intake manifold
11 Throttle position sensor
12 IAC valve
13 Mass air flow sensor
14 Oxygen sensor (only cars with catalytic converter)
15 Main relay
16 Fuel pump relay
17 Battery
18 Ignition switch
19 EVAP emission canister
20 EVAP canister purge valve
21 Data link connector
22 Saab DI electronic ignition
23 Cold starting valve
24 Crankshaft position sensor
25 Knock sensor
26 DI/APC control module

Mass air flow sensors

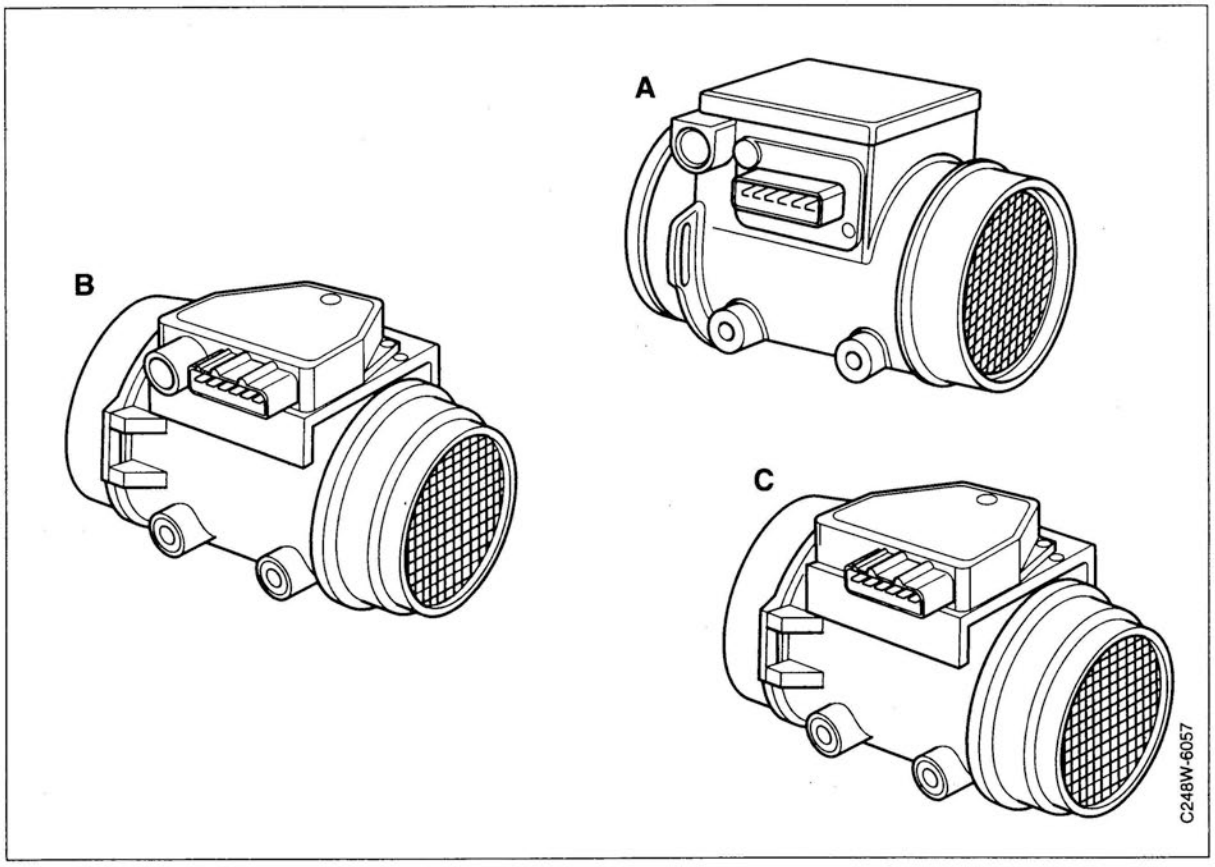

A Mass air flow sensor (aluminium)
B Mass air flow sensor (plastic with CO adjusting screw)
C Mass air flow sensor (plastic without CO adjusting screw)

General

There are three types of mass air flow sensor. They are not interchangeable.

Mass air flow meters in both aluminium and plastic versions with a CO adjusting screw occur in the LH 2.2 system.

Only mass air flow meters of plastic without a CO adjusting screw occur in the LH 2.4, 2.4.1 and 2.4.2 (cars with catalytic converter) systems.

The LH 2.4.2 system (cars without a catalytic converter) features a mass air flow meter of plastic with a CO adjusting screw.

Important

A mass air flow meter of plastic must never be replaced by a mass air flow sensor of aluminium or vice versa. If this is done the LH system will be rendered unserviceable.

Mass air flow sensors (contd.)

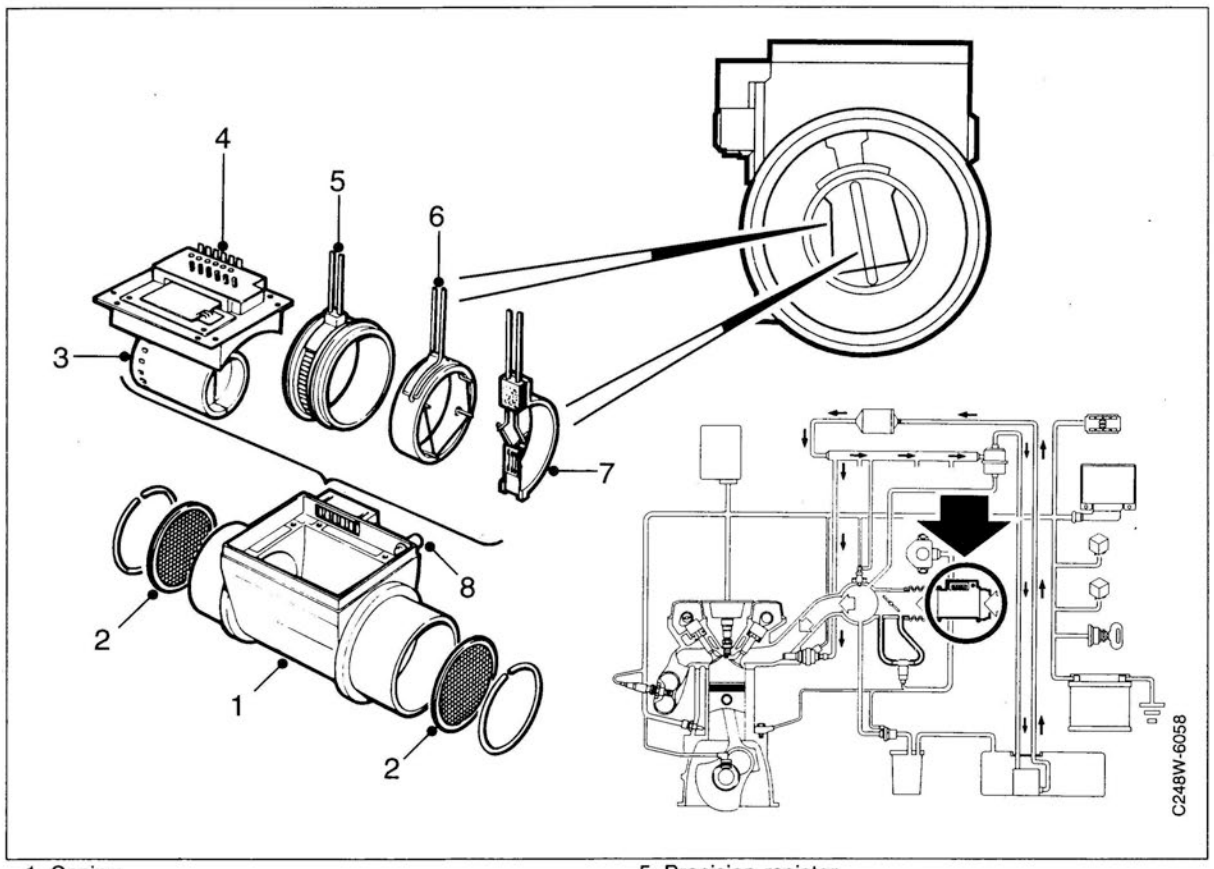

1 Casing
2 Fine-mesh filter
3 Concentric tube
4 Module
5 Precision resistor
6 Filament (hot wire)
7 Temperature compensation sensor
8 CO adjusting screw

Description

The mass air flow sensor, located between the air cleaner and intake manifold, measures the air mass passing through it. In air **mass** measurement (and not air **volume** measurement), the changes in air density which occur with every change in air temperature and air pressure are taken into account.

Since the mass air flow sensor measures the mass of the air and not just the flow, it is important to ensure that no air leakage occurs after it on the downstream side.

The most important parts of the mass air flow sensor are a thin filament (hot wire) of platinum and a temperature-dependent resistor. The temperature of the filament is maintained at a constant 100°C (212°F) above the temperature of the inlet air (aluminium mass air flow sensors). In mass air flow sensors of plastic the temperature difference is 120°C.

In the LH 2.4.1 and 2.4.2 systems the temperature difference is increased to 155°C (310°F) for higher measurement accuracy.

Control of the current needed to maintain the filament at a constant temperature is effected by a bridge circuit and a detector resistor. The voltage variations are directly proportional to the mass of the inlet air.

The electrical components are grouped in a module on the mass air flow sensor casing. This module also contains a potentiometer for adjusting the CO content at idling speed (only LH 2.2 and LH 2.4.2 on cars without a catalytic converter).

Note

The components shown in the illustration are not available as spare parts.

Mass air flow sensors (contd.)

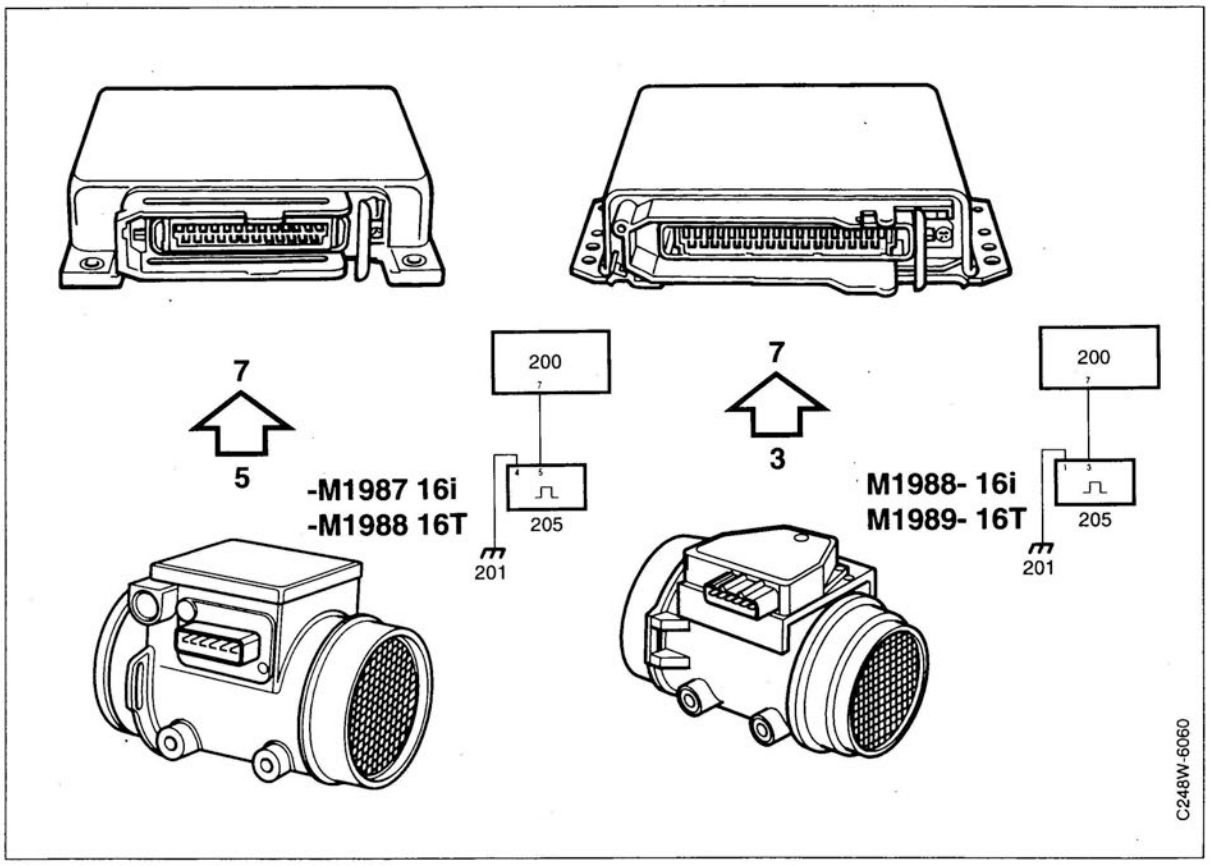

The mass air flow sensor maintains the temperature of the filament at a constant number of degrees above the temperature of the inlet air.

LH 2.2, aluminium: 100°C

LH 2.2 and LH 2.4, plastic: 120°C

LH 2.4.1 and 2.4.2, plastic: 155°C

The power needed to maintain the temperature of the filament at a constant level depends on the cooling effect of the air flowing past it. This cooling effect varies with the air mass passing through the mass air flow sensor.

The variations in voltage, which are determined by the mass of the inlet air, are transmitted to the LH control module from the mass air flow sensor as follows:

-M1987 fuel injection and -M1988 Turbo

from pin 5 to pin 7

M1988- fuel injection and M1989- Turbo

from pin 3 to pin 7.

Mass air flow sensors (contd.)

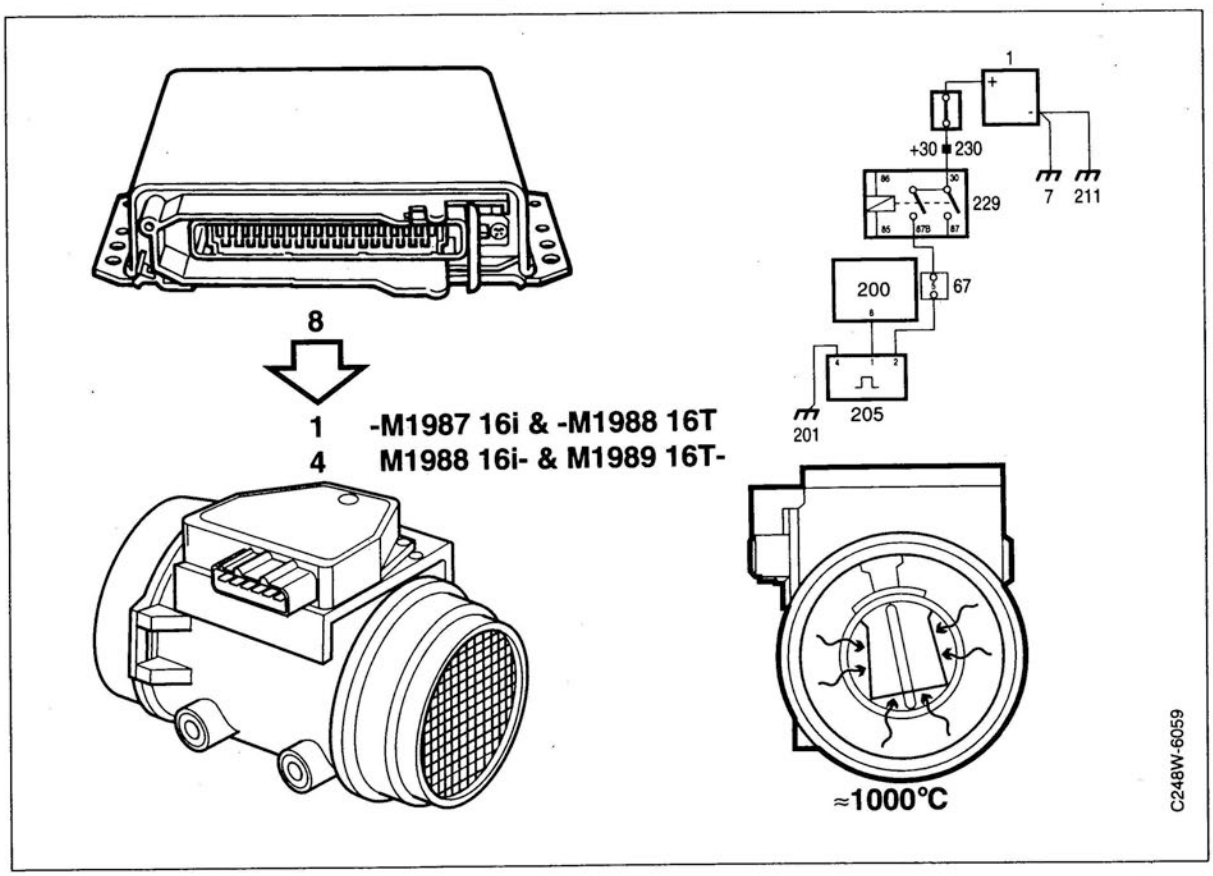

Burn-off

Due to the location of the filament in the inlet duct, it is liable to become soiled and so lose its sensitivity, which will affect measurement accuracy. To obviate this and keep the filament clean, it is heated to about 1 000°C.

This "burn-off" function starts 20 seconds (4 seconds for the LH 2.2) after the engine has been switched off and continues for about 1 second. However, a condition for burn-off is that the engine has attained a temperature of 61°C and has been run at a speed above 2100 rpm.

Control module

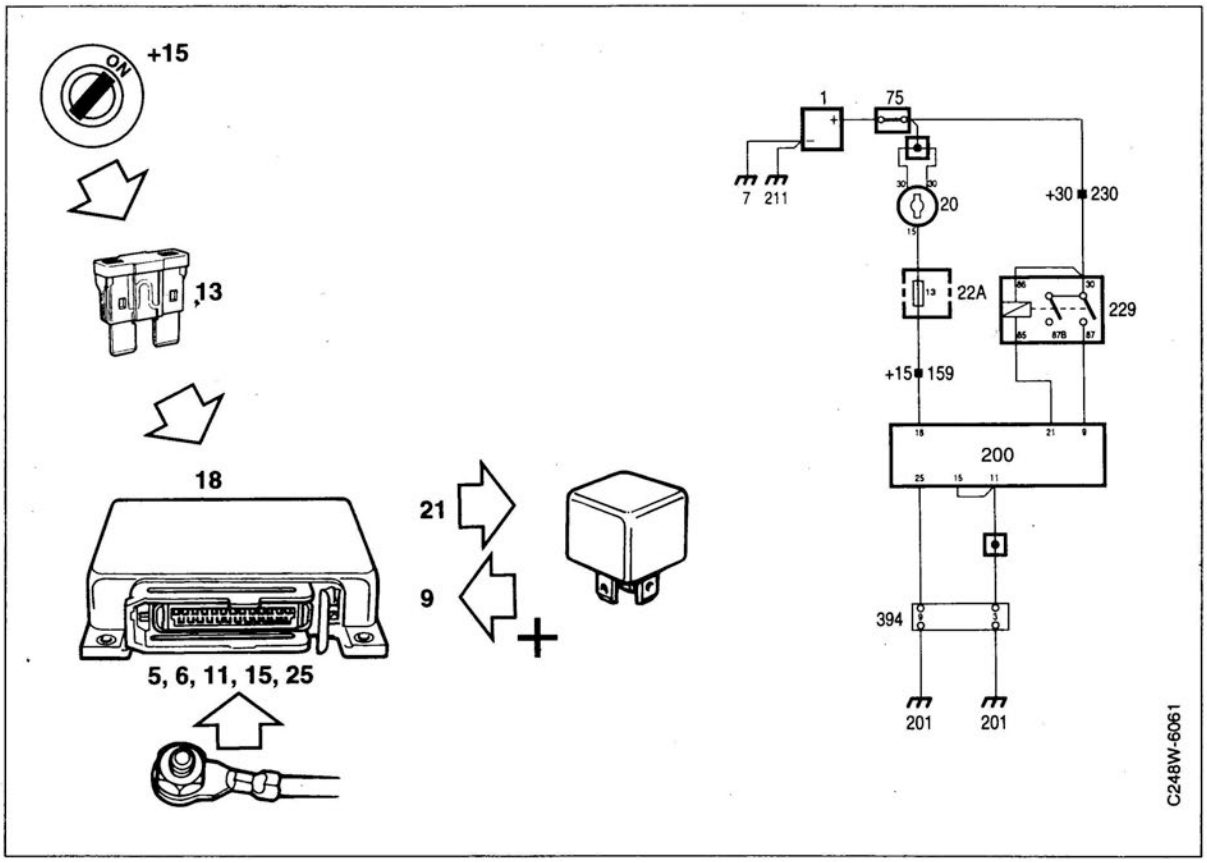

Description, LH 2.2

The LH control module is located in the engine bay on the left-hand side at the bulkhead partition.

The control module contains a microprocessor with a memory holding all the comparative data needed by the processor, such as for engine speed limitation, full-load enrichment, filament burn-off, etc.

The control module processes the signals from the mass air flow sensor and various other sensors, as well as from the memory, and calculates (controls) injector opening duration.

Also incorporated in the control module are help functions in the form of permanently stored signals which are activated in the event of a break in the signals from the mass air flow sensor or temperature sensor:

- Mass air flow sensor: "Limp Home" function
- Temperature sensor: simulated signal, +45°C (+20°C for LH 2.2) engine temperature

The "CHECK ENGINE" warning lamp (MIL) lights up in the event of these two faults occurring, see also page 48.

Power supply

When the ignition switch is in the ON position, a +15 current is supplied to pin 18 via fuse 13. Voltage to and from the main relay is supplied via pins 21 and 9.

The control module is connected to ground via pins 5, 6, 11, 15 and 25.

Control module (contd.)

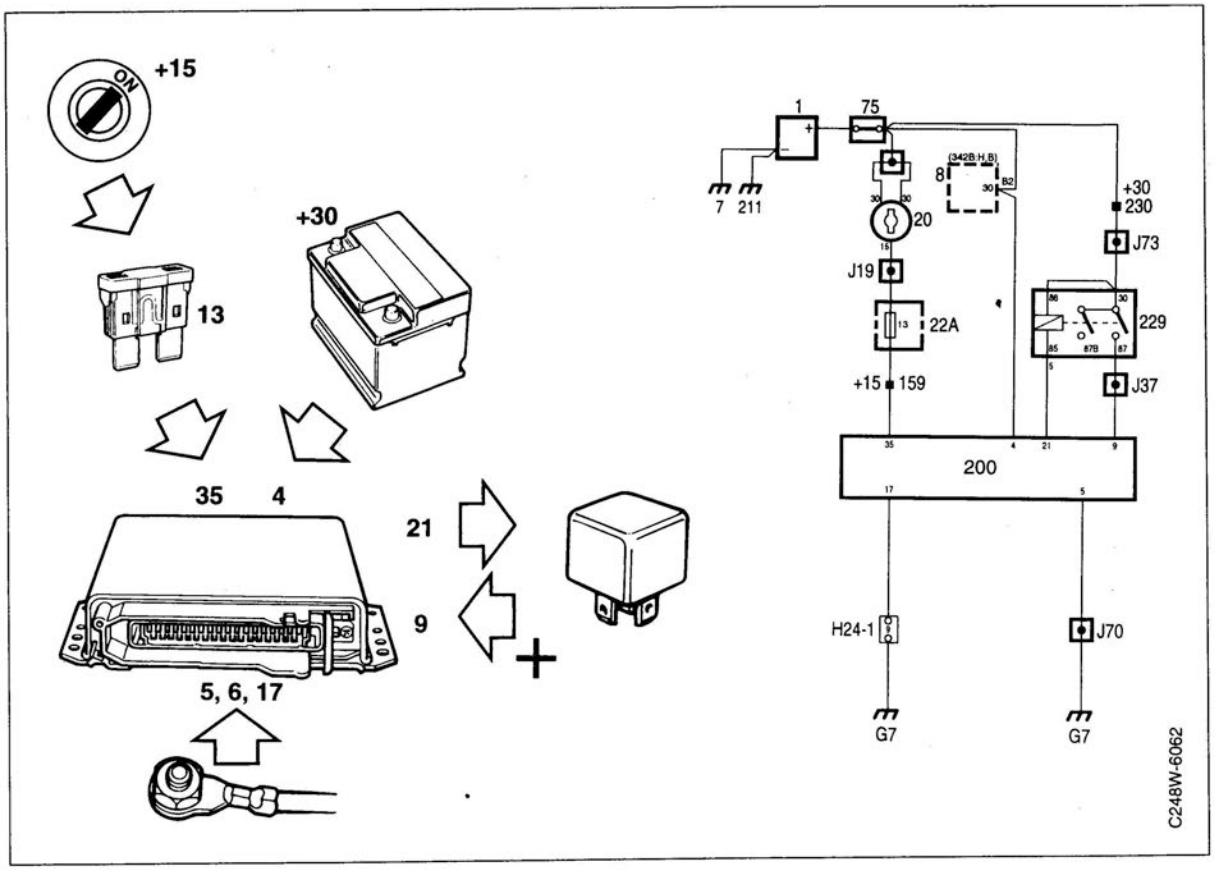

Description (LH 2.4, 2.4.1 and 2.4.2)

The control module in the LH 2.4 system has expanded memory capacity. Owing to this increased memory capacity, more checking and controlling functions can be performed.

As a result of its memory expansion, the control module is fitted with a 35-pin connector instead of the 25-pin connector fitted previously.

For an overview of all control modules, see the Technical Data section.

Additional functions have been incorporated in the LH 2.4.1 control module. These are idle speed control and time-delay for AC engagement. In earlier systems, this time delay is obtained from a time-delay relay. In addition, the diagnostic function has been augmented.

The control module in the LH 2.4.2 system has a further augmentation of the diagnostic function. Additionally, the oxygen sensor engagement condition when starting from cold has been changed and engagement is now controlled by time instead of by temperature as previously. As a result, the theoretical limit for the start of idle speed control is lowered from 16°C to 0°C.

On cars equipped with the Traction Control System (TCS), idle speed control is effected by the ETS control module.

Power supply

The LH control module is supplied with power continuously via pin 4 (+30 supply). When the ignition switch is in the ON position, +15 current is also supplied to pin 35 via fuse 13. Voltage to and from the main relay is supplied via pins 21 and 9.

The control module is connected to ground via pins 5, 6, 17 and 18.

Temperature sensor

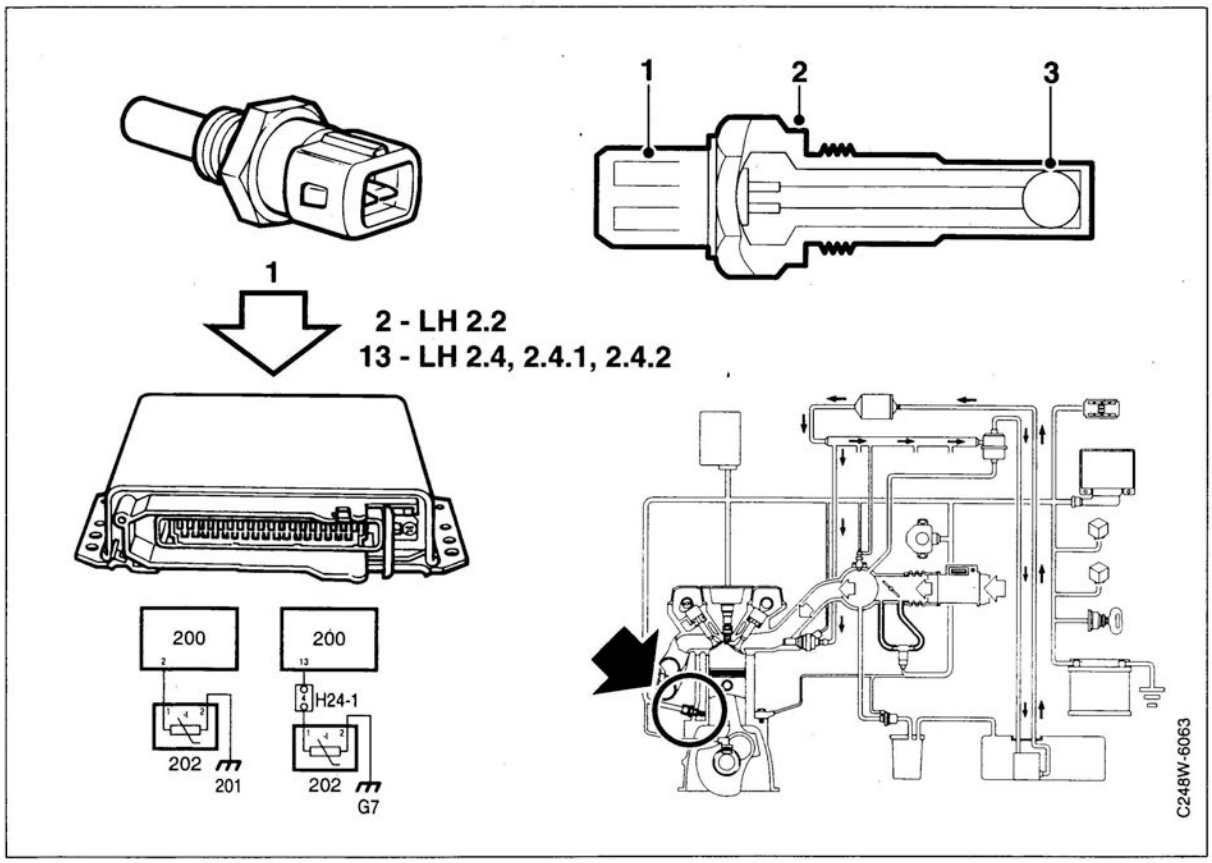

1 Electrical connection
2 Metal housing
3 NTC resistor

Description

The temperature sensor supplies the control module continuously with engine temperature information.

The engine coolant temperature sensor consists of a brass body containing a resistor of NTC (Negative Temperature Coefficient) type, i.e. its resistance decreases with increasing temperature.

When starting from cold and during the warm-up period, the engine requires a much richer fuel-air mixture on account of condensation losses in combustion chambers and the intake manifold.

As engine temperature rises, the amount of fuel injected decreases successively.

Oxygen sensor

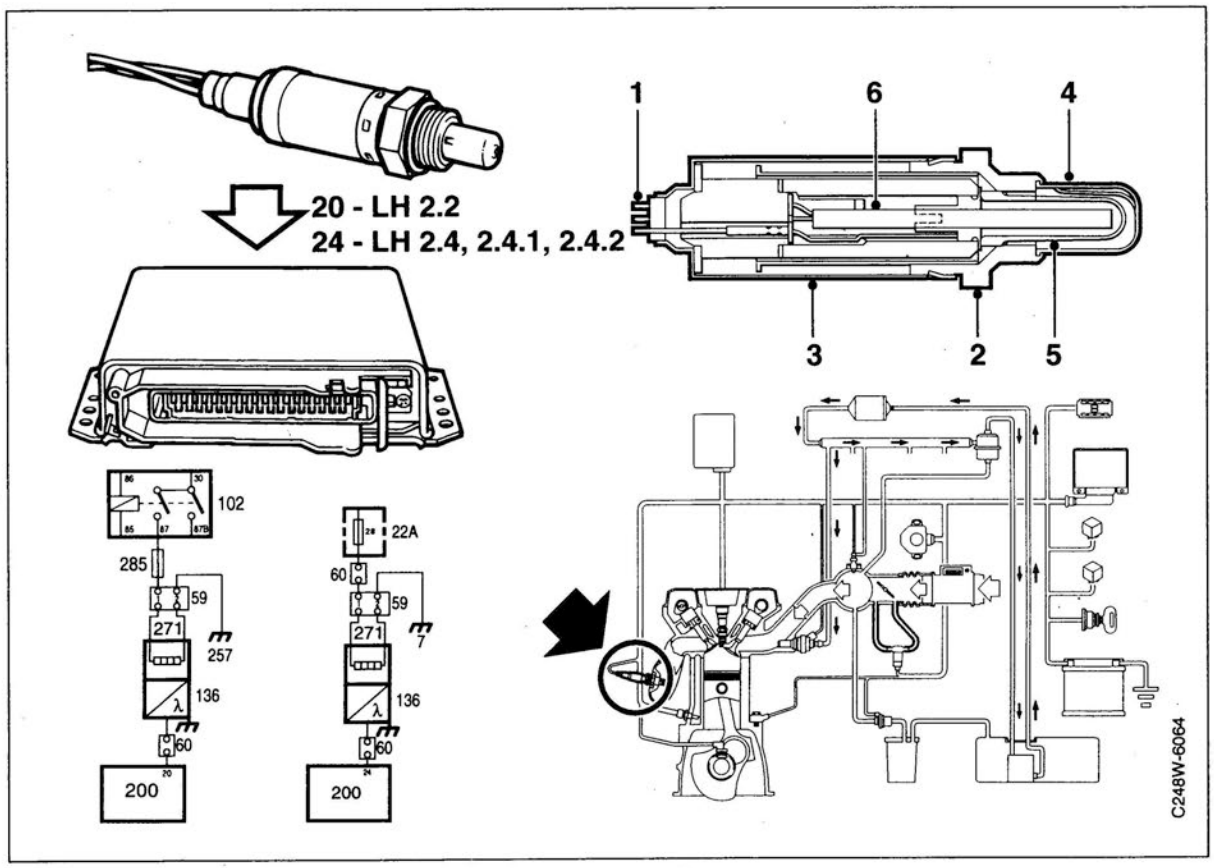

1 Electrical connection
2 Metal housing
3 Protective casing
4 Protective cap
5 Primary cell
6 Heating element

Description

The oxygen sensor is situated in the exhaust pipe ahead of the catalytic converter. The sensor monitors the exhaust gases by measuring their oxygen content. On the basis of this information, calculations are performed by the control module which adjusts the fuel-air mixture accordingly. This is important for the efficiency of the catalytic converter.

The oxygen sensor's sensing element consists of a primary cell (5). The primary cell contains a solid electrolyte consisting of zirconium oxide. The oxygen sensor compares the oxygen content of the exhaust gases with the oxygen content of the ambient air.

The operating range of the oxygen sensor is between 0 and 1 V and its working temperature between 200°C and 850°C. The heating element ensures that the sensor reaches operating temperature more rapidly.

The oxygen sensor is self-cleaning and it has a long service life.

In the event of an open circuit, the "CHECK ENGINE" lamp (MIL) in the combined instrument display panel lights up at the same time as the control module adopts a preprogrammed default value.

Cars fitted with an oxygen sensor should be run on unleaded petrol only. Otherwise the ceramic material will become coated with lead, rendering the oxygen sensor unserviceable.

Throttle position switch

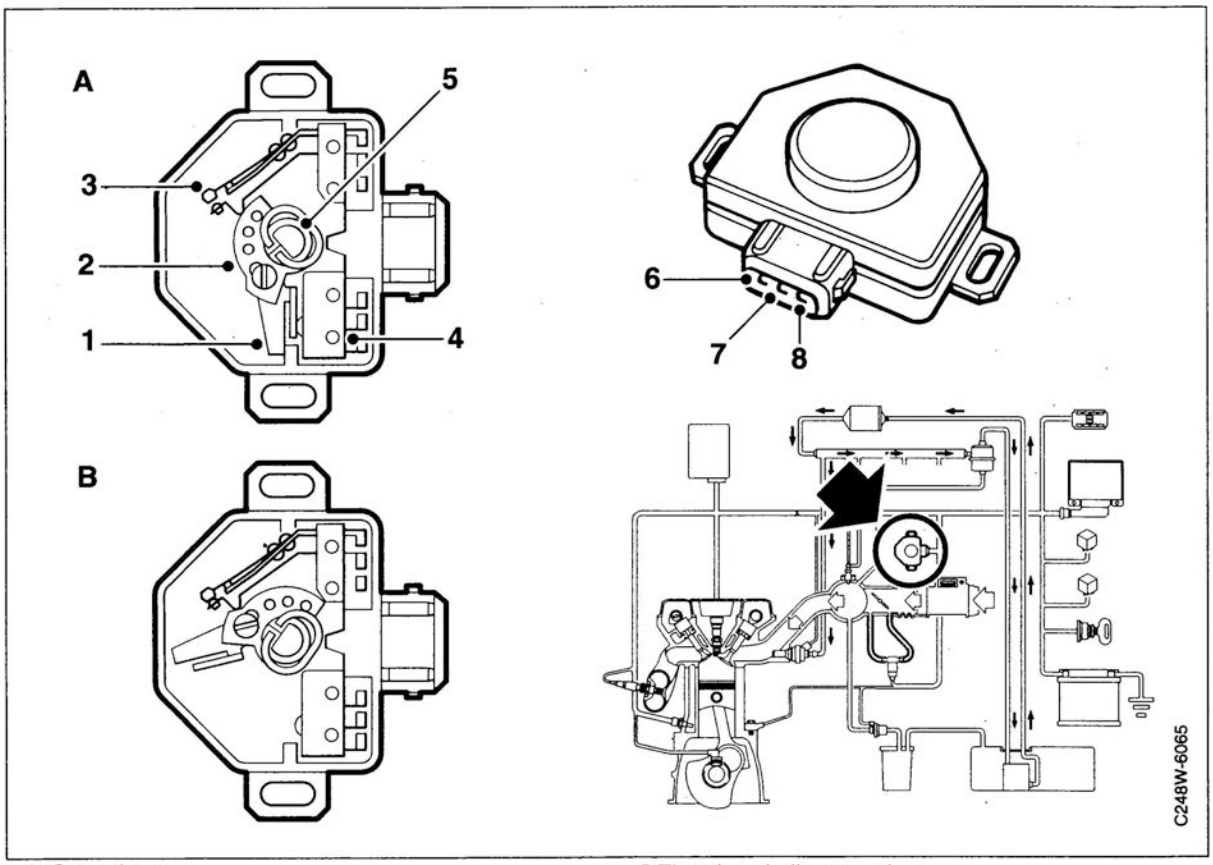

1 Operating arm
2 Cam
3 Wide open throttle switch
4 Microswitch
5 Throttle spindle extension
6 Full-load connection
7 Ground connection
8 Idle speed connection

Description

The position switch provides the control module with information on the position of the throttle: idling speed, partial throttle or wide open throttle.

In the LH 2.4.2 system the position switch is replaced by a throttle position sensor.

A Idling speed

When the throttle is closed (idling speed or engine braking), the microswitch (4) closes and ground potential is obtained on idling speed connection 8.

Partial throttle

When the throttle is activated, the microswitch (4) opens and the ground potential from idling speed connection 8 disappears.

B Wide open throttle

When the throttle angle is greater than 72°, the wide open throttle switch (3) closes and ground potential is obtained on full-load connection 6. After a calculation performed by the control module, this provides full-load enrichment of the fuel-air mixture.

Starting from cold

If the accelerator is floored when the engine is started at temperatures below -20°C, the control module issues an order to reduce the amount of fuel injected into the engine. This prevents the engine from becoming flooded.

(LH 2.4, 2.4.1 and 2.4.2 only)
If repeated attempts to start are made, the enrichment cycle will not be activated for starting from cold afresh. This prevents exceptionally generous enrichment and a consequently flooded engine.

Throttle position sensor

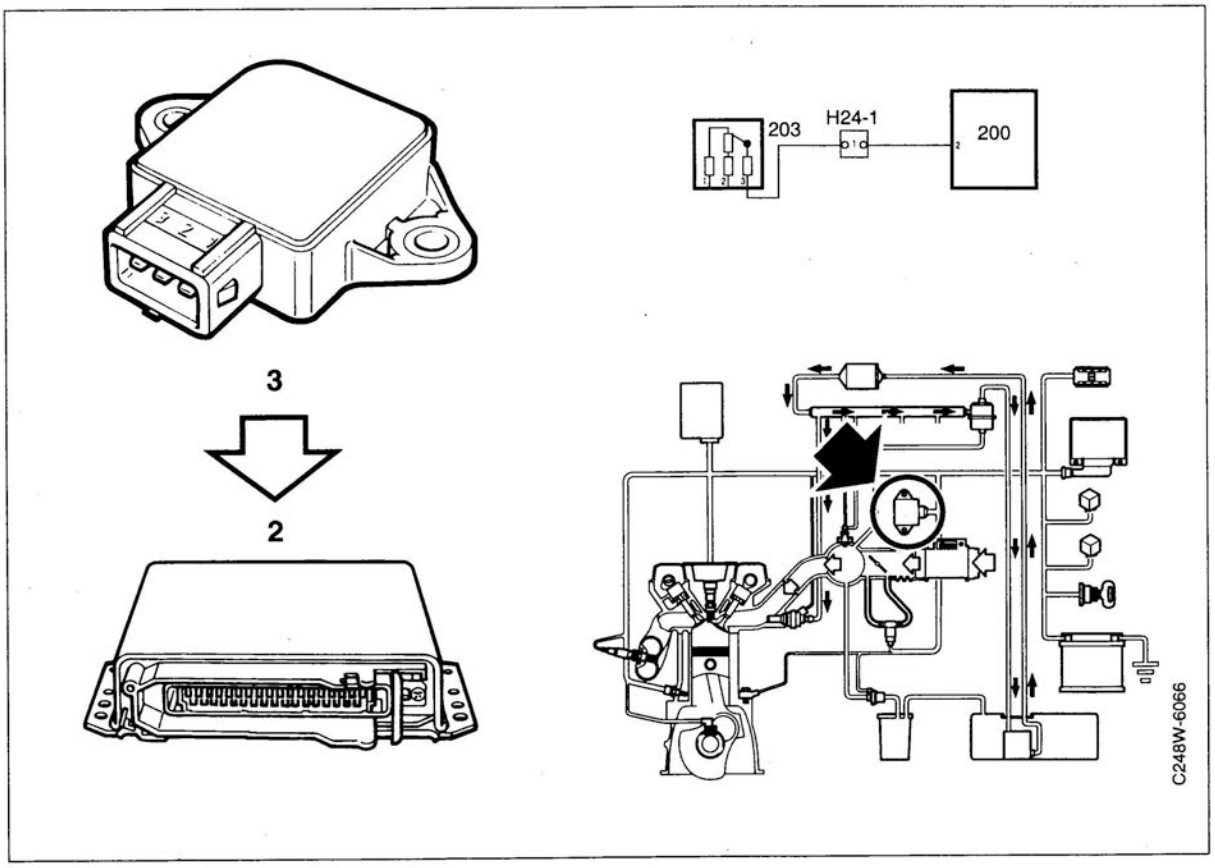

Description

The throttle position switch is replaced in the LH 2.4.2 system by a position sensor. This provides the control module steplessly with information on the position of the throttle.

Throttle position sensing is adaptive, which means that the control module "learns" which throttle angle signals correspond to idling speed and wide open throttle. As a result, all manual adjustment of the position sensor is unnecessary although basic setting must be carried out manually.

Auxiliary air valve

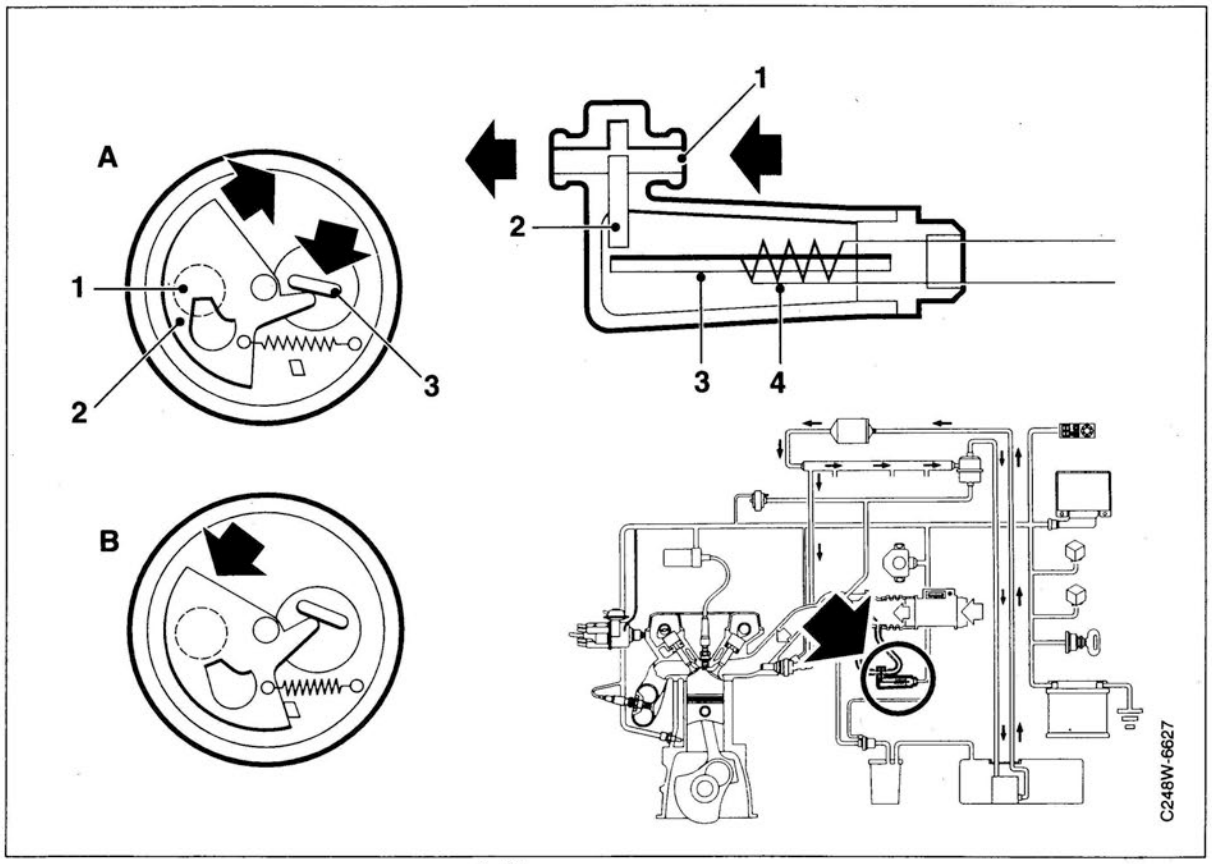

1 Air passage
2 Valve disc
3 Bimetal strip
4 Heating coil

A = open
B = closed

Description

The auxiliary air valve (model year 1985 EU only) compensates for friction losses in connection with starting from cold by allowing air to bypass the throttle butterfly. On model year 1986 and later cars, the auxiliary air valve is replaced by an idle air control valve.

The auxiliary air valve consists of an aluminium housing with an electrical connection and spigots for the hoses from the throttle body.

Running through the aluminium housing is an air passage (1) which is opened and closed by a valve disc (2).

When the engine is cold the valve disc allows air to flow past the throttle butterfly. In combination with the boost of fuel provided by the injectors, this compensates for friction and condensation losses in the intake manifold and combustion chambers. In addition, the desired idle speed is obtained during the warm-up period.

When the engine is cold the air passage is fully open. When the engine is started a heating coil (4) is energized and, together with the heat given off by the engine, heats up the bimetal strip (3). As a result, the air passage will gradually be closed by the valve disc.

When the engine has been warmed up the heat given off by it acts on the bimetal strip and the valve disc is kept almost completely closed.

Idle air control valve, LH 2.2 (IAC-valve)

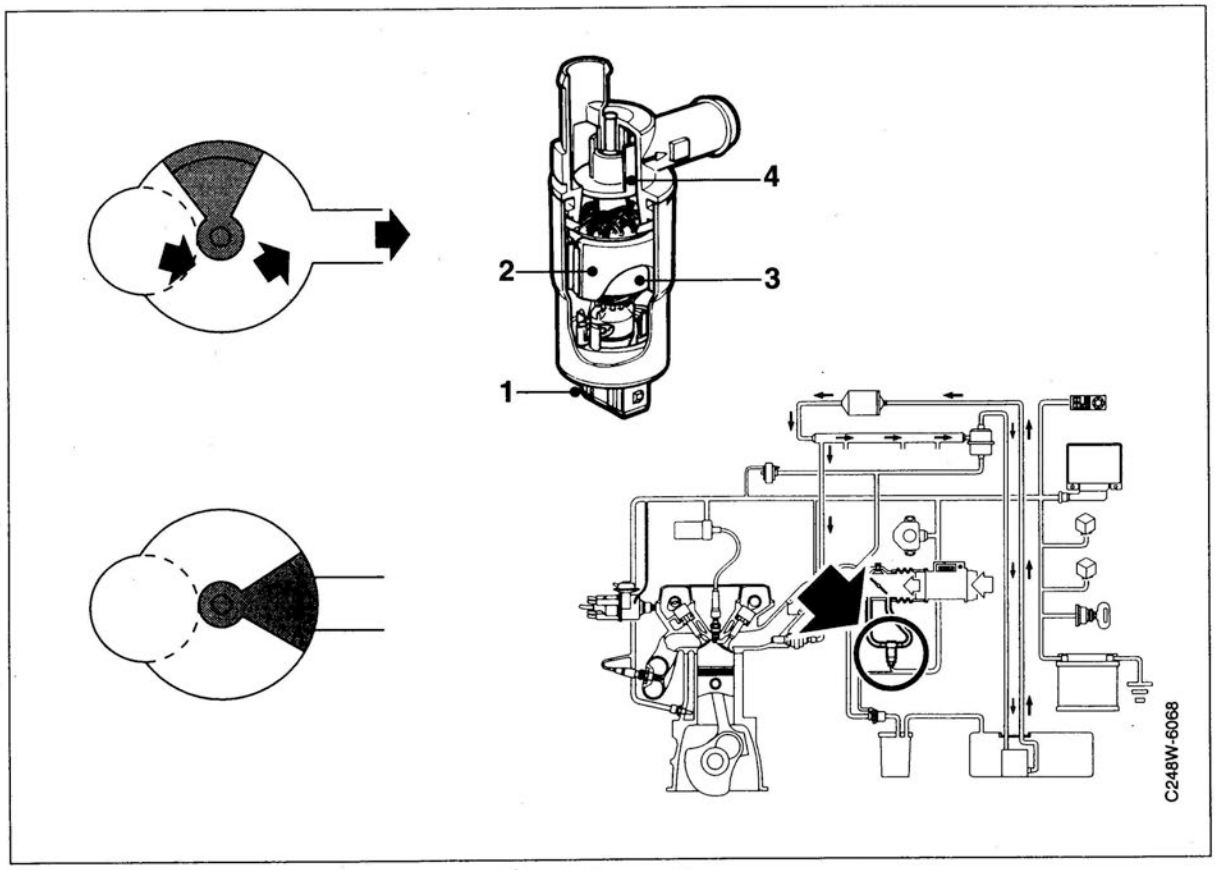

1 Electrical connection
2 Coils
3 Rotor, reversible
4 Valve

Description

On 1986 and later cars the auxiliary air valve is replaced by an idle air control valve (IAC) which also compensates for momentary load increases at idling speed.

The idle air control valve is bolted to a bracket mounted on the intake manifold. The valve allows a controlled flow of air to bypass the throttle butterfly. The volume of the air is determined by the degree of opening of the idle air control valve.

The idle air control valve consists of a slide valve with a reversible motor. The motor has two windings and maintains a continuous reciprocating action, turning the slide through a maximum angle of 90°. The motor receives signals from the control module.

Due to the motor's continuous, limited-travel reciprocating action (noticeable only as vibration), the opening of the valve can be varied within extremely short periods of time (opening/closing in about 150-200 ms). This permits the air flowing through the valve to be controlled at all times so that the volume necessary for obtaining the desired constant or increased idle speed can be achieved as required.

On model year 1989 and later cars the earlier dashpot function has been discontinued. This function is now programmed in the control module.

The dashpot is a mechanical throttle damper which delays closing of the throttle when the accelerator is released and helps to prevent the exhaust gases from having an unfavourable composition. Greater comfort during engine braking is also provided by the dashpot.

Idle air control valve (IAC valve), LH 2.4, 2.4.1 and 2.4.2

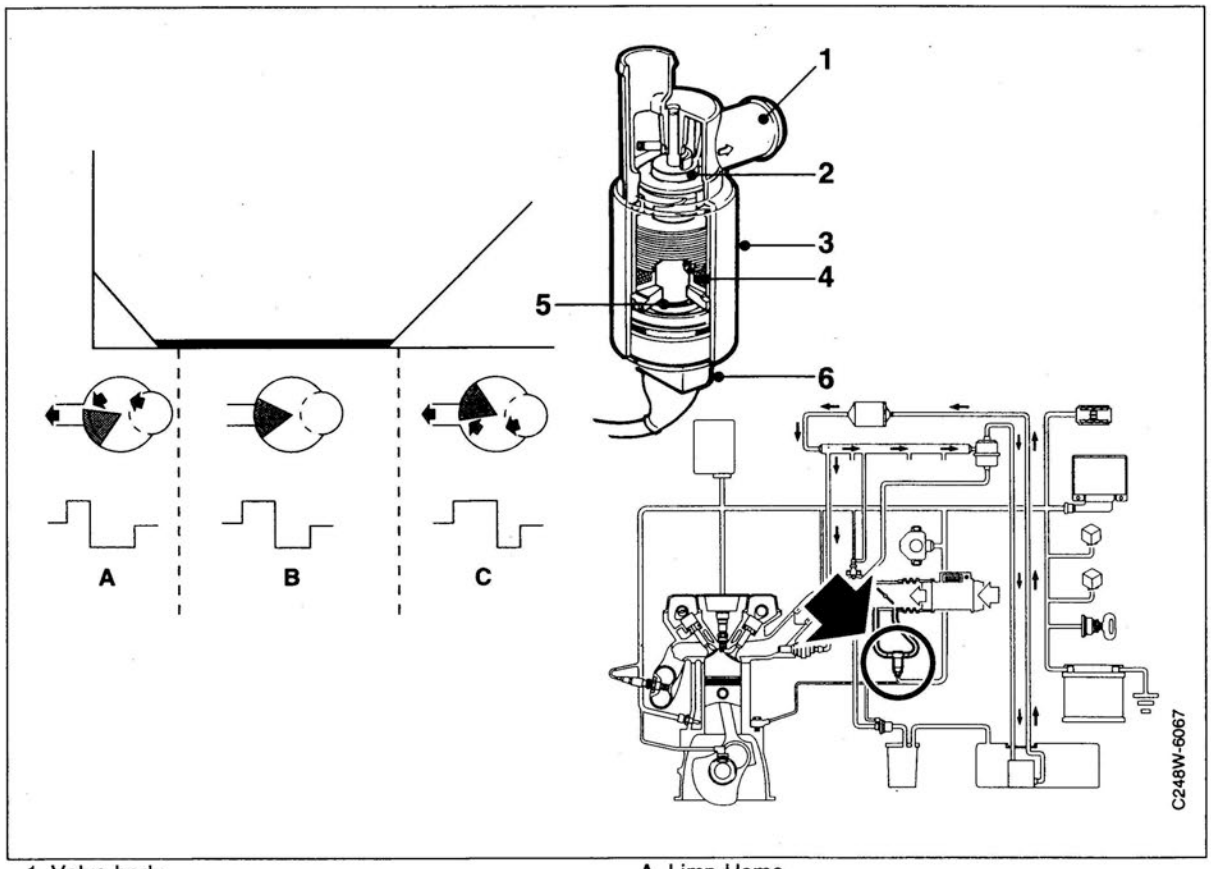

1 Valve body
2 Valve
3 Casing
4 Solenoid
5 Spring
6 Electrical connection

A. Limp Home
B. Closed
C. Normal operation

Description

This idle air control valve differs from the LH 2.2 valve in that the reversible motor is replaced by a solenoid. The coil (2) receives pulse signals from the control module. When activated, the coil overcomes a mechanical spring (5) that keeps the valve closed. This allows a specific volume of air to flow past the throttle butterfly in the intake manifold.

In the event of a fault, the opening pulses terminate and the spring (5) pulls the valve to the end position. The air flow through the valve in this position (Limp Home) is greater than during normal operating conditions. This gives an idle speed of 1,200 - 1,500 rpm.

The Limp Home function is activated when a fault arises in the IAC system, such as might be caused by a loose cable.

During deceleration when the throttle butterfly is fully closed (braking), the valve is controlled by the control module so that extra air can flow past the throttle butterfly. This is to ensure complete combustion of any injected fuel. This function replaces the dashpot function in the LH 2.2 system.

Idle speed control in the LH 2.4.1 system has been further improved. This has been achieved by the addition of vehicle speed information to the control module's calculations. The signal is obtained from the speedometer.

As long as the speed of the car exceeds about 6-8 km/h, engine speed will be higher than idle speed but will drop to idle speed when this speed limit is no longer reached.

As a result, braking to a standstill is extremely smooth.

Idle air control valve (IAC-valve), LH 2.4, 2.4.1 and 2.4.2, contd.

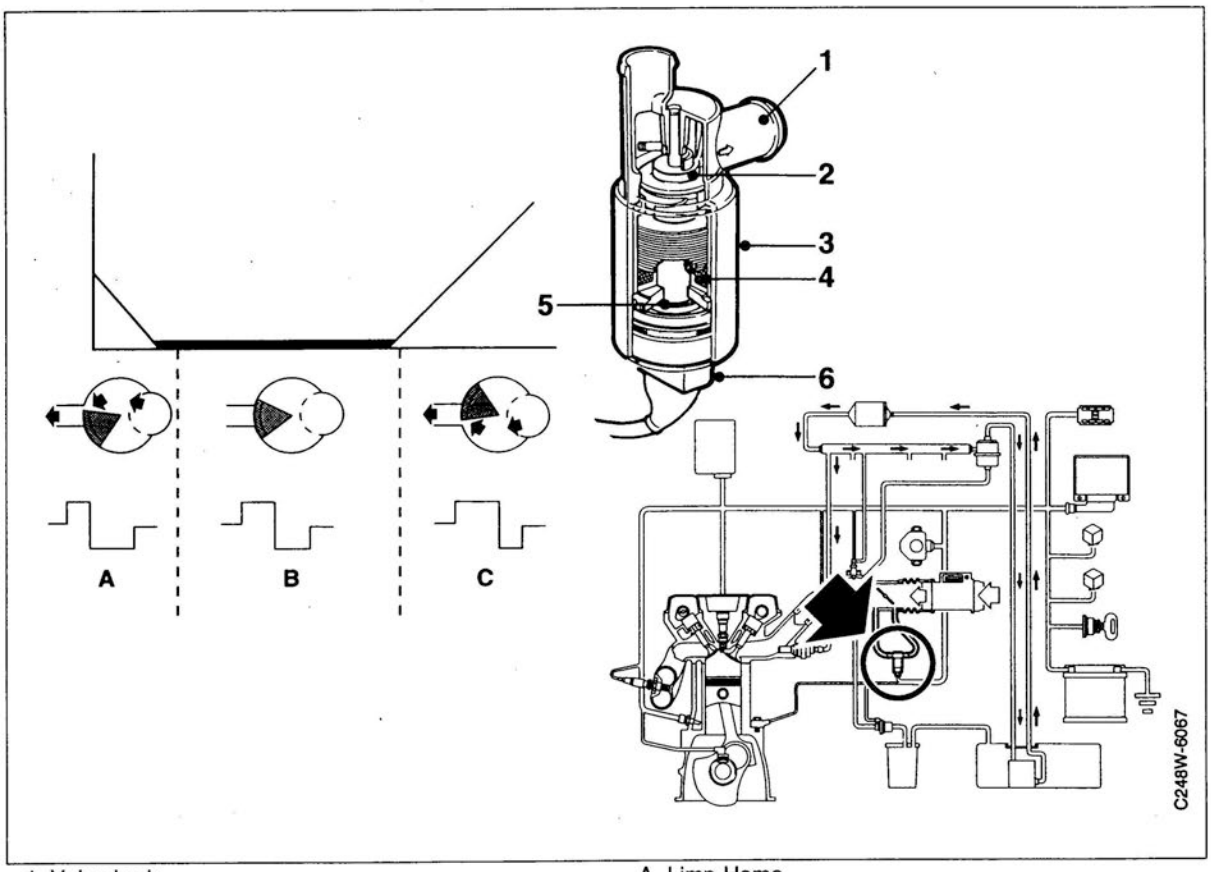

1 Valve body
2 Valve
3 Casing
4 Solenoid
5 Spring
6 Electrical connection

A. Limp Home
B. Closed
C.Normal operation

In the LH 2..4.2 system the idle air control valve has two windings and a reversible motor. The windings partially counteract each other so that a voltage drop, such as caused by engagement of AC, does not affect control. The two windings also make for faster control.

In the event of a fault, a spring sets the valve in the Limp Home position. This position results in an engine speed of about 850 rpm when the valve is not under load.

Adaptive idle air control system, LH 2.4, 2.4.1 and 2.4.2

In the adaptive (smart) idle air control system, adjustment/setting of idle speed takes place continuously and automatically compensates for all normal changes.

The microprocessor in the control module "remembers" the opening the IAC valve had the last time the engine was running at idle speed. This system reduces the need for service and the setting is maintained unchanged at a high level.

Evaporative emission canister

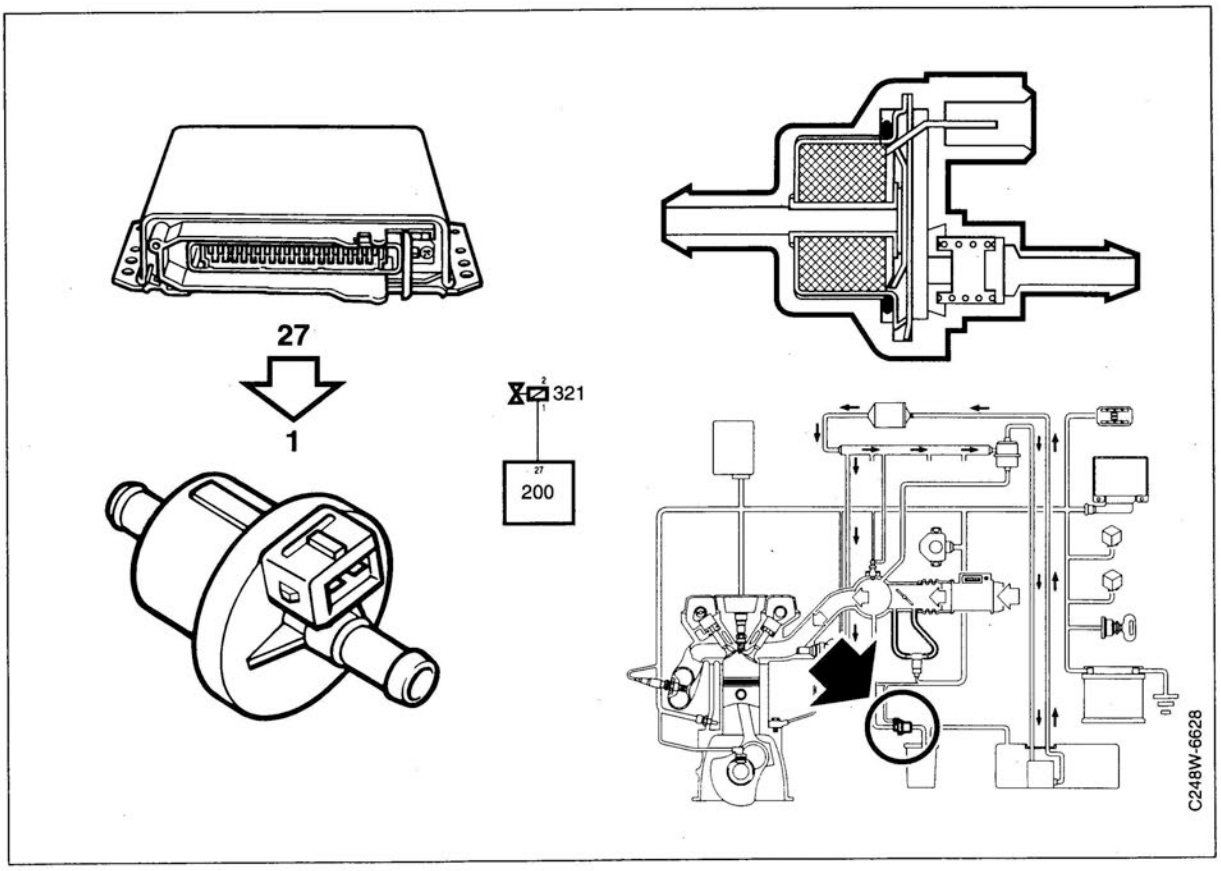

Description

Hydrocarbons from the fuel tank are trapped in a container filled with activated charcoal and stored there when the engine is stationary.

When the car is driven, the EVAP canister purge valve opens and the fuel fumes are sucked into the engine and burnt. There are two versions of the purge valve: a vacuum-controlled valve (M1985-1987) and a solenoid valve (M1988-). The vacuum-controlled valve is operated via a hose from the throttle body while the solenoid valve is operated by the control module.

The valve opens when the engine load is such that combustion of the additional fuel can take place. The hydrocarbons pass via a hose to the intake manifold where they are burnt together with the regular fuel-air mixture.

Cold-starting valve, 9000i cat. (LH 2.4)

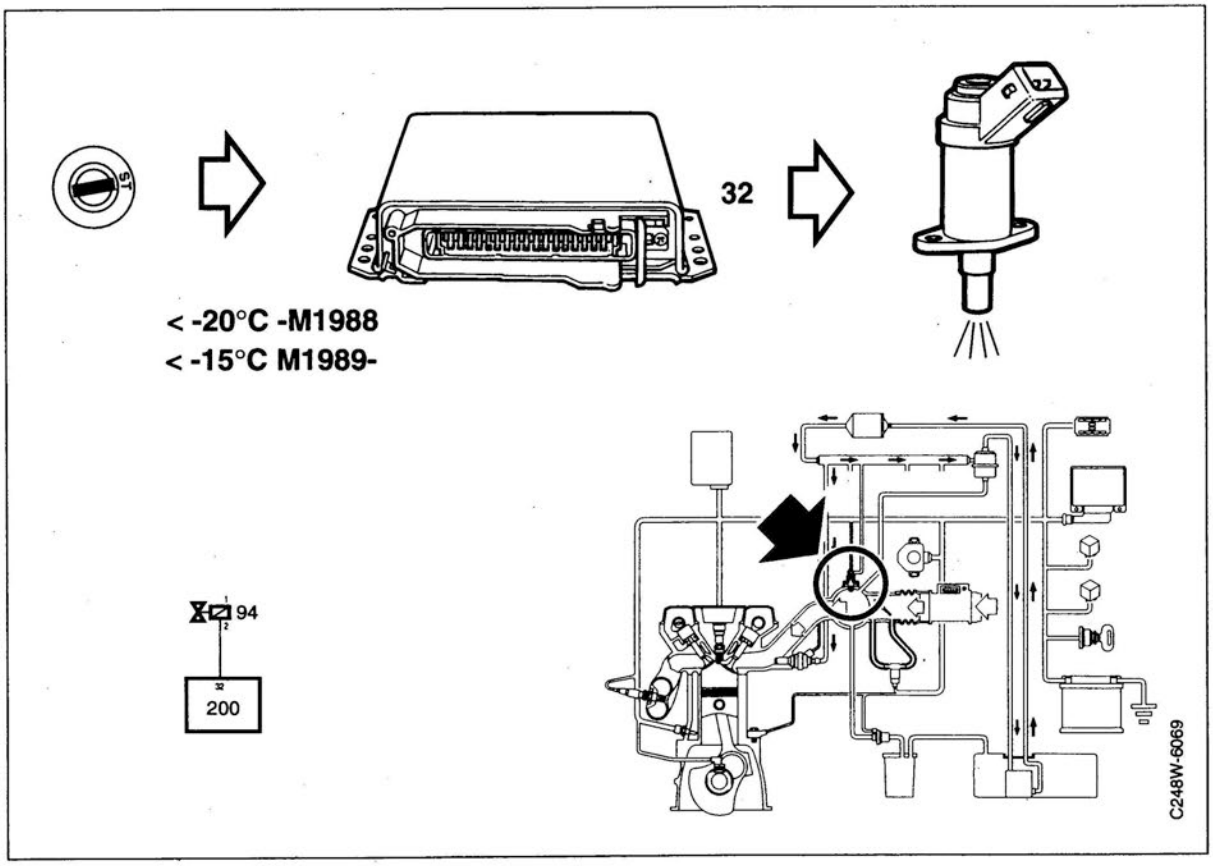

Description

To improve cold-starting performance still further, above all at temperatures below -25°C, the Saab 9000i with catalytic converter is equipped with a special cold-starting valve. This valve is mounted on the top of the intake manifold.

The cold-starting valve is actuated automatically by the control module while the engine is being turned over by the starter motor when the temperature sensor records a temperature below -20°C (M1988) or -15°C (M1989-). The valve then remains open for 80 ignition pulses (40 engine revolutions) and the opening duration of the injectors is reduced at the same time. If repeated attempts are made to start the engine, the cold-starting valve will remain closed to avoid flooding the engine.

For this function to be engaged, jumper lead 85 98 526 must be fitted in place. Control module pin 15 will then receive current from pin 9, which is the signal for operation of the cold-starting valve.

Engine starting

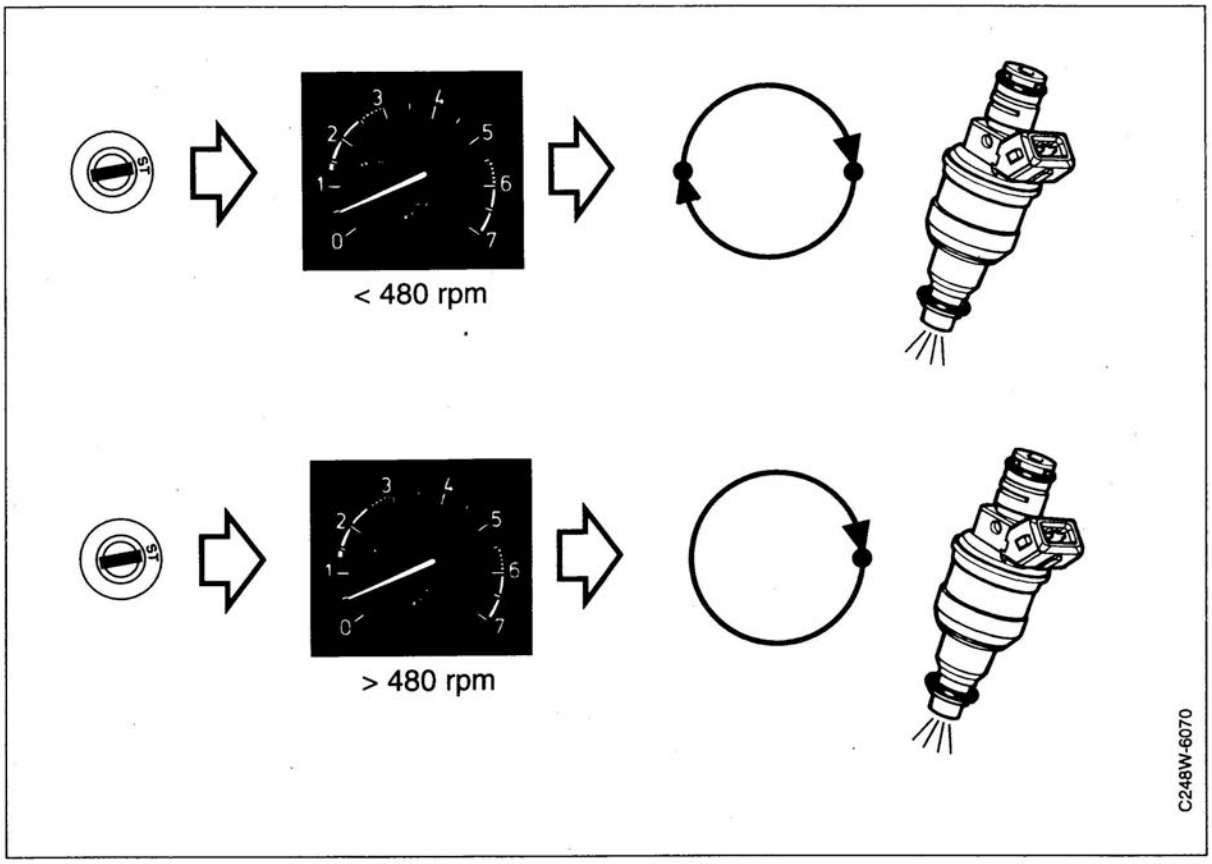

Description

When the engine is started, signals are sent to the injectors twice during each engine revolution. At temperatures down to -14°C, this continues until the engine reaches a speed of 480 rpm, at temperatures down to -40°C until it reaches a speed of 675 rpm, and at temperatures below -40°C until engine speed is 800 rpm. Above the engine speeds the injectors are activated once per engine revolution.

On cars equipped with the LH 2.4 system and a cold-starting valve, the control module sends signals to the injectors twice per engine revolution. However, the control module reduces the amount of fuel injected by the injectors.

A cold-starting kit consisting of a cold-starting valve, wiring harness and mounting components is available for particularly cold markets.

Warming up the engine

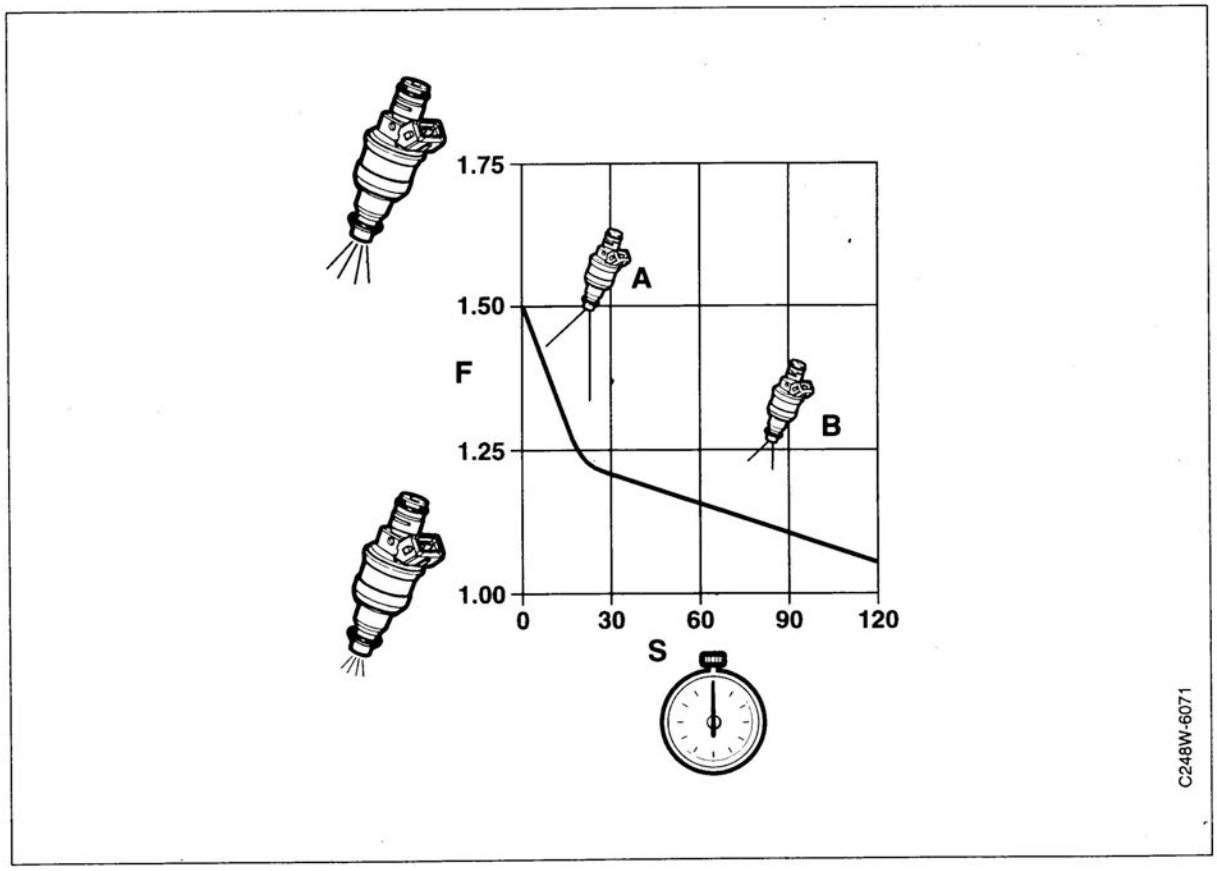

Description

The engine warm-up period consists of two stages. The fuel enrichment factor (F) is higher during the first 20 seconds of operating time (S). This means that the injector opening duration is longer in section (A) of the curve.

Fuel enrichment decreases after 20 seconds in that the injector opening duration is reduced, as shown by section (B) of the curve.

Safety factors

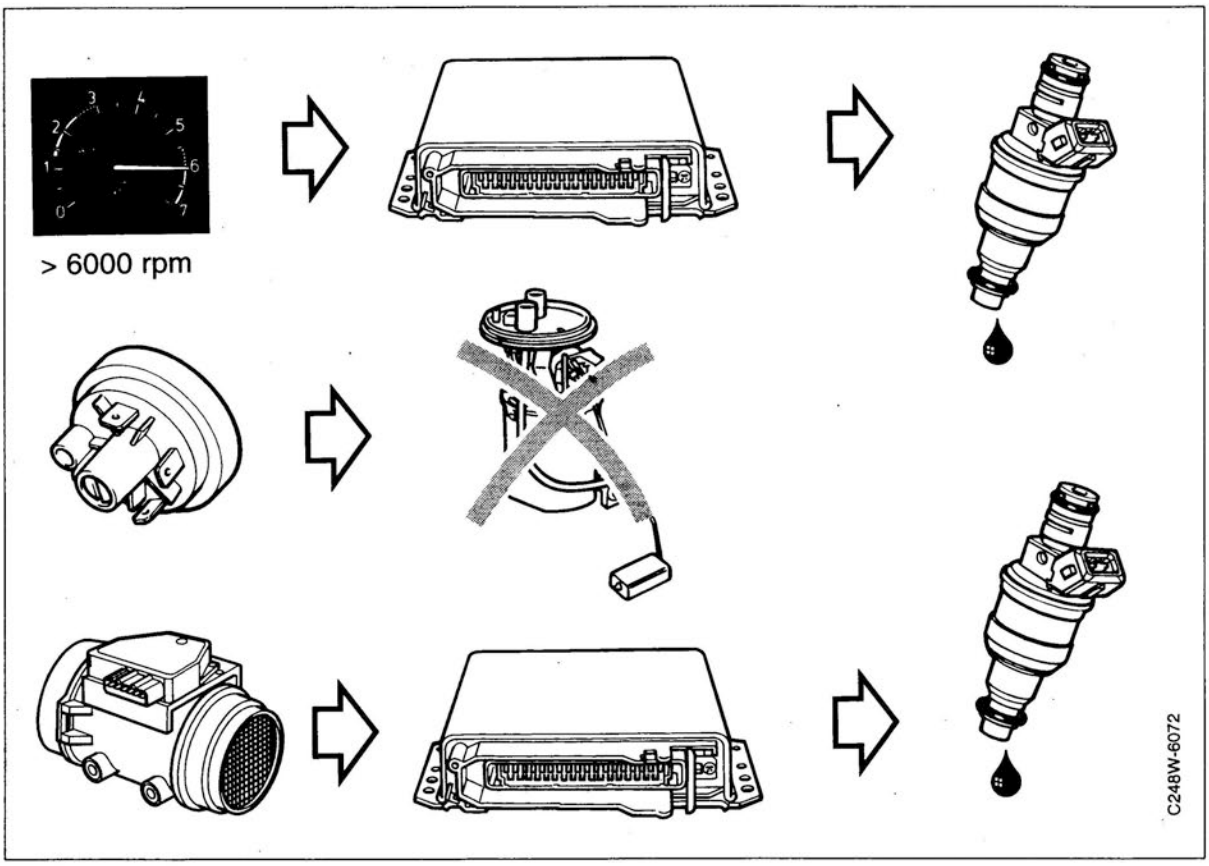

Description

The control module receives signals continuously from the ignition system and can calculate engine speed from them.

If engine speed exceeds 6,000 rpm the injectors are disconnected until engine speed drops. This is a safety measure to avoid damaging the engine.

To protect the turbo engine from excessively high boost pressure, a pressure switch is fitted on cars equipped with the LH 2.2 system. If boost pressure climbs too high, the pressure switch cuts off the fuel pump's power supply.

On cars equipped with the LH 2.4 or LH 2.4.2 system, similar protection is provided by means of the load signal which, if it exceeds a certain limit, cuts off the pulses to the injectors.

If no more ignition pulses are generated, the fuel pump will stop.

Limp Home mode

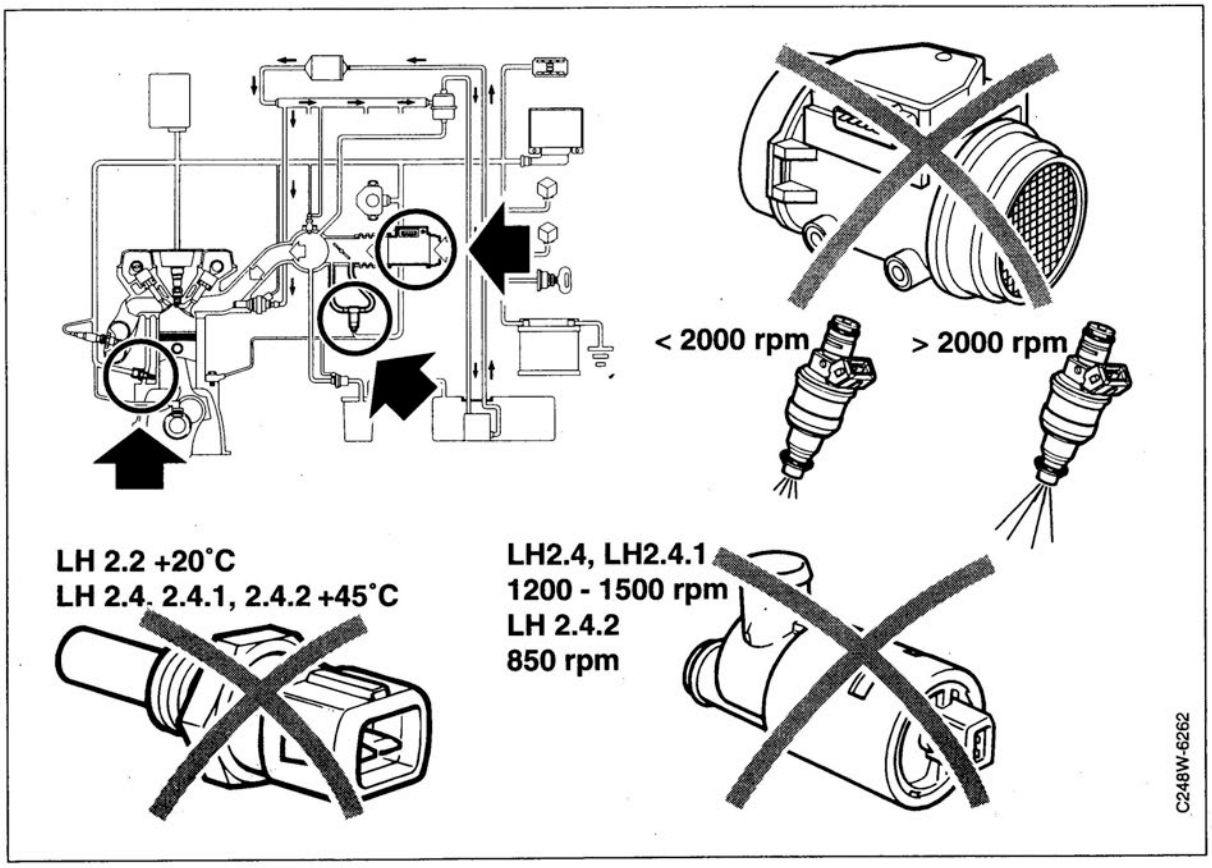

Description

In the event of component failure, a Limp Home function in the LH system will be activated which enables the car to be driven but with reduced performance.

In the event of a fault in the mass air flow sensor, no information will be available on which to calculate injector opening duration. The control module then resorts to two default opening duration settings, above or below 2,000 rpm.

In the event of fault in the temperature sensor or an open circuit in the electrical connection, the control module assumes a fixed default value, +45°C (+20°C for LH 2.2).

In the event of a fault in the idle air control valve it will open so that an engine speed of 1,200-1,500 rpm will be obtained (LH 2.4 and LH 2.4.1). In the LH 2.4.2 system the valve opens for an engine speed of 850 rpm.

Enrichment on PRE-IGNition (premature ignition, pinking)

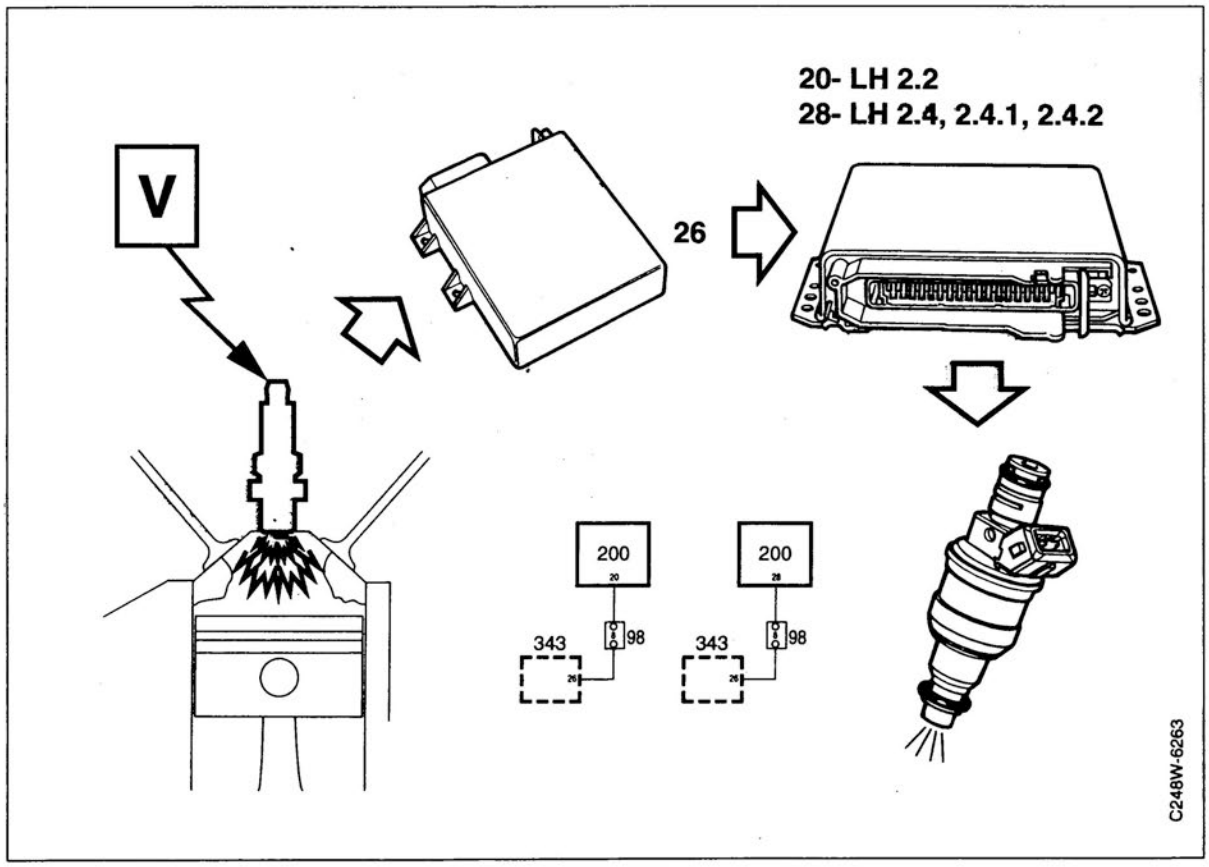

Description

Combustion in the engine is monitored continuously by the DI/APC control module. When the control module records pre-ignition in any of the cylinders, a signal is sent to the LH system's control module. This signal orders immediate fuel enrichment.

The signal from the DI/APC control module is applied to pin 20 (LH 2.2) and pin 28 (LH 2.4, 2.4.1 and 2.4.2).

Note: PRE-IGNition does not normally happen without being preceded by pinking. This means that adjustment of the timing and boost pressure takes place if pinking occurs. If PRE-IGNition occurs as well, enrichment of the fuel-air mixture will take place.

Useful tip

In certain cases this function has given rise to malfunctioning and may therefore be disconnected. On later model year cars this function is not provided.

Fuel shut-off

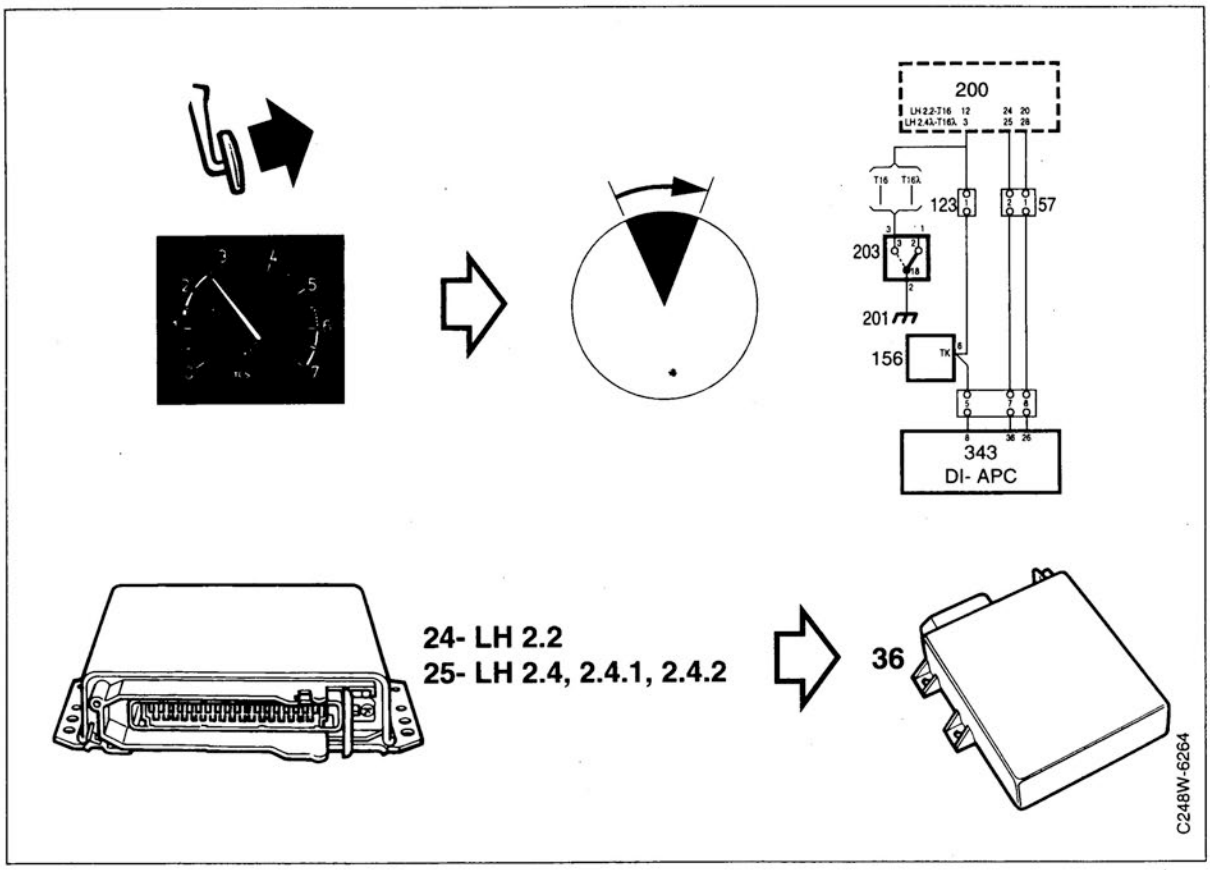

Load signal (tq), fuel shut-off

In the case of fuel shut-off (accelerator release), the signal from the LH control module to the DI/APC control module is interrupted. The control module then retards the ignition and the return will be smoother.

The signal is sent from LH control module pin 25 (pin 24 for LH 2.2) to DI/APC control module pin 36 or EZK control module pin 8.

Electronic EGR system

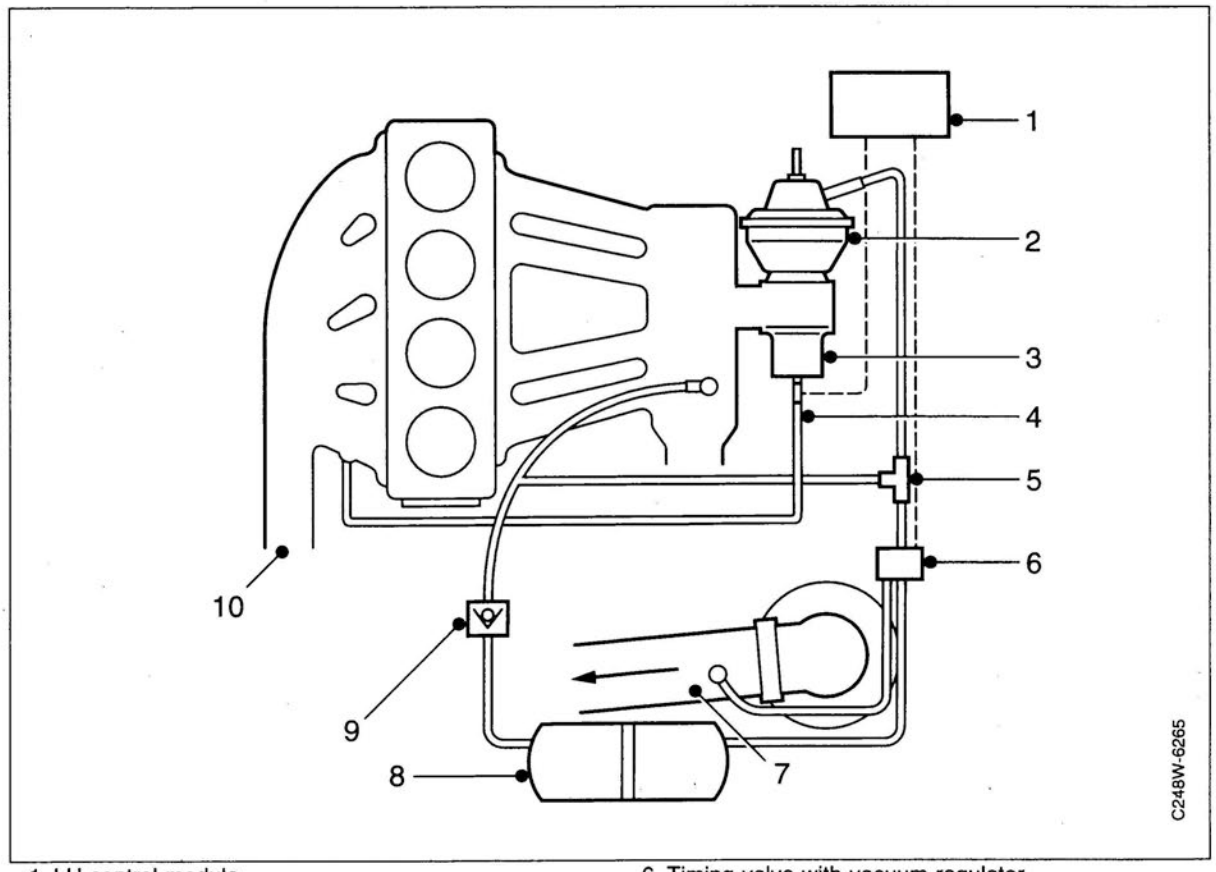

1 LH control module
2 EGR valve
3 Thermostatic switch
4 EGR pipe
5 Vacuum port
6 Timing valve with vacuum regulator
7 Turbo delivery pipe
8 Vacuum tank
9 Non-return valve
10 Exhaust manifold

General

To meet stricter legal requirements in California, an EGR system with electronic control was introduced for M1990. This EGR system is fitted only to model year 1990 cars.

The system consists of a timing valve with vacuum regulator, a vacuum tank with non-return valve and a thermostatic switch. The thermostatic switch supplies information to the LH control module which in its turn controls the timing valve. The timing valve applies varying control pressure to the EGR valve.

Light load

On the basis of information on load, engine speed and coolant temperature, the control module sends pulses to a timing valve by means of which the desired amount of exhaust gas is recirculated. The vacuum valve ensures that the vacuum in the system is maintained at about -200 mbar.

Acceleration

The LH control module actuates the timing valve in order to open the EGR valve, but the pressure in the intake manifold is decreasing to 0. This means that no vacuum is present and the EGR valve cannot be opened. For this reason a vacuum tank is incorporated in the system so that control pressure is available for 30-40 seconds.

Full load

The EGR valve should be kept closed but on engines equipped with a turbocharger the EGR valve's built-in springs are not strong enough to withstand the high pressure that is generated. As a result, turbocharged engines are fitted with a vacuum port which diverts the overpressure from the intake manifold to the diaphragm of the EGR valve. This overpressure helps to keep the EGR valve closed.

jxh

Fault diagnosis

Safety rules 54
Connection of exhaust extraction equipment 55
Colour codes, electric leads 55
Before starting fault diagnosis 56
Diagnostic methods 56
General testing methods 57
Before control module replacement 61
Handling control modules. 62
Fault diagnosis with an ISAT scan tool 63
Fault diagnosis with the integral self-diagnostics
LH 2.4, LH 2.4.1 and LH 2.4.2 systems 66
LH system tester. 76
Test readings, control module connections 78
Control module connections, LH 2.2 79
Control module connections, LH 2.4 and 2.4.1 81
Control module connections, LH 2.4.2 84
Adaptation 87
Diagnostic trouble code table. 88
Command codes. 90
Fault diagnosis 92
Fault diagnosis, systems/components 145
Fault symptoms 181

Safety rules

⚠ WARNING

When carrying out any work involving fuel, the fuel supply or fuel injection, make sure that the premises are well ventilated.

If approved extraction equipment for fuel vapour is available, use it.

Since prolonged contact with fuel may give rise to skin irritation, suitable gloves should be worn.

No smoking anywhere in the vicinity.

Always make sure that a suitable fire extinguisher is near at hand.

1 Never start the engine unless the battery is properly connected to the car's electrical system.
2 Never attempt to start the engine using an external power source, such as batteries connected in series (24 V) or a boost charger (16 V), with the battery connected to the car's electrical system.
3 If a boost charger is used, make sure that both battery cables are disconnected from the battery terminals.
4 Never disconnect the battery while the engine is running.
5 Make sure that all electrical connections make good contact.
6 Never unplug or plug in the control module connector with the ignition switched on.
7 Unplug the ignition system's output stage before carrying out a compression test.
8 At temperatures above +80°C (176°F) (stove enamelling/oven drying) the control module must be removed from the car.
9 Always remove the control module before starting any electric welding.
10 Take care never to make wrong electrical connections.

Connection of exhaust extraction equipment

When connecting exhaust extraction equipment to a car indoors, avoid excessive negative pressure in the exhaust system. This could affect the readings when measuring CO content, for instance.

If excessively powerful exhaust extraction equipment is connected to a turbocharged car, oil may escape through the seals in the turbo unit.

This will result in the sound-damping material in the exhaust system becoming saturated with oil, causing the car to trail blue smoke behind it for some considerable time afterwards.

Excessively powerful exhaust extraction can be avoided by using an exhaust hose with an open connection.

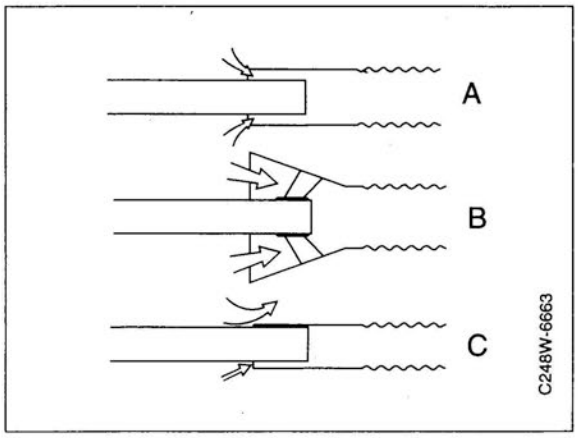

A Right
B Right
C Wrong

Colour codes, electric leads

The following colour codes are used in the service manual. Colour codes may be used singly or in various combinations, e.g. BL/RD, GL/VT, etc.

-M1990

BL	blue
BR	brown
GL	yellow
GN	green
GR	grey
OR	orange
RD	red
SV	black
VL	violet
VT	white

M1991-

Code	English	Swedish
BK	Black	Black
BN	Brown	Brown
BU	Blue	Blue
GN	Green	Green
GY	Grey	Grey
OG	Orange	Orange
RD	Red	Red
VT	Violet	Violet
WH	White	White
YE	Yellow	Yellow
PK	Pink	Pink

Before starting fault diagnosis

Sometimes the electronic systems are suspected of being faulty when in actual fact the engine or other auxiliary systems are at fault. Before starting fault diagnosis on the electronic systems, always remember to check the following points first:

- battery condition
- engine condition
- charging system
- other auxiliary systems
- cable connections
- grounding points

Apart from a thorough knowledge of the systems concerned, the availability of diagnostic equipment is essential for successful fault diagnosis.

Since the built-in self-diagnostic programs of the systems continuously monitor and record most of the faults that can arise, both persistent and intermittent, it is extremely easy with the diagnostic instrument to pinpoint the fault, remedy it and then check that the system is in proper working order.

Diagnostic methods

Fault diagnosis can be carried out in different ways. One and the same system can be analysed by using one or more diagnostic methods.

- ISAT scan tool
- Lamp-flash codes
- LH tester

To facilitate taking instrument readings, the test points on the different systems can be "broken out" by means of a Breakout Box (BOB). In such case, the Breakout Box is connected to the system's control module.

In connection with fault diagnosis

The words "Check the wiring from ... to ..." are used frequently in the fault diagnosis procedure described in the Service Manual for the respective system.

In certain cases the wiring includes connectors or distribution points and it is then understood that these should also be checked for continuity/ shorting.

Be alert to the possibility of interference from components that are connected to the wiring concerned.

Also check that the leads are not damaged or causing defective grounding. Always make absolutely sure that you are using the correct wiring diagram for the car, model year and type of system.

jxh

General testing methods

Test equipment

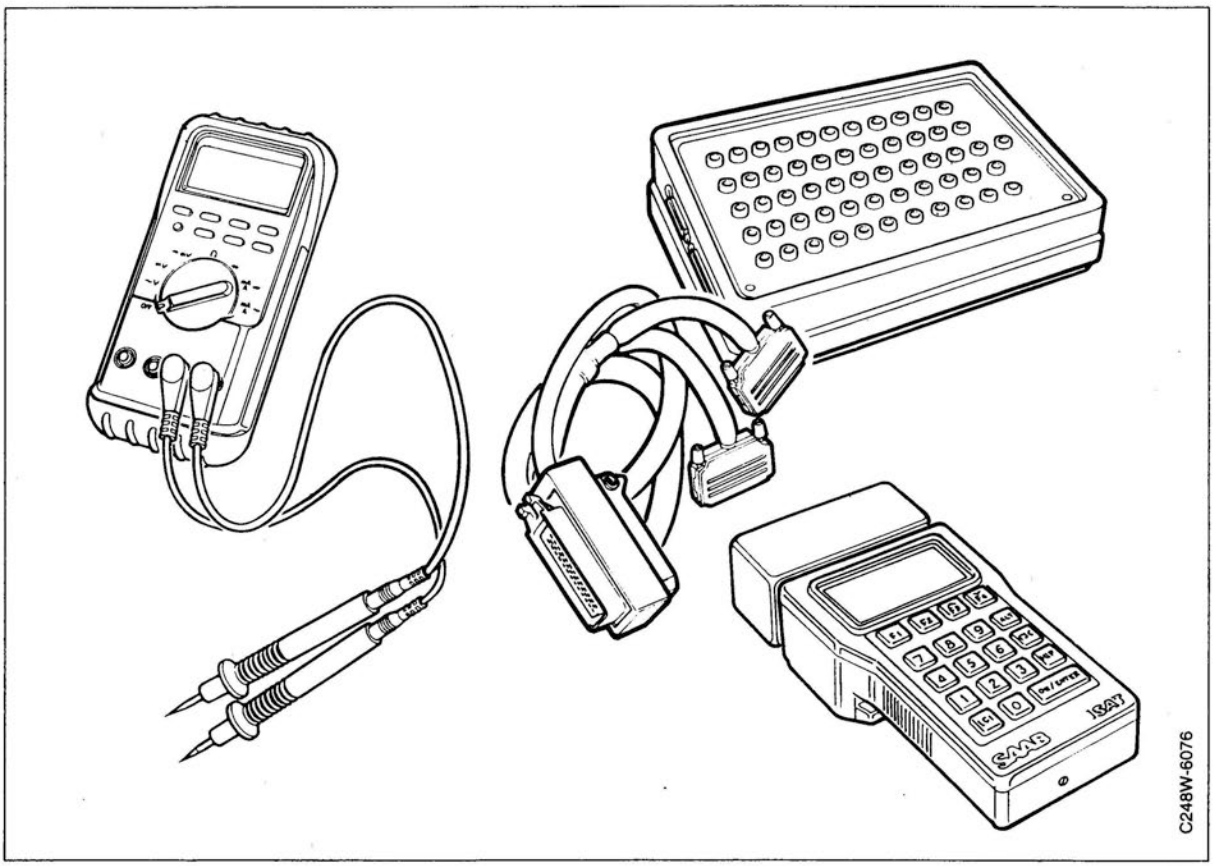

Suitable instruments for carrying out fault diagnosis on the car's electrical system are the ISAT scan tool and a multimeter (Fluke 88/97 or the equivalent).

Use a voltmeter (multimeter) to check the voltage in a circuit.

Take resistance readings when checking for short circuits and open circuits in wiring harnesses, connectors, switches and contacts.

Important

Exercise the utmost caution when taking resistance readings if the car battery is connected and one of the test points is ground or battery negative. Ordinary electrical equipment that is not disconnected could spoil and distort the test readings and easily lead to incorrect information.
Disconnection of the battery is **not** recommended, as many subsystems store information in memories which will be erased if their power supply is turned off.

General testing methods (contd.)

Checking for continuity/shorting

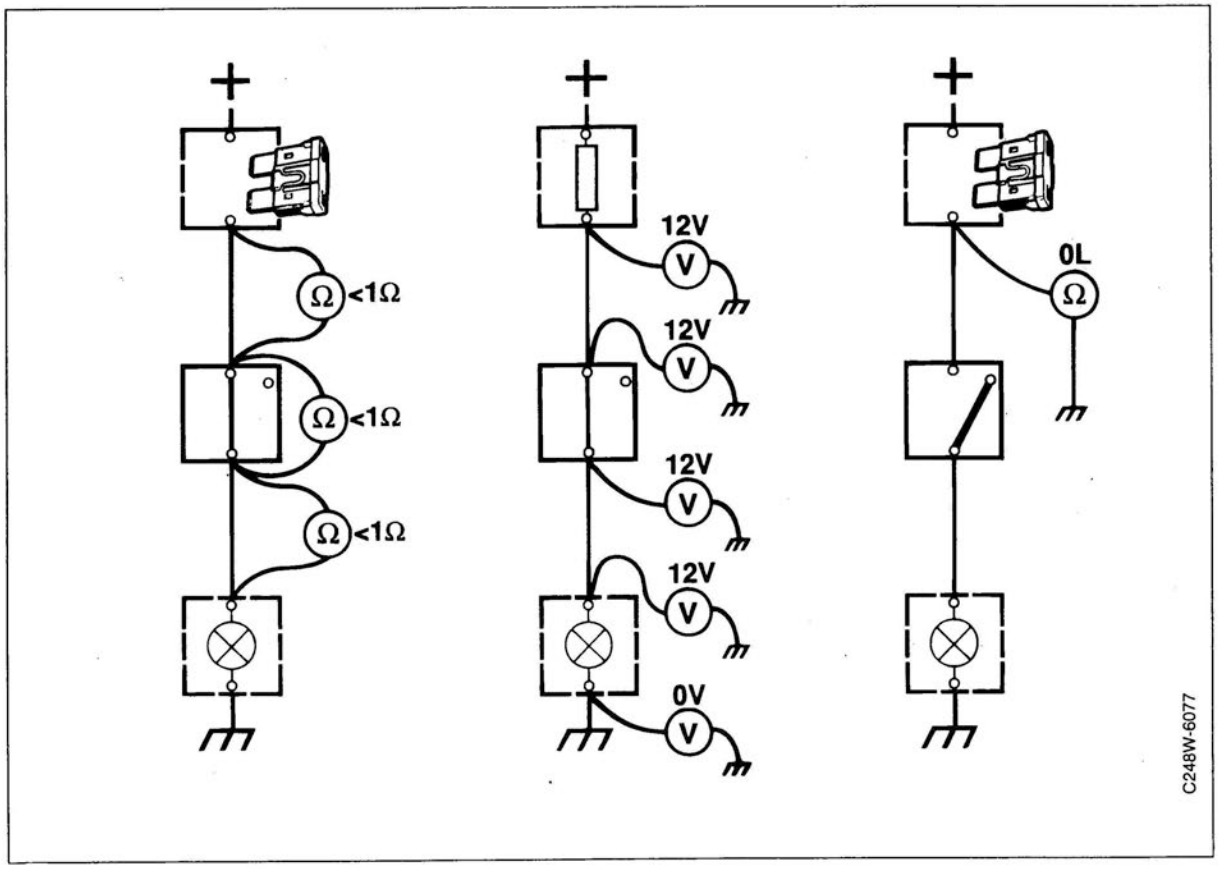

Open circuit (resistance measurement)

1 Make sure that the component or cable to be checked is not live.

2 With the instrument set to measure resistance, connect the test leads to each end of the component or cable to be checked.
In a wiring harness, the resistance should normally be less than 1 ohm. In regard to components, the specified resistance is applicable.

Open circuit (voltage measurement)

1 Switch on the load (item of electrical equipment), if any.

2 With the instrument set to measure voltage, connect the black test lead to a good ground and the red test lead to the wiring side.

3 At the output of a control module or switch, take readings in the direction away from them and proceed successively towards the load. When the voltage reading drops to zero, you have just passed the break in the circuit.

4 At the input of a control module or load, take readings in the direction away from the power source and proceed successively towards the control module or switch. When the voltage reading drops to zero you have just passed the break in the circuit.

Shorting to ground (resistance measurement)

1 Make sure that the cable to be checked is not live and that the load, if any, is disconnected.

2 With the instrument set to measure resistance, connect one of the test leads to the load side of the wiring harness and the other test lead to a good grounding point in the car.

3 Carefully move the wiring harness about while checking the instrument to see whether it shows infinite resistance (OL) the whole time.

General testing methods (contd.)

PWM signals

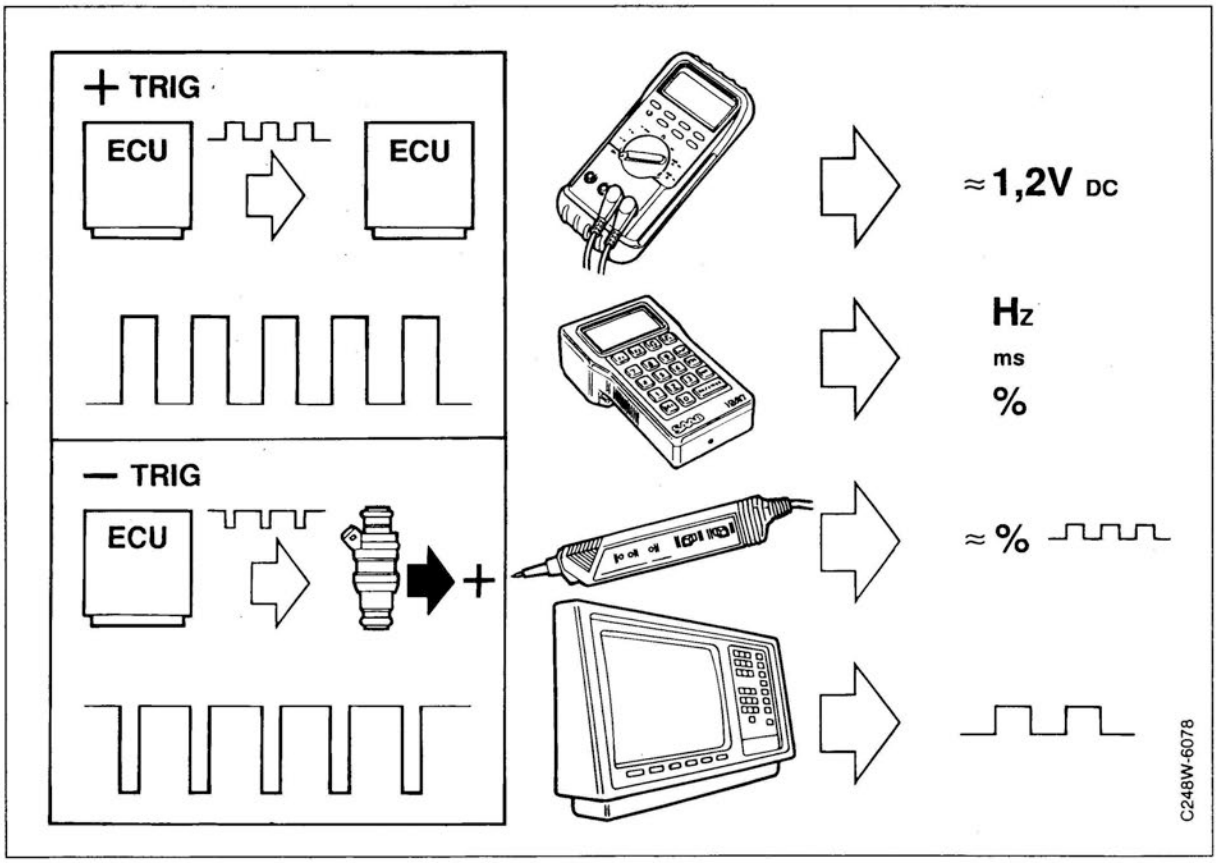

PWM measurement

PWM **signals** , i.e. communication **between** control modules, are always triggered by a positive pulse. That is to say, the pulse is a battery + (positive) pulse.

Other PWM outputs (inputs) are often triggered by a negative pulse. For instance, the injectors are supplied with constant positive voltage and pulsed by ground (negative) signals from the control module.

Measurement with a voltmeter

If we measure PWM with a voltmeter, the meter will show the mean voltage applied to the lead so that a higher pulse ratio will give rise to a higher mean voltage.

By means of the voltmeter we can roughly estimate the pulse ratio. At a pulse ratio of 9%, a reading of about 1.2 V (0.09 x 13 V = 1.17 V) will most often be obtained.

In the case of PWM triggered by a positive pulse, connect the red test lead to the cable and the black test lead to a good ground.

In the case of PWM triggered by a negative pulse, connect the black test lead to the cable and the red test lead to battery + (positive).

Select "Smooth" on the voltmeter if it has this feature.

Measurement with an ISAT scan tool or multimeter with a pulse measuring function

Connect the red test lead to the cable and the black test lead to a good ground. Then select positive or negative triggering. Frequency, pulse duration and pulse ratio can then be measured.

Measurement with Logic Probe

Connect the battery + (positive) power supply and a good ground. Then apply the tip of the probe to the cable. The Logic Probe shows whether pulses are present or not and gives a rough estimate of the pulse ratio.

Measurement with an oscilloscope

Pulse frequency and duration are shown at the same time as we see a display of the pulses. This shows us how pulse width changes when the input data is changed.

For further information on PWM signals, see Service Manual 3:2 "Electrical system, wiring diagrams".

General testing methods (contd.)

Points to remember when carrying out fault diagnosis

1 The SDA MkII should always be connected to ISAT scan tool.

2 The data link connectors (one green and one black, black for the engine management system) are located under the right-hand front seat.

3 Read and make a note of stored diagnostic trouble codes in all systems before disconnecting the battery and any control modules.

4 If communication cannot be established with the ISAT scan tool and control module, first check that the fuses are intact and live.
Then check the wiring between the control module and data link connector.

5 Also check that the power supply and correct ground are connected to the data link connector and that the connector pins are undamaged and securely located.

6 Diagnostic trouble code lists will be found in the relevant sections.

Important

Diagnostic trouble codes should be used only for diagnostic purposes. It is by no means certain that they indicate a component fault.

7 To avoid damage to control modules and components, make sure that the ignition switch is in the OFF position when connecting the Breakout Box (BOB) or unplugging connectors.

8 Check that the control module ground connections and supply voltages are correct.

9 It may sometimes be necessary to unplug connectors and check that sockets and pins are undamaged and securely located.
Plug in connectors again and clear all diagnostic trouble codes. If possible, start the engine and drive the car to check whether the fault or faults still persist.

If poor contact is suspected anywhere, use KONTAKT 61 contact cleaner (part No. 30 04 520) on the female pins (sockets) in the connectors.

Important

Contact cleaner or grease must not be used on the oxygen sensor connectors.

10 Where specified, 12 V is to be regarded only as a guide level, not an absolute value. The test reading may be directly proportional to battery voltage but 0.5-1.5 V may be lost due to an internal voltage drop in the driver stage of the control module.

11 Where specified, 0 V is to be regarded only as a guide level, not an absolute value. Due to an internal voltage drop in the driver stage of the control module, a voltmeter connected across the control module pins and ground could give a reading of about 0.5-1.5 V, but this is specified in Test readings, control module connections to 0 V.

12 Never switch from one unit of measurement to another (e.g. from V, via A to ohms) on the test instrument without first disconnecting the instrument's test leads.

13 Resistance measurement should always be carried out with the ignition switch in the OFF position.

Important

When you have finished checking, always clear the fault memory with the command "CLEAR FAULT CODES". To clear all systems, enter the command "CLEAR".

Before control module replacement

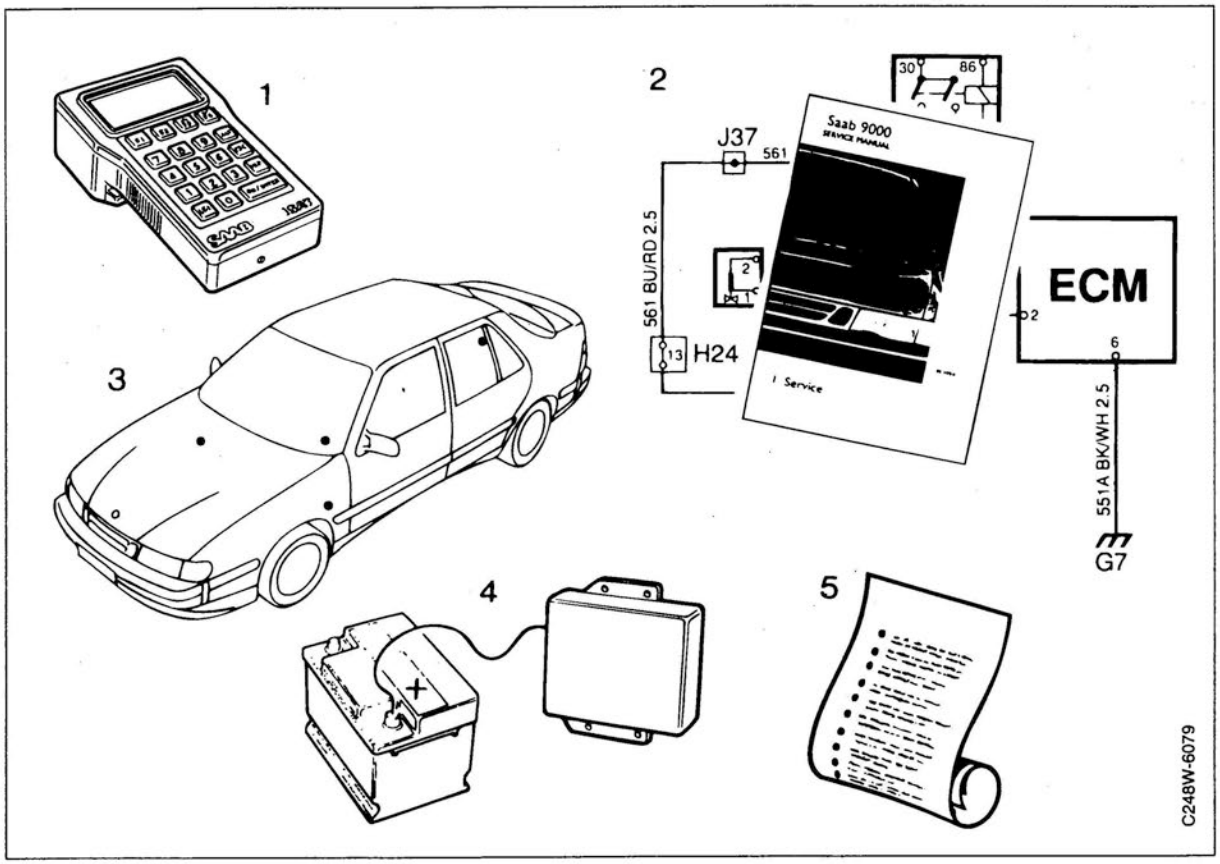

When all tests have been carried out according to the relevant diagnostics procedure or by manual fault diagnosis without any faults having been found, it is natural to assume that the control module is at fault.

Therefore, go through the following points carefully before definitely pinpointing the LH control module as the cause of the fault.

1 Check once again that every single point in the fault diagnosis procedure for the relevant diagnostic trouble code has been carried out.

2 Study the wiring diagram of the circuit in question and make sure you understand how it works. Relevant parts of the technical description and the electrical principles of operation in Service Manual 3:2 "Electrical system, wiring diagrams" may be of assistance in this respect.

3 Check all grounding points. If you have already done so, do it once again. Check that power ground and sensor are mechanically and electrically separate.

4 Check the power supply for the control module.

5 Check the input and output signals and compare the readings with the tables for the LH system in question.

6 Be restrictive with control module replacement. Unnecessary control module replacement represents a major expense for the customer or Saab Automobile and its dealers. Think of every possible cause of the fault before changing the control module.

7 If the fault still persists, the LH control module will have to be changed.

Handling control modules

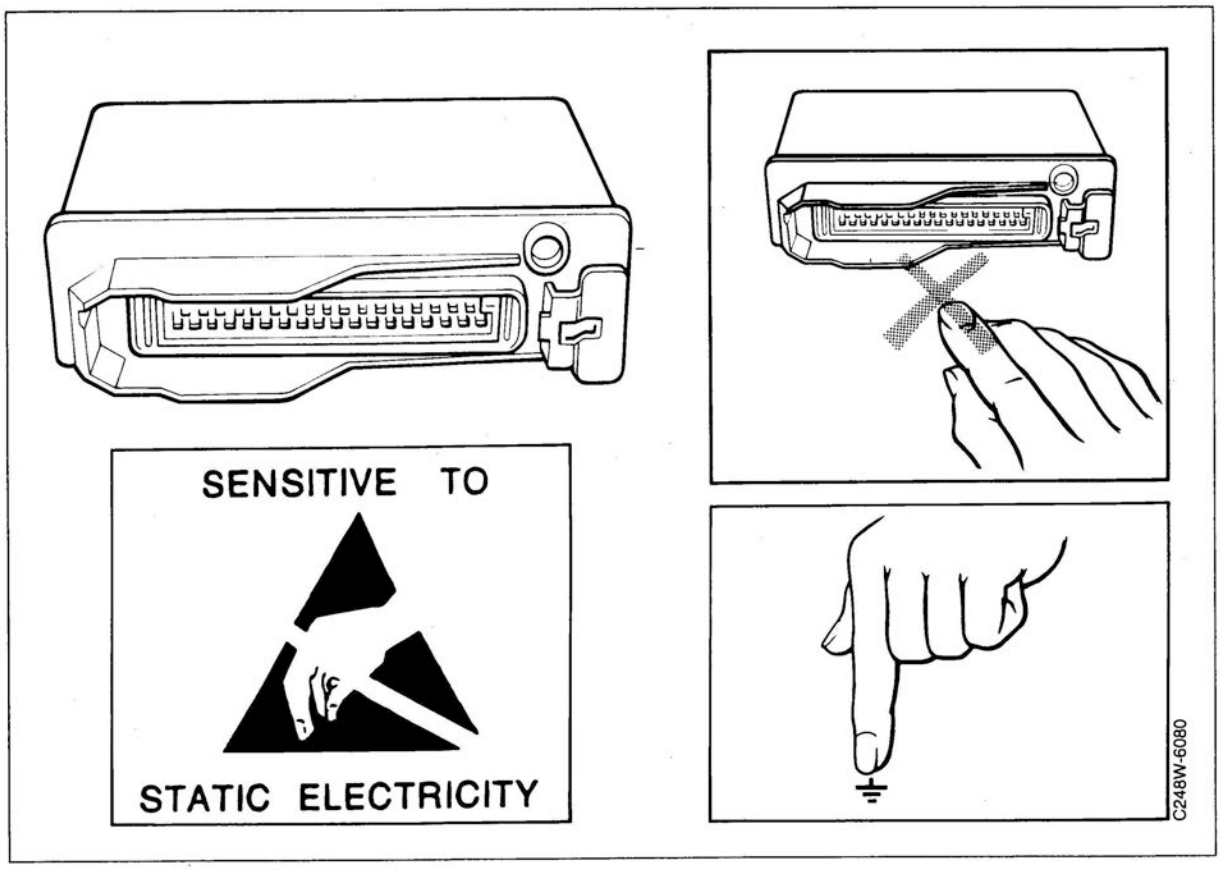

All control modules are more or less sensitive to static electricity and, if handled carelessly or incorrectly, may be damaged so seriously that they no longer work properly. It is therefore important to ensure that the following rules are observed in all connections and at all times when a control module has to be removed or replaced for any reason.

- Avoid unplugging or removing a control module unless absolutely necessary.
- Never touch the connector pin and never place the control module in such a way that the connector pins could come into contact with foreign objects.
- Before unpacking a new control module, ground the packaging to the car body and open it as shortly as possible before installing the control module in the car.
- Avoid wearing clothes made of synthetic (man-made) fibres and shoes with insulating rubber soles.
- When handling or working on control modules it is important to ground yourself from time to time. This is particularly important when you have been sitting in the car, when changing your position, or when moving round the car. It is even more important in a climate with extremely dry air (e.g. during the winter in cold markets).
- Furthermore, always handle control modules that are suspected of being faulty in the same way. This will greatly improve the chances of determining the cause of the fault.

Fault diagnosis with an ISAT scan tool

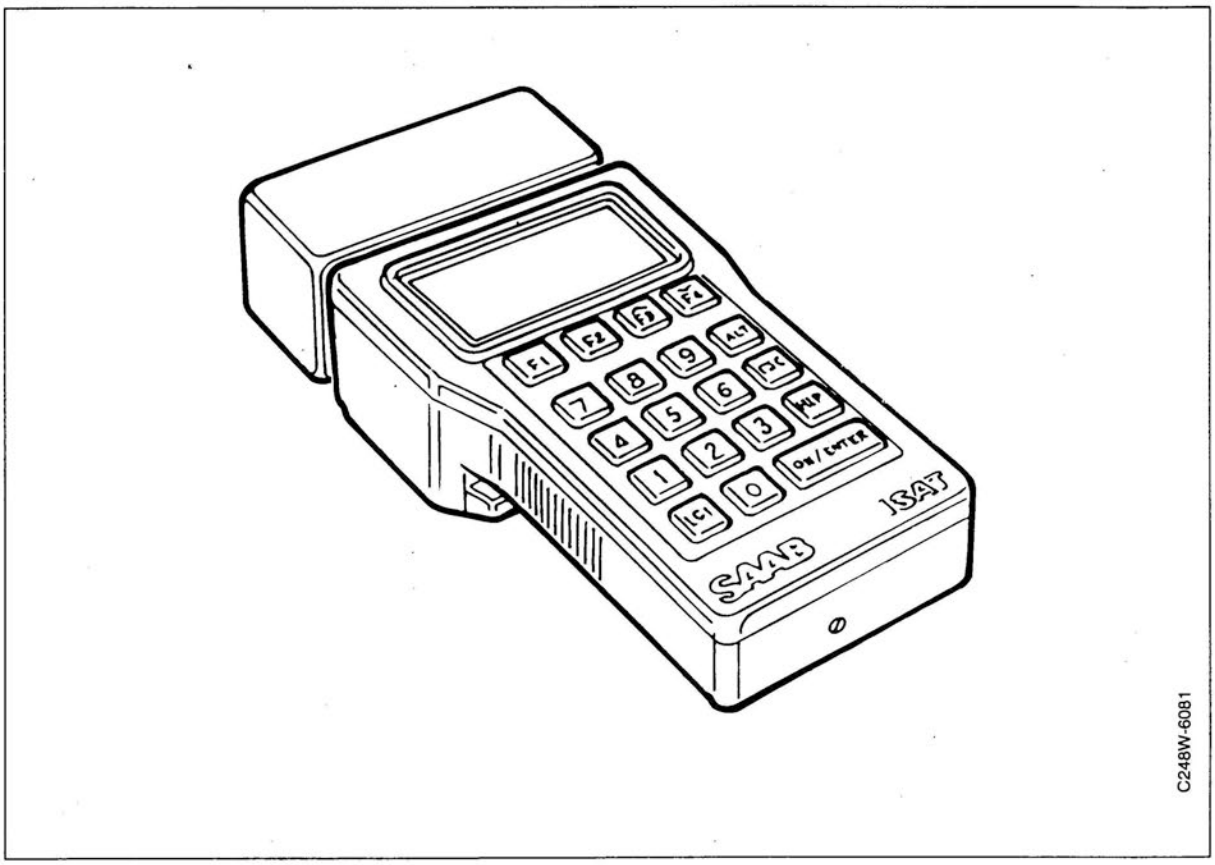

The ISAT (Intelligent **SA**ab **T**ester) scan tool is primarily designed for fault diagnosis in electronic systems incorporating self-diagnosis, such as the Saab DI, LH, TCS, EDU, ACC 2 and others. In systems of this type, faults (including intermittent ones) are diagnosed and stored in the system's control module (EDU). By means of the ISAT scan tool, the system's stored fault information can be retrieved and the fault presented in the form of a five-digit code on the ISAT scan tool's display.

For information on the operation and use of the instrument, see Service Manual 1:4 "ISAT".

Fault diagnosis with an ISAT scan tool (contd.)

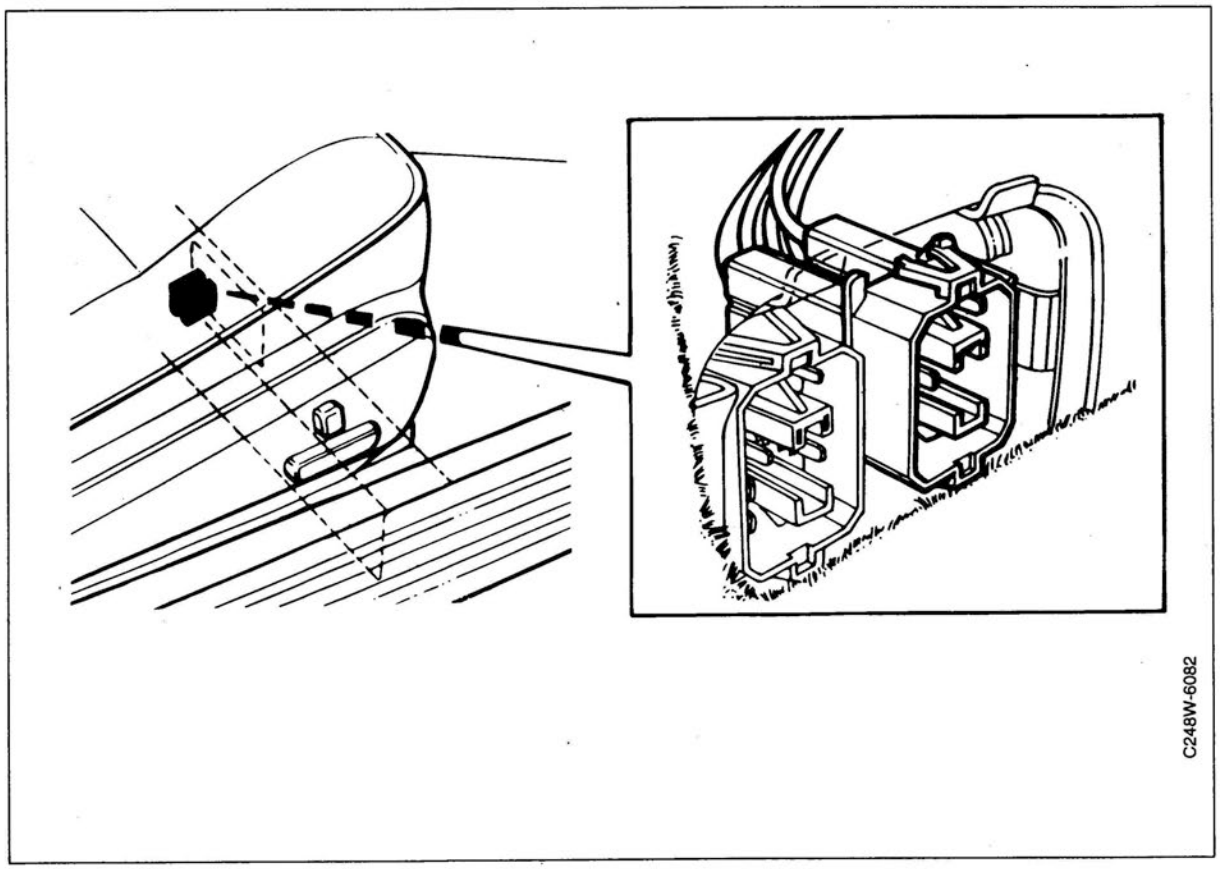

Data link connector

Fault diagnosis in the LH system is performed via the black data link connector.

- Black (347)
- Green (348)

Pin	System (Black)
1	K lead
2	LH/EZK/LUCAS (L lead)
3	DI/APC (L lead)
4	ETS (L lead)
5	Not used
6	Not used
7	Not used
8	Not used
9	B+
10	Ground

Fault diagnosis with an ISAT scan tool (contd.)

ISAT scan tool points to remember

Static electricity, ESD

See the "Handling control modules" section. This applies in the highest degree also to the ISAT scan tool and especially the replacement of the ISAT scan tool's memory module.

An electrostatic discharge against the ISAT scan tool's display could ruin it.

Connection

Plugging the ISAT scan tool into the data link connector and unplugging it **must be done with the ignition switch in the OFF position** .

Communication connection

On completion of diagnosis, when communication between the selected system and the ISAT scan tool is to be terminated, the command "END" is recommended.

ISAT scan tool program crashing

When using the ISAT scan tool it may happen that the program crashes and the display either freezes or goes completely blank.

The reason for this is a bug in the ISAT scan tool's internal software. Pressing keys does not help and the only way to restore the ISAT scan tool's program is to disconnect its internal battery.

Important

An incorrect or flat battery may upset communication between the car and the ISAT scan tool.

---

jxh

Fault diagnosis with the integral self-diagnostics LH 2.4, LH 2.4.1 and LH 2.4.2 systems

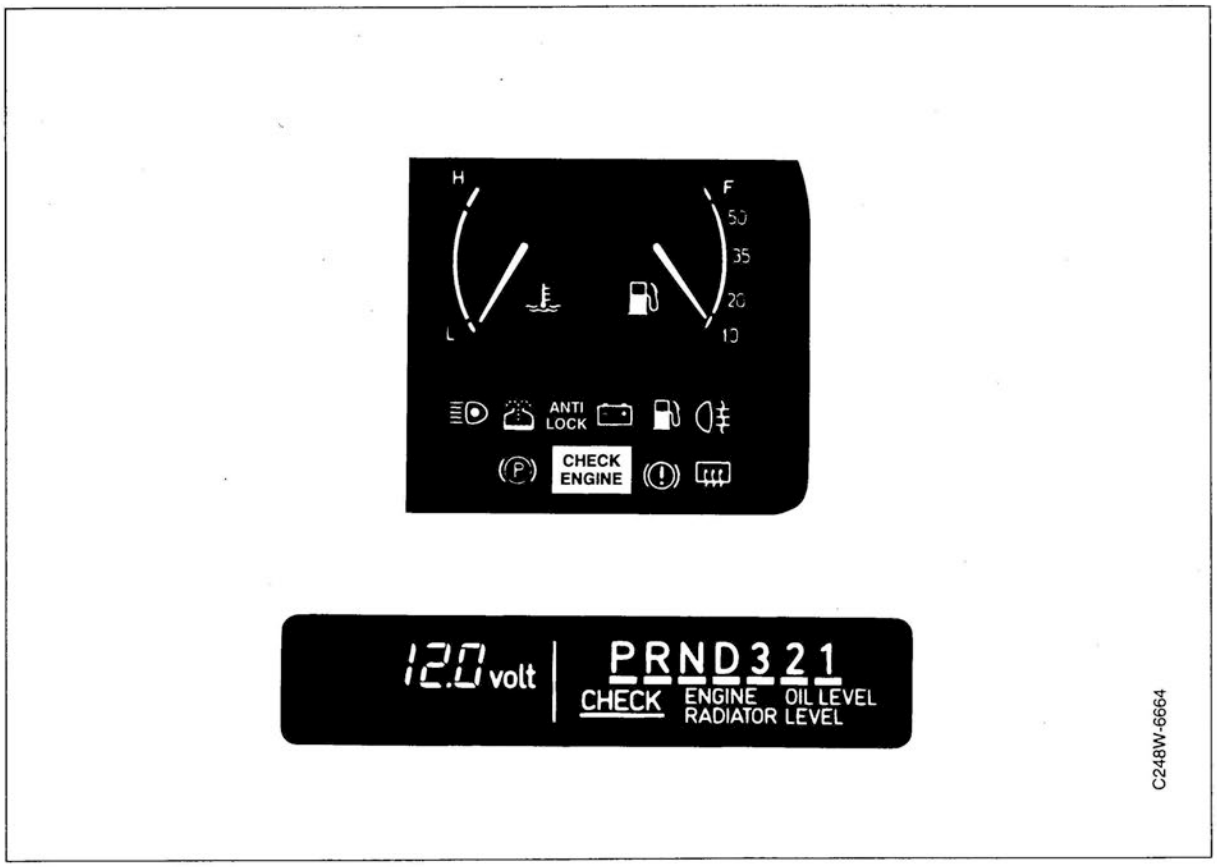

The self-diagnostics systems have two main applications:

- Fault diagnosis, stored faults
- Component and signal testing

Important

-M1989: Only the "CHECK ENGINE" lamp (MIL) in the main instrument display panel is used for reading faults.

M1990-: The "CHECK ENGINE" lamp (MIL) in the EDU is used for reading faults (not cars without EDU).

Stored faults

Faults which occur intermittently are often hard to find. The LH 2.4 has an integral memory with which it is possible to pinpoint such a fault later on and rectify it.

By following the instructions below, which describe how to activate the system's memory function, the "CHECK ENGINE" lamp (MIL) in the car's main instrument display panel will provide information on stored faults in the form of flashes (lamp-flash codes).

A certain combination of short flashes, e.g. 1+2+3+2+2, stands for a particular fault. You then consult a fault code list to find out what the fault code 12322 means and rectify the fault. Similarly, fault codes for fault No. 2 and fault No. 3 can be activated and from the flashes of the "CHECK ENGINE" lamp (MIL) the code can be interpreted in the fault code list.

Up to three faults can be stored in the control module's memory. In connection with fault diagnosis they can be activated to provide information about the nature of the fault. Serious faults are given priority, which in practice means that they must be rectified before the control module stores any less serious faults.

Important

If a serious fault develops repeatedly it will be recorded in the memory each time it occurs and cause the "CHECK ENGINE" lamp (MIL) to light up. When the fault has been rectified it may be necessary to clear the memory so that the fault code will "disappear". In doubtful cases you should always take the car out on test.

Component and signal testing

It is a good idea to carry out these tests in conjunction with "Fault diagnosis, stored faults".

Testing includes checking the operation of certain key components in the LH system and checking important control module signals.

In these tests the "CHECK ENGINE" lamp (MIL) will also flash codes with the same structure as those for stored faults. However, in this case the code is not a fault code but an identification code which indicates the component or signal that is being tested.

For example, if the "CHECK ENGINE" lamp (MIL) flashes the code 12413, the table for component and signal testing shows that the EVAP canister purge valve is being tested. The noise made by the valve opening and closing should be heard at the same time.

Important

All code flashing and testing will come to an end when the ignition switch is turned to the OFF position.

jxh

Fault diagnosis, stored faults

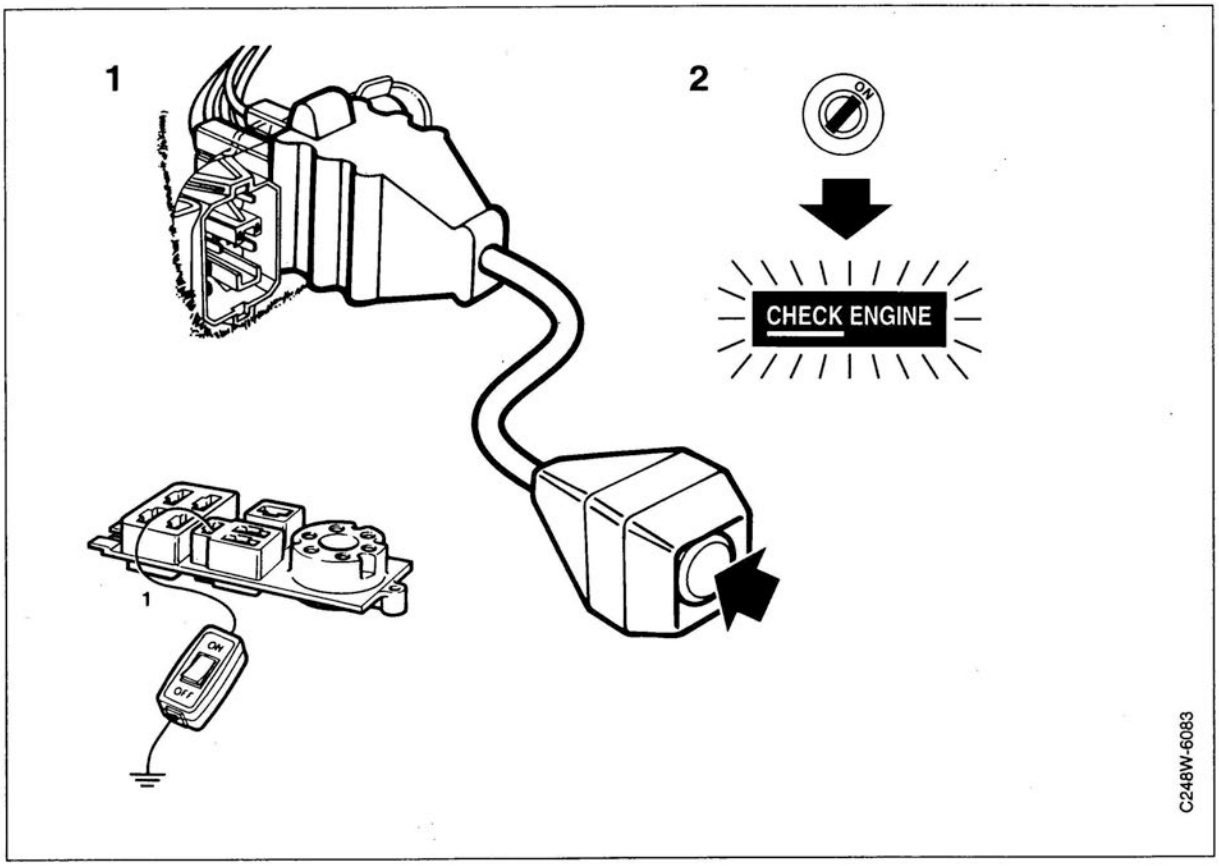

Important

Read all through the starting sequence before turning the ignition switch to the ON position.

1 Ground pin 1 in the three-pin test socket on the left-hand side of the engine bay. Connect the cable with switch, part No. 83 93 886 (-M1992), or cable 83 94 504 to the ISAT scan tool's black diagnostic socket (M1989-92).
M1993: Use only the ISAT scan tool's black diagnostic socket.

2 Use the "CHECK ENGINE" lamp (MIL) for reading the fault codes.
Turn the ignition switch to the ON position.
The "CHECK ENGINE" lamp (MIL) will light up.

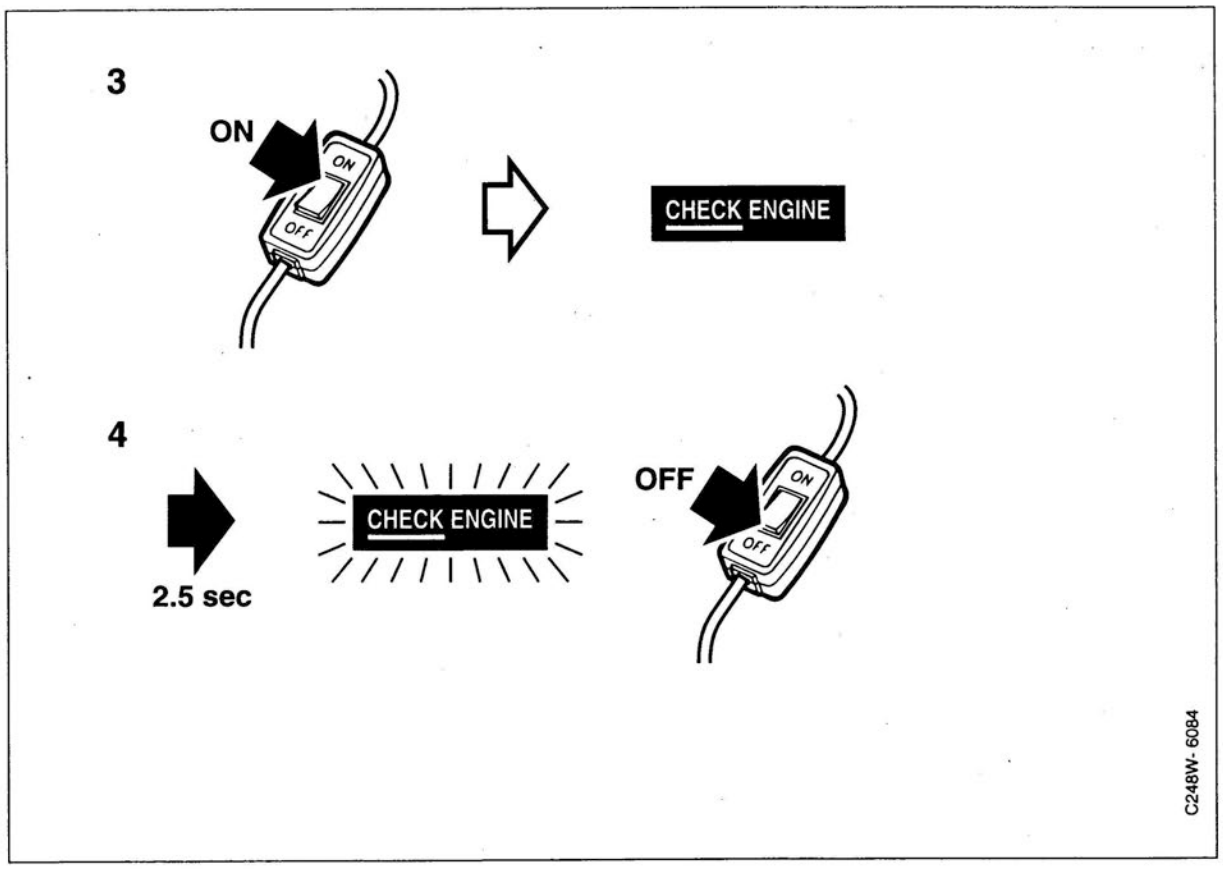

3 Set the switch to the "ON" position (grounding pin 16 of the control module).
M1990-: Wait until "CHECK OIL LEVEL" and "CHECK RADIATOR LEVEL" have gone out.
The "CHECK ENGINE" lamp (MIL) will go out.

4 Now carefully observe the "CHECK ENGINE" lamp (MIL). After about 2.5 seconds it will **flash briefly** , which means that the first fault code has been activated.
Set the switch to the "OFF" position immediately after the lamp flash.

5 The first fault code (of three possible) is now activated and immediately after the activation signal it will be signalled in the form of short flashes of the "CHECK ENGINE" lamp (MIL).

Important

The fault code begins and ends with a long flash of the "CHECK ENGINE" lamp (MIL). These long flashes have nothing to do with the fault code itself but serve only as signals to indicate the beginning and end of the code.

Fault code

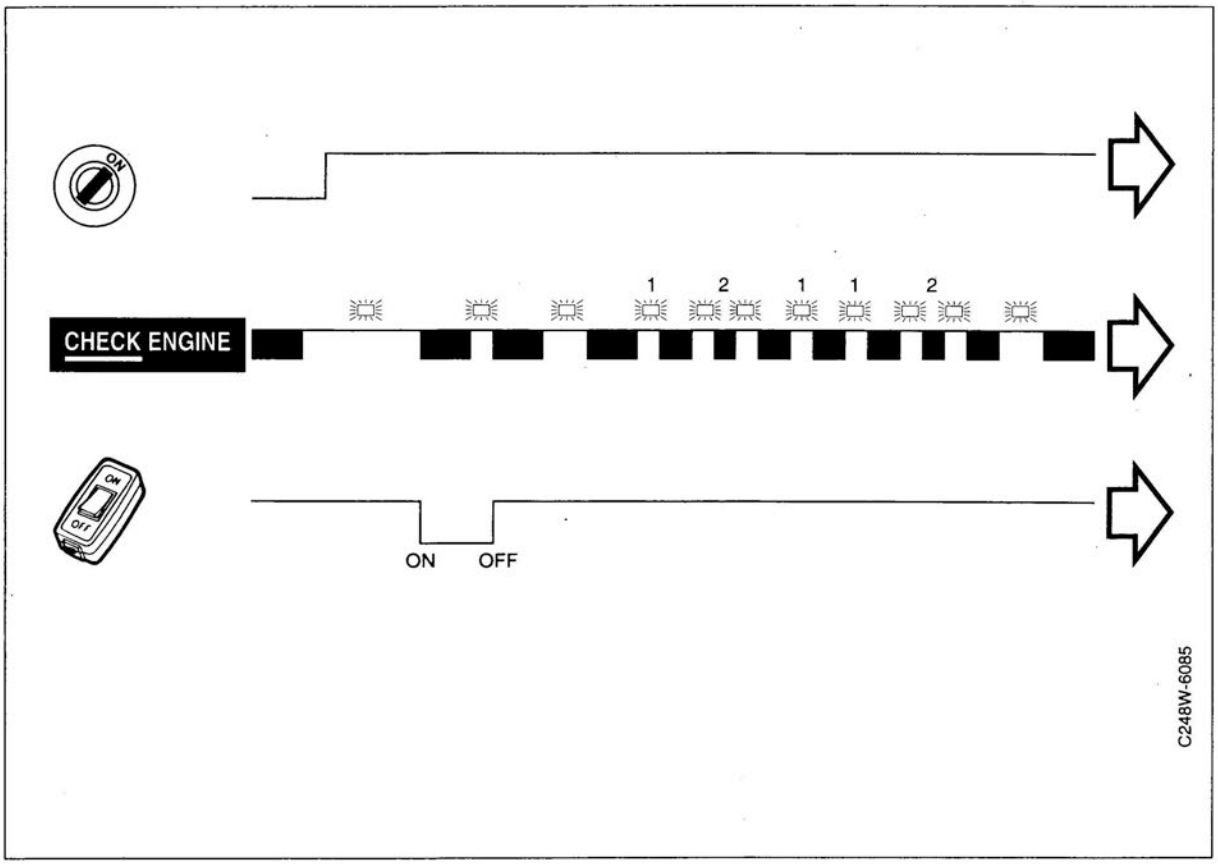

The entire sequence from beginning to end will then look like the diagrammatic representation in the illustration.

Accordingly, the fault code is 12112. The fault code table shows that this means that the fuel-air mixture at idle speed is incorrect.

With the switch in the "OFF" position the next fault code, if any, in the memory of the control module will not be activated. Instead, fault code 12112 will be flashed again and again endlessly.

Important

If the engine is switched off during testing, fault code 12231 will be obtained as the first fault, i.e. rpm signal absent. Run the starter motor for about 5 seconds. If the fault code disappears the ignition signal is OK and the fault is of another kind.

As soon as acknowledgment has been received, allow the ignition switch to return to the Drive position and continue testing.

Next fault code

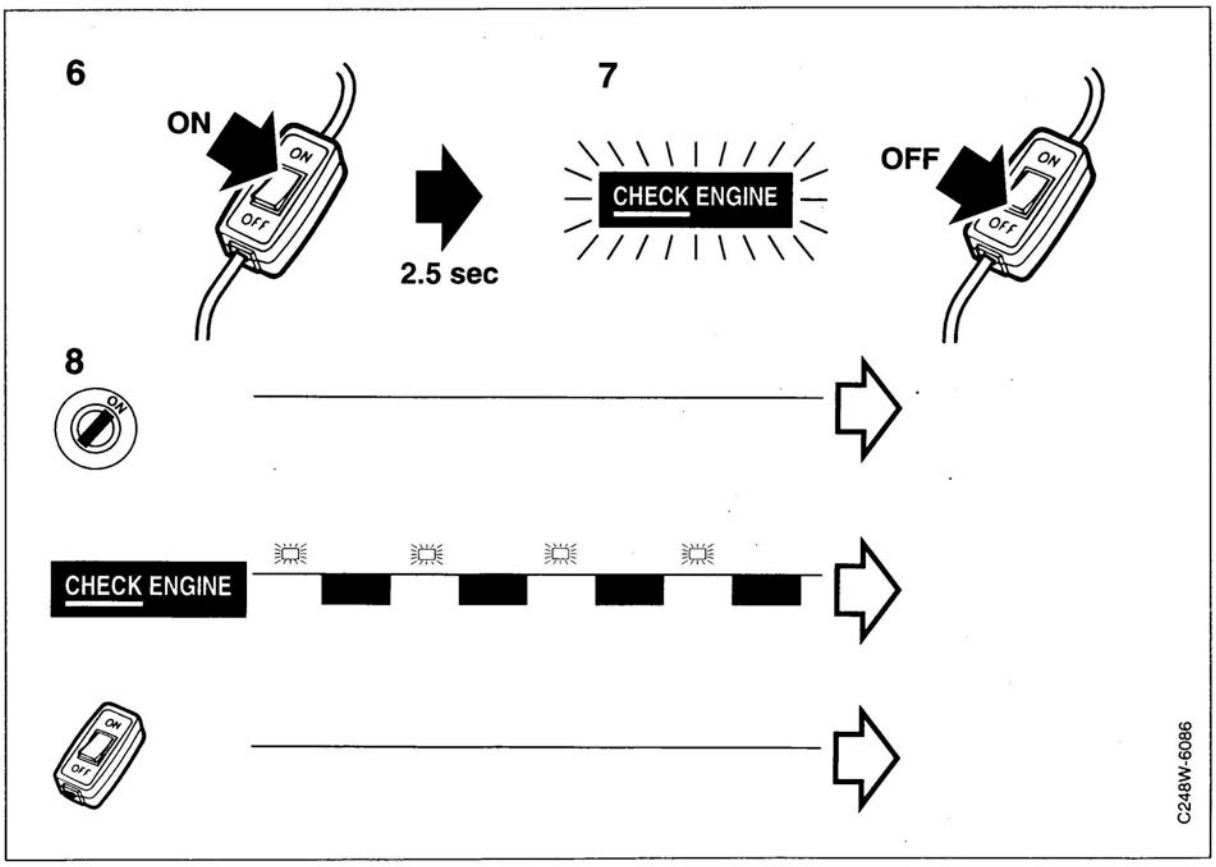

To check whether the system has two or more faults, continue as described below.

6 Set the switch to the "ON" position.

7 After **a short flash**, set the switch to the "OFF" position.

Fault code No. 2 will then be flashed in the same manner as fault code No. 1.

If an additional fault is stored in the memory, it will be flashed in the same way as the first fault but with its own fault code.

8 A third fault code, if any, can be retrieved in the same manner. If no third fault is stored in the memory, or if all faults have been rectified, this will be indicated by an unbroken series of long flashes.

Start all over again

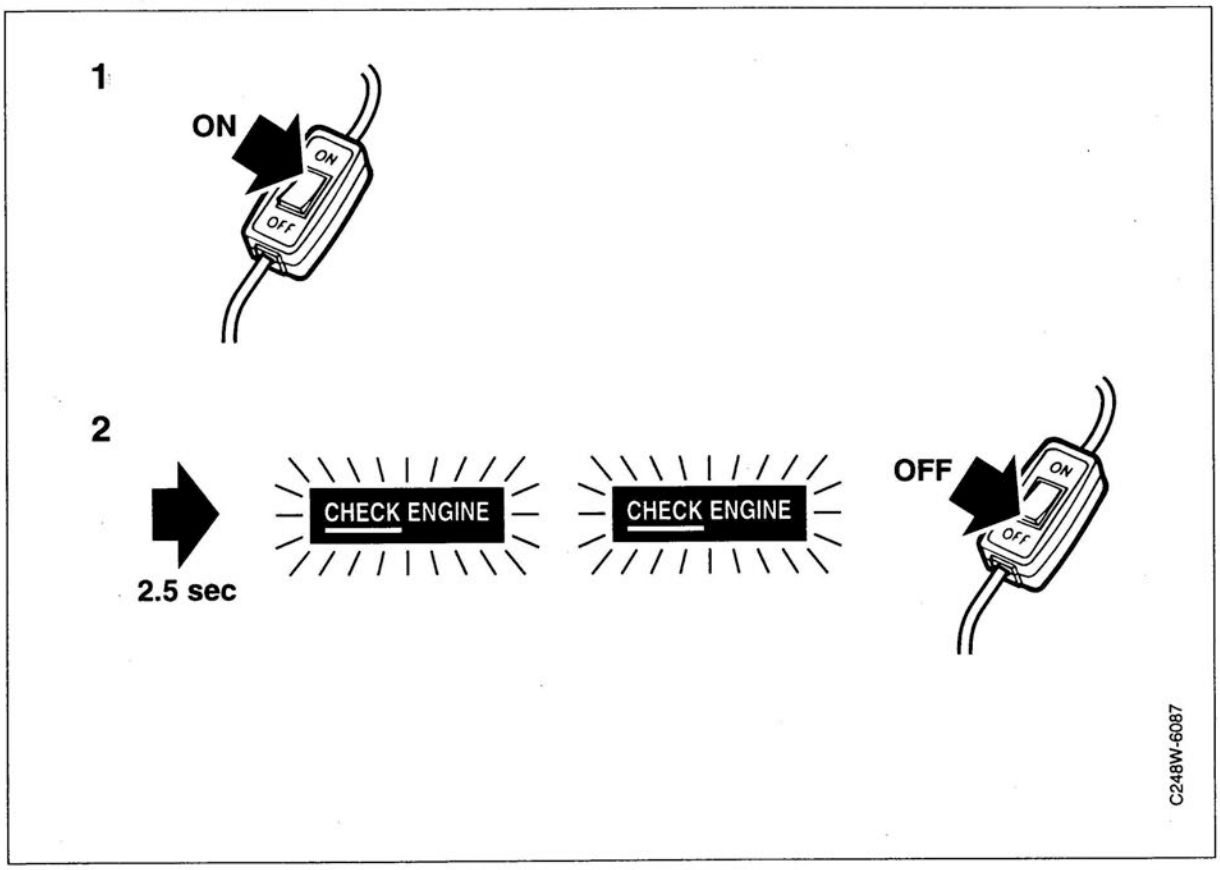

If you want to repeat the fault codes from the beginning for any reason, proceed as follows:

1 Set the switch to the "ON" position.

2 After **two short flashes**, set the switch to the "OFF" position. The fault codes will now be flashed again, starting with fault code No. 1.

Clearing the memory

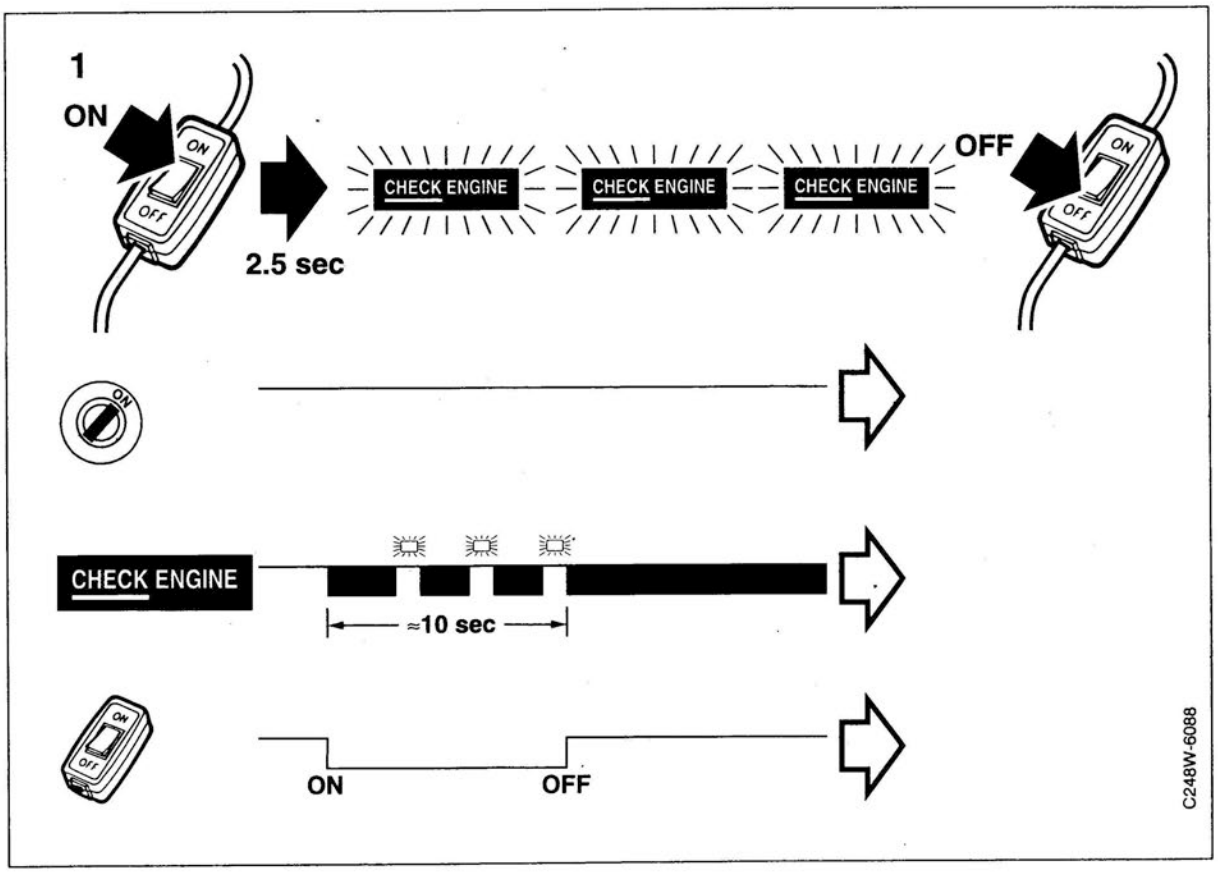

1 Set the switch to the "ON" position.

2 After **three short flashes**, set the switch to the "OFF" position.
The fault memory is now empty.

Important

The fault memory can be cleared only after code "00000" has been flashed, **long flashes** (end of fault codes).

Fault codes, self-diagnosis

When faults arise in the LH 2.4 system that can be classified as faults of "memorizing" type, the car must be driven for about 10 minutes so that corresponding fault codes will not reappear even though the fault has been rectified. The reason for this is that the system endeavours to compensate for changes that affect the function in one or the other direction.

When the system compensates for values that are outside the fault limit, the appropriate fault code is generated. When the fault codes are cleared, the memorized fault compensation procedure remains. Before the fault codes are cleared, the system must memorize a fresh compensation procedure.

This compensation procedure takes a certain time for the system to implement, depending on what the fault is. Driving the car for 10 minutes with a warmed-up engine will give the system sufficient time to "learn" and adapt to different conditions.

This applies to the following fault codes;
12223, 12224 and 12225
(oxygen sensor signal/preheating)
12111 and 12112
(memorizing fault, oxygen sensor control)
12113 and 12114
(memorizing fault, idle speed control)

Intermittent faults

Intermittent faults of a serious nature cause the "CHECK ENGINE" lamp (MIL) to light up when the fault occurs. When the fault temporarily disappears, the "CHECK ENGINE" lamp (MIL) goes out but the fault code is stored in the memory where it remains.

Component and signal testing

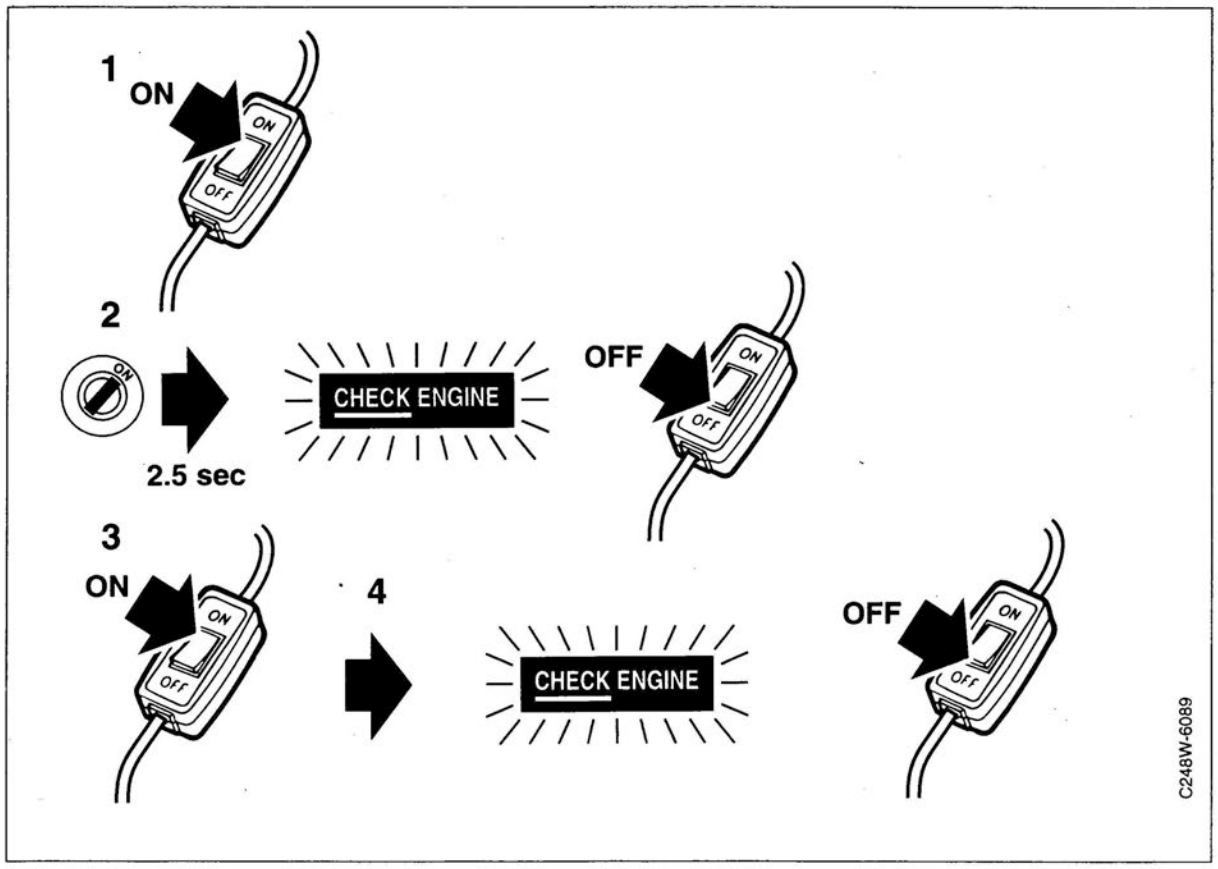

Carry out testing by beginning with point 1 and covering all points up to point 9, see the table on the next page. Connections are the same as for "Fault diagnosis, stored faults".

Important

For this test, set the switch to the "ON" position **before** switching on the ignition.

1 Set the switch to the "ON" position.

2 Switch on the ignition and wait for **a short flash** of the "CHECK ENGINE" lamp (MIL) and then immediately set the switch to "OFF".
The fuel pump should start (if it is not defective) at the same time as the lamp flashes. Listen for the sound of the pump and possibly check the fuel pressure.

Important

The fuel pump will run for only 1 second. No ID code is produced for this test.

3 To proceed with test No. 2, i.e. injectors, set the switch to the "ON" position.

4 After **a short flash** , set the switch to the "OFF" position.
A code will now be flashed in the same manner as in "Fault diagnosis, stored faults", i.e. a long flash begins and ends the code which consists of short flashes only. Check by listening for the sound of the injectors working.

Component and signal testing (contd.)

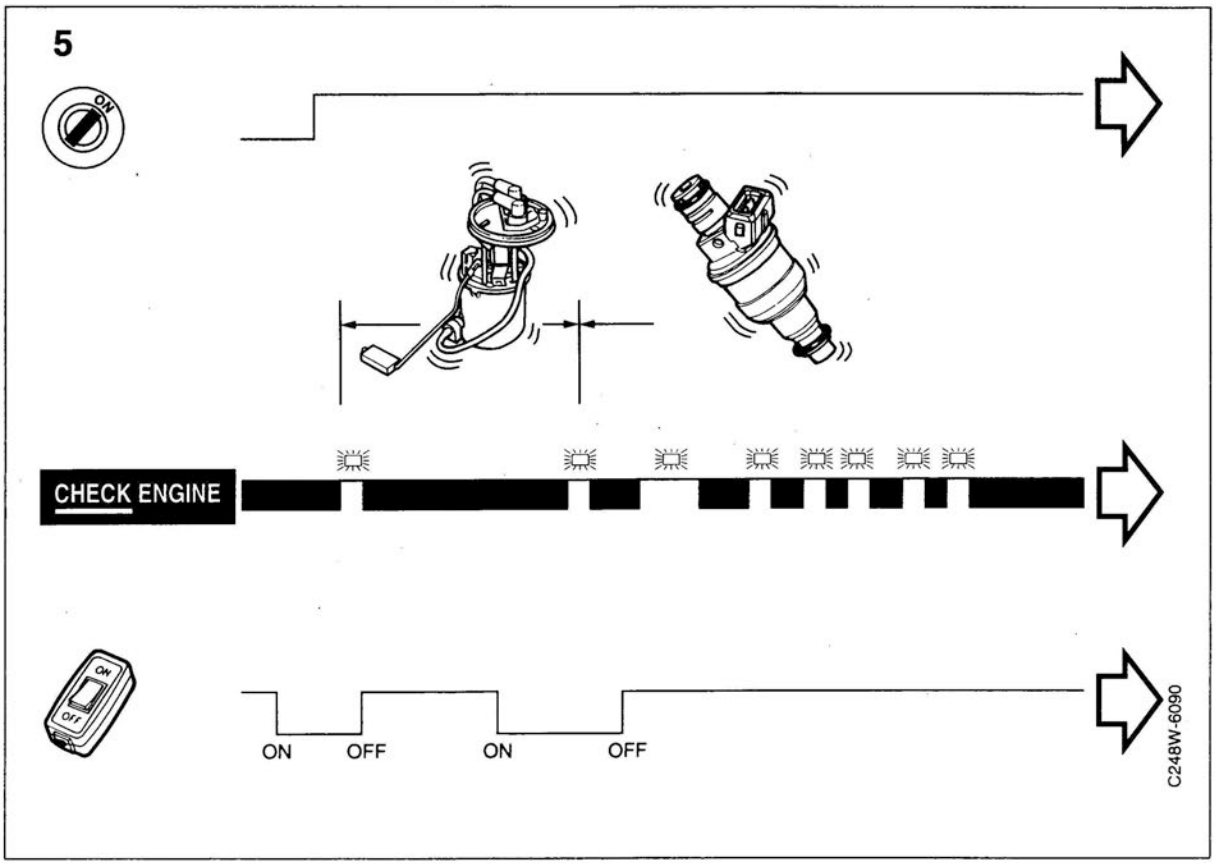

5 Go through the remaining points in the table in the same way. Set the switch to the "ON" position - wait for a short flash - set the switch to "OFF".

Component and signal testing table

ID code	Component/signal	Remarks
12432	Fuel signal	Listen (pump runs for about 1 sec.).
12411	Injectors	Listen
12412	IAC valve	The valve changes between open and closed at 1-second intervals. Listen.
12413	ELCD valve	The valve changes between open and closed at 1-second intervals. Listen.
12414	EGR valve	Listen
12415	A/C	Listen
12421	Drive signal, automatic transmission.	The lamp stops flashing on shifting from "N" to "D".
12424	Throttle switch, idle signal.	The lamp stops flashing on depression of the accelerator.
12431	Throttle switch, full-load signal	The lamp stops flashing when the accelerator is floored.

LH system tester

The test equipment consists of an instrument, a power supply cable, a test cable with a double connector and a pressure sensor with magnet.

The test cable is available in two versions:

- 25-pin, for cars with LH 2.2
- 35-pin, for cars with LH 2.4, LH 2.4.1 and LH 2.4.2

Power supply

The cable with battery terminal clamps connects to the battery to provide the +12 V power supply.

Pressure sensor

The pressure sensor connects to the LH system for fuel pressure measurement.

Range of measurement: 0-10 bar
Pressure class: 1%

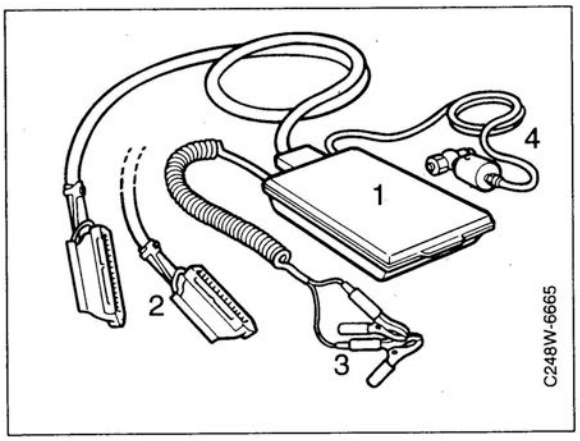

1 LH system tester
2 Signal cable, tester control module
3 Cable with battery terminal clamps
4 Pressure sensor, fuel pressure measurement

Connection to the car

Connection is made between the control module and the car's wiring harness by means of a double connector (male/female type) and a 2-metre exchangeable cable.

1 Access the control module by removing the cover panel over the false bulkhead space on the left-hand side.
If the car is equipped with ABS brakes, unplug the ABS control module and remove its bracket. Remove the control module retaining screws.

2 Connect the instrument by plugging in the cable with the double connector to the control module and the car's wiring harness.
Use the 25-pin connector on cars with LH 2.2 and the 35-pin connector on cars with LH 2.4, LH 2.4.1 and LH 2.4.2.

3 To avoid nipping, run the cables between door and body where the weatherseal is separated and then under the trailing edge of the bonnet on the left-hand side.

Connect the clamps to the battery, first negative (-) and then positive (+).

Important

Check that the battery terminal posts are clean so that good contact is assured. Always make sure that the power supply cable is connected to the instrument before connecting it to the battery.

LH system tester (contd.)

Before starting work

Before starting fault diagnosis with the LH tester, it is advisable to use the integral fault diagnosis system on cars with LH 2.4 to check that no intermittent faults are stored in the LH control module.

It is important to do this first, because connecting the LH tester to the system cuts off the control module's power supply with the result that its fault memory is cleared and the possibility of detecting intermittent faults is lost.

The same applies when either of the battery cables is disconnected.

In a computerized fault diagnosis system like the LH system tester, reference values for some of the parameters to be checked are preprogrammed in the tester's memory.

The reference level in the software must be balanced in such a way that any existing faults will be detected, in certain cases within extremely tight limits. This means that in such cases a fault may sometimes be indicated when in actual fact no fault exists.

This can only happen in situations where driving conditions are vastly different from those normally encountered.

Examples of spurious faults that may be indicated under these conditions are as follows:

LH 2.2	LH 2.4	
E0020	E013	Excessive warm-up period, due to a faulty thermostat or prolonged idling in extremely cold weather.
E020	E020	Prolonged engine braking, incorrect signal level from the oxygen sensor.
E207	E207	Prolonged acceleration at wide open throttle; abnormally high mass air flow sensor voltage.
E113	E118	Engine overrevved, overrev cut-out tripped, boost pressure too high.

It often happens that the fuel injection system is suspected of being faulty when the fault really exists in the engine itself or the electrical system. Therefore, check the following points before testing the fuel injection system:

- Battery condition
- Charging system
- Ignition system (timing, spark plugs, HT leads, distributor cap, rotor, etc.)
- Battery connections and grounding point
- Engine condition (compression, intake manifold vacuum, etc.)
- Air leakage in turbo/induction system

In some cases a quick check of the main relay and pump relay can be carried out to advantage, as follows:

1 Unplug the connectors from the LH control module and mass air flow sensor.

2 Plug in a Breakout Box (BOB).

3 **LH 2.2**
Connect pins 17 and 21 to ground via pin 25.
LH 2.4
Connect pins 20 and 21 to ground via pin 17

4 Check that power is supplied to:
LH 2.2 on
pins 9 and 13 (LH control module)
pin 2 or 5 (mass air flow sensor)
pin 2 (IAC valve)
fuse 14 (fuel pump relay)
LH 2.4 on:
pins 9 and 18 (LH control module)
pin 5 (mass air flow sensor)
fuse 14 (fuel pump relay)

Test readings, control module connections

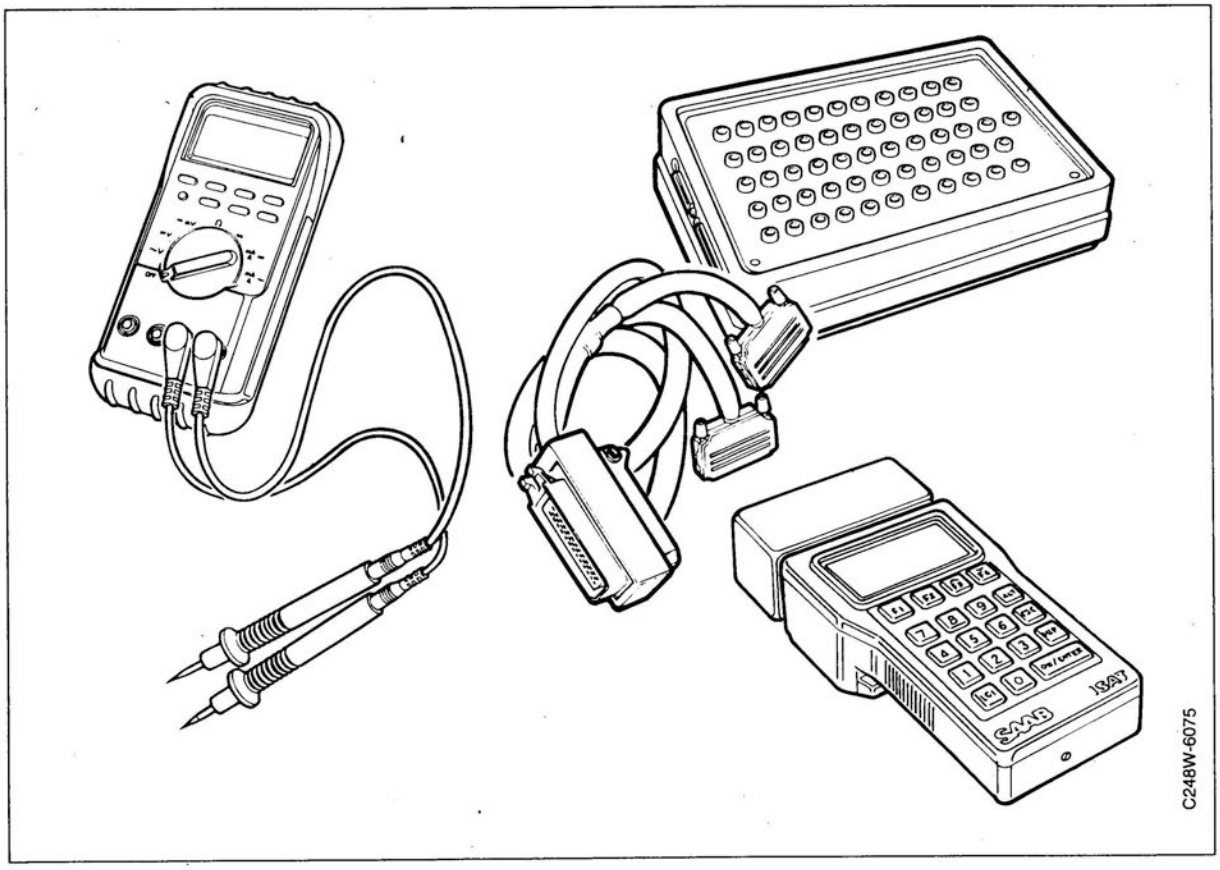

Test readings and directions for measuring voltage levels on the control modules are given in this section.

Some important points to remember:

- Unless otherwise specified, all voltage readings should be taken with all components connected and with the ignition switch in the ON position.
- Readings must be taken with a Breakout Box (BOB) connected between the control module and the control module connector.
- Several voltage levels must be regarded as guiding values. Your common sense should tell you whether a reading is correct or not.
- If any test reading is incorrect, use the wiring diagram to trace the leads, connectors or components you consider ought to be checked more thoroughly.
- All test readings are for normal operating conditions (e.g. warm engine).
- Specified test readings are in respect of a calibrated Fluke 88/97.
- Test readings %(+) and ms(+) show the pulse ratio and pulse duration of the signal. A test instrument capable of giving pulse ratio and pulse width readings must be used. The (+) sign indicates positive trigger pulses, TRIG+.

Control module connections, LH 2.2

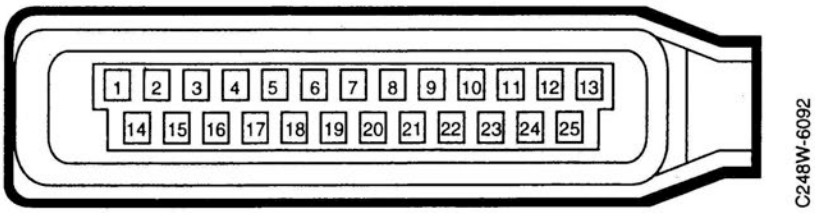

Pin	Lead colour	Component/function	Input/ Output	Voltage (V)	Remarks
1	BU	Engine speed signal	Input	6.5 >8	M1986- On starter motor cranking At idle speed
2	YE	Temperature sensor	Input	4 - 0.5	-20°C - +80°C
3	GY	Throttle position switch (idling)		0 5	At idle speed Above idle speed
4	OG	Signal, Drive position (Aut)	Input	Battery voltage 0	R, D, 1, 2 and 3 P, N and manual gearbox
5	BK	Signal ground		0	Separate from power ground
6	BU/WH	Mass air flow sensor, ground signal	Input	0	Separate from power ground
7	OG	Mass air flow sensor, signal	Input	2 5	Idling Full load
8	RD/WH	Mass air flow sensor, burn-off	Output	4 0	At burn-off In other cases
9	GY/WH	Power supply from main relay	Input	Battery voltage	
10	BU/WH	IAC valve	Output	6 - 11	Idling
11	BK	Grounding point, control module		0	Separate from power ground

Control module connections, LH 2.2 (contd.)

Pin	Lead colour	Component/function	Input/ Output	Voltage (V)	Remarks
12	GN/RD	Throttle position switch (wide open throttle)		0 5	Wide open throttle Idling
13	GN/RD	Injectors, control signal	Output	7.1 Hz 2.5 - 4.5 ms	Use the ISAT scan tool pulse measurement function and check that the frequency increases with throttle opening
14	WH	Mass air flow sensor		~2	
15	BK	Grounding point for coding (certain versions)		0	
16	RD/WH	Raising engine idle speed (A/C compressor)	Input	Battery voltage 0	A/C engaged A/C disengaged
17	VT	Pump relay		~1 Battery voltage	Activated Ignition on
18	GN/WH	Main fuse box, positive terminal block (+15)		Battery voltage	
19	VT/WH	CHECK ENGINE lamp (MIL)	Output	Battery voltage 1	Out On
20	WH	Oxygen sensor - M1988 PRE-IGNition, DI/APC M1989-	Input Input	0.6 - 1.0 0 - 0.4 0 6.5 12	Rich Lean Enrichment PREIGNition No enrichment Enrichment knocking
21	YE/WH	Main relay operating circuit	Output	~1 Battery voltage	Ignition on Ignition off
22	GN	Oxygen sensor pulse ratio, data link connector			
23	YE/RD	IAC valve	Output	6 - 12	Idling
24	BU/RD	Load signal, Tq (9000 Turbo with DI and 9000i/S with EZK)	Output		Use the ISAT scan tool pulse measurement function and check that the frequency increases with throttle opening
25	BK/WH	Grounding point, power ground		0	Separate from signal ground

Control module connections, LH 2.4 and 2.4.1

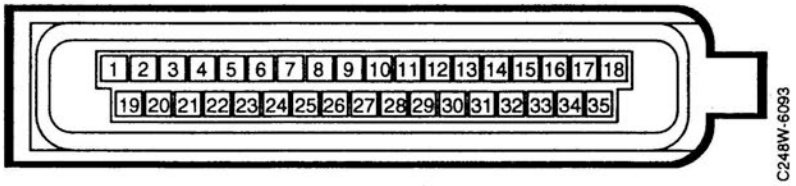

Pin	Lead colour	Component/function	Input/ Output	Voltage (V)	Remarks
1	BU	Engine speed signal	Input	6.5 >8	On starter motor cranking At idle speed
2	GY	Throttle position switch (idling)		0 = closed ~11 = open	At idle speed Above idle speed
3	GN/RD	Throttle position switch (wide open throttle) Cars with ETS: Throttle position from ETS		0 = closed ~11 = open ~0.5 10	At wide open throttle Before wide open throttle Idling Full load
4	RD	Branch point +30	Input	Battery voltage	
5	BK	Signal ground		0	Separate from power ground
6	BU/WH	Mass air flow sensor, ground signal	Input	0	Separate from power ground
7	OG	Mass air flow sensor, signal	Input	~2 ~5	Idling Full load
8	RD/WH	Mass air flow sensor, burn-off	Output	4 0	At burn-off In other cases
9	GY/WH	Power supply from main relay	Input	Battery voltage	
10	-	-	-	-	-
11	GN/RD	Relay, A/C Time-delay relay, A/C			LH 2.4.1 LH 2.4
12	BU/WH	Diagnostics lead K Data link connector, diagnostics, pin 1	Input/ Output		
13	YE	Temperature sensor	Input	4 - 0.5	-20°C - +80°C

Control module connections, LH 2.4 and 2.4.1 (contd.)

Pin	Lead colour	Component/function	Input/ Output	Voltage (V)	Remarks
14	RD/WH	A/C-ACC, load signal (not ETS)	Input	12 0	AUTO closed antifrost thermostat ECON, OFF
15	GN/YE	Jumper connection for cold-starting valve		12 0	Valve fitted Valve not fitted
16	GN/RD	Diagnostics lead L Data link connector, diagnostics, pin 2	Input/ Output		
17	BK/WH	Chassis ground		0	Separate from signal ground
18	GN/WH	Injectors	Output	7.1 Hz 2.5 - 4.5 ms	Use the ISAT scan tool pulse measurement function and check that the frequency increases with throttle opening
19	YE/WH	EGR valve (California, M1990)	Output	Battery voltage <Battery voltage	Not activated Activated
20	VT	Fuel pump operating circuit		1 Battery voltage	Activated Ignition on
21	YE/WH	Main relay operating circuit	Output	1 Battery voltage	Ignition on Ignition off
22	VT/WH	CHECK ENGINE lamp (MIL)	Output	Battery voltage 1	Out On
23	YE/WH	EGR, temperature sensor (California, M1990)	Input	4.5 <4.5	EGR closed EGR open
24	GN	Oxygen sensor	Input	0.6 - 1.0 0 - 0.4	Rich Lean
25	BU/RD	Load signal, Tq (EZK/DI)	Output		Use the ISAT scan tool pulse measurement function and check that the frequency increases with throttle opening
26	WH	Shift-up lamp (USA)	Output	Battery voltage 0	Not activated Activated
27	YE/RD	EVAP canister purge valve	Output	Battery voltage 1	Open valve Closed valve

Control module connections, LH 2.4 and 2.4.1 (contd.)

Pin	Lead colour	Component/function	Input/ Output	Voltage (V)	Remarks
28	WH	PRE-IGNition, DI/APC	Input	0 6.5 12	Enrichment PRE-IGNition No enrichment Enrichment knocking
29	GY/WH	Codification	Input	12	Automatic transmission
30	OG	Raising engine idle speed, automatic transmission	Input	Battery voltage 0	R, D, 1, 2 and 3 P, N and manual gearbox
31	GN/RD	Consumption signal to EDU	Output		Use the ISAT scan tool pulse measurement function and check that the frequency increases with throttle opening
32	BN	Cold-starting valve	Output	Battery voltage 0	Not activated Activated (<-15°C)
33	BU/WH	IAC valve	Output	5 - 11	Idling, no load
34	GN	Speed sensor LH 2.4.1 and LH 2.4 (USA)	Input	6 0 or 12	Rotating wheels Stationary wheels
35	GN/WH	Power supply +15	Input	Battery voltage	Ignition on

Control module connections, LH 2.4.2

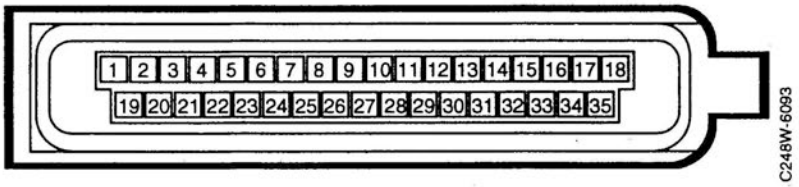

Pin	Lead colour	Component/function	Input/ Output	Voltage (V)	Remarks
1	BU	Engine speed signal from ignition system	Input	6.5 >8	On starter motor cranking At idle speed
2	GY	Throttle position sensor	Input	0.2 4.0	Idling Full load
3	GN/RD	Throttle position signal to DI/APC (PWM) Cars with ETS: throttle position signal from ETS	Output	1.0 10 ~0.5 ~10	Idling Full load Idling Full load
4	RD	Power supply +30	Input	Battery voltage	
5	BK	Signal ground		0	Separate from power ground
6	BU/WH	Mass air flow sensor, ground signal	Input	0	Separate from power ground
7	OG	Mass air flow sensor, signal	Input	2 5	Idling, engine running Full load, engine running
8	RD/WH	Mass air flow sensor, burn-off	Output	4 0	At burn-off In other cases
9	GY/WH	Power supply from main relay	Input	Battery voltage	
10	GN/RD	Throttle position sensor, reference voltage	Output	5	
11	GN/RD	A/C relay, operating circuit	Output	Battery voltage 0	A/C not engaged A/C engaged

Control module connections, LH 2.4.2 (contd.)

Pin	Lead colour	Component/function	Input/ Output	Voltage (V)	Remarks
12	BU/WH	Diagnostics lead K	Input/ Output		
13	YE	Engine coolant temperature sensor	Input	4 - 0.5	-20°C - +80°C
14	GN/WH	A/C, ACC load signal	Input	12 0	AUTO (provided that the antifrost thermostat is connected) ECON, OFF
15	GN/GY	Idle air control valve, opening control signal	Output	7 - 11	Idling at no load and hot engine
16	GN/RD	Diagnostics lead L	Input/ Output		
17	BK/WH	Power ground		0	
18	GN/RD	Injectors	Output	7.1 Hz 2.5 - 4.5 ms	Use the ISAT scan tool pulse measurement function and check that the frequency increases with throttle opening
19	-	-	-	-	-
20	VT	Fuel pump relay operating circuit		1 Battery voltage	Activated Ignition on
21	YE/WH	Main relay operating circuit	Output	1 Battery voltage	Ignition on Ignition off
22	VT/WH	CHECK ENGINE lamp (MIL)	Output	Battery voltage 1	Out On
23	YE/WH	Mass air flow sensor		~2	Cars without cat.
24	GN	Oxygen sensor	Input	0.6 - 1.0 0 - 0.4	Rich Lean
25	BU/RD	Load signal, Tq	Output	1.0 - 4.5	Use the ISAT scan tool pulse measurement function and check that the frequency increases with throttle opening

Control module connections, LH 2.4.2 (contd.)

Pin	Lead colour	Component/function	Input/ Output	Voltage (V)	Remarks
26	WH	Shift-up lamp (US manual)	Output	Battery voltage 0	Not activated Activated
27	YE/RD	EVAP canister purge valve	Output	Battery voltage 1	Open valve Closed valve
28	WH	PRE-IGNition	Input	0 6.5 12	Enrichment PRE-IGNition No enrichment Enrichment knocking
29	GY/WH	Codification	Input		Not used
30	OG	DRIVE signal	Input	Battery voltage 0	R, D, 1, 2 and 3 P, N and manual gearbox
31	GN/RD	Consumption signal to EDU 3	Output		Use the ISAT scan tool pulse measurement function and check that the frequency increases with throttle opening
32	-	Cold-starting valve (certain versions)	Output	Battery voltage 0	Not activated Activated (<-15°C)
33	BU/WH	Idle air control valve, closing control signal	Output	5 - 11	Idling, no load
34	GN	Speed sensor	Input	6 0 or 12	Rotating wheels Stationary wheels
35	GN/WH	Power supply +15	Input	Battery voltage	Ignition on

Adaptation

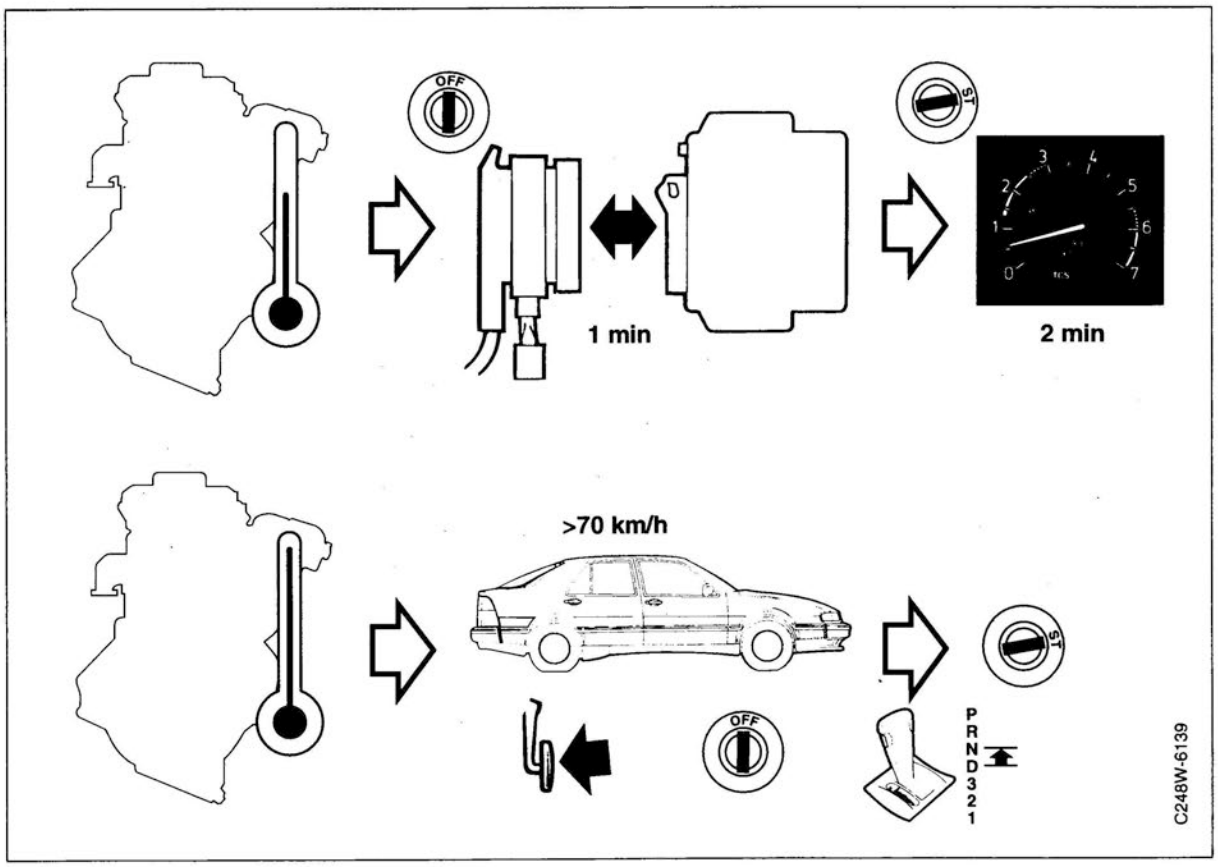

To obtain the best possible performance from the LH system it is extremely important for adaptation of the system to be carried out, both at idling speed and while the car is being driven.

Adaptation affects drivability, and also diagnostic trouble code detection, to a high degree. Adaptation of the system should be carried out in connection with the replacement of components or when any other work is carried out on the system.

Adaptation normally takes place while the car is being driven but to accelerate the process the following adaptation procedure can be used:

Idling

1 Start the engine and warm it up. When it has reached normal operating temperature, switch it off.

2 Clear any fault codes and zeroize the adaptation levels by unplugging the LH control module connector for about 1 minute. Then plug the connector in again.

3 Start the engine and run it at idling speed for at least 2 minutes.

4 Switch off the engine and repeat point 3.

Driving

> ⚠ **WARNING**
>
> Do not take out the ignition key when the ignition switch has been moved to the OFF position as this engages the steering column lock and could be the cause of an accident.

1 With the engine properly warmed up, drive the car at a speed of 70 km/h.
Manual gearbox
Declutch, switch off the engine and then immediately start it again.
Automatic transmission
Move the selector lever to the N position. Switch off the engine and then immediately start it again.

2 Repeat the above procedure.

Diagnostic trouble code table

ISAT scan tool code	Lamp-flash code	LH test code	Diagnostic procedure, see page	Remarks
42241/22241 42251/22251 42252/22252 42291/22291	12232	E004	92	
		E009 E018 E109	94	LH 2.2
42440/22440	12224	E020 E024	96	
		E020	98	LH 2.2
42441/22441 42442/22442 42451/22451 42452/22452	12112 12111		100	
44221/24221	12254 12231	E001	102	
44261/24261	12243		104	
44671/24671	12253	E328	106	
45641/25641 45651/25651 45691/25691	12221	E207 E107 E007	108	
45723/25723	12244		112	
45771/25771 45772/25772	12212 12213 12251	E102 E103	114	LH 2.4.2
45771/25771 45772/25772	12212 12213 12251	E002 E003 E102 E103	116	LH 2.4 and LH 2.4.1
45771/25771 45772/25772	12212 12213		118	ETS
		E002 E103	120	LH 2.2
46221/26221 46271/26271	12214	LH 2.4, 2.4.1, 2.4.2 E013 E113 LH 2.2 E002 E102	122	
46391/26391	12245		124	
58121/38121	12242	E008 E108	128	
58321/38321	12222		132	LH 2.4.2

ISAT scan tool code	Lamp-flash code	LH test code	Diagnostic procedure, see page	Remarks
58321/38321	12222	E033	134	LH 2.4 and LH 2.4.1
		E010 E023	136	LH 2.2
LH 2.4 58322/38322 LH 2.4.2 58372/38372 58382/38382	12252		138	
58371/38371	12241	E218	140	LH 2.4, 2.4.1, 2.4.2
		E213	142	LH 2.2
67192	12233		144	

Command codes

Important

Use of the ISAT scan tool may cause a breakdown in communication with the LH 2.4.1 and LH 2.4.2 systems when any of the following command codes is entered:

22A — 22B — 23A — 239 — 249 — 250 — 279

The reason for this is that these command codes are not preprogrammed in all the LH control module's software.

In the event of a breakdown in communication, contact with the ISAT scan tool and the LH system must be established afresh.

Code	Function/signal	Display text/example	LH 2.4.2	LH 2.4 LH 2.4.1
22A	Mass air flow sensor	803.6 = 3.6 V 804.7 = 4.7 V	X	
22B	Battery voltage	8010.6 = 10.6 V 8007.3 = 7.3 V	X	
23A	EGR, pulse ratio	80000 = 0% (closed valve) 80012 = 12% 80027 = 27%	X	
100	All diagnostic trouble codes are transferred from the control module's memory to the ISAT scan tool.		X	X
200	Check A/C status	8B100 = activated 8B000 = not activated (not ETS cars)	X	X
201	Throttle position	8B101 (= idling position) 8B001 (= normal position) 8B301 (= full load position) 8B103 (= idle speed - full load)	X	X
202	ELCD valve position	8B002 (= open) 8B102 (= closed)	X	X
203	DRIVE signal status	8B103 = active 8B003 = not active	X	X
204	Shifting indication (SHIFT-UP)	8B104 = lamp on 8B004 = lamp out	X	
205	Oxygen sensor status	8B105 (= lean) 8B305 (= rich) 8B005 (= inactive)	X	X

jxh

Command codes (contd.)

Code	Function/signal	Display text/example	LH 2.4.2	LH 2.4 LH 2.4.1
206	PRE-IGNition signal *)	8B106 = enrichment pre-ignition 8B006 = enrichment knocking	X	
207	Ignition pulses	8B007 (= pulses absent) 8B107 (= pulses present)	X	X
239	IAC, pulse ratio	80035 = 35% 80043 = 43% (not ETS cars)	X	
249	Engine speed	801000 = 1,000 805500 = 5,500 rpm	X	
250	Engine coolant temperature	800-30 = -30°C 80+130 = +130°C	X	
279	Throttle position in degrees (°)	Example: 80030 = 30° (not ETS cars)	X	
382	Control module code	(The last 4 digits are the Bosch spare part number)	X	X
550	Activates the AC function	8A550 = activated	X	X
552	Activates the injectors	8A552 (15 Hz and 1.5 ms opening duration)	X	X
553	Activates IAC (1 Hz)	8A553 (not ETS cars)	X	X
554	Activates ELCD (1 Hz)	8A554 from control module memory to ISAT scan tool	X	X
555	Activates EGR (1 Hz)	8A555 = activated (only where applicable)	X	X
800	Ends communication		X	X
900	Clears all diagnostic trouble codes and restores all adaptive values to basic level.	11111	X	X
930	Restores adaptive values to basic level.	11011	X	X

*) If functioning normally the ISAT scan tool should show 8B006 and 8B106 alternately.

ISAT SCAN TOOL	Cause of fault
42241/22241	Voltage too high, over 16 V.
42251/22251	Voltage too low, under 1 V
42252/22252	Voltage too low, under 10 V
42291/22291	Voltage lower than 10 V or higher than 16 V
Lamp-flash code 12232	**Condition** Diagnostic trouble code detected 1 s after engine started and engine speed above 600 rpm.
LH system test E004	**Fault symptom** Hesitant running, uneven idle speed, engine will not start
Test data LH 2.4, 2.4.1, 2.4.2 Pin 4: +30 Battery voltage, ignition OFF Pin 9: +30 Battery voltage, ignition ON Pin 35: +15 Battery voltage, ignition ON	

Diagnostic procedure

1 Check the battery as well as the starting and charging systems. Also check other fault symptoms which indicate low battery capacity or poor generator charging efficiency.

2 Connect a Breakout Box to the car's wiring harness. The LH control module should not be connected. The ignition switch should be in the OFF position. Check that battery voltage is present across pins 4 and 5 and also across pins 4 and 17.
Connect the LH control module. Turn the ignition switch to the ON position. Check that battery voltage is present across pins 9 and 5, pins 9 and 17, pins 35 and 5, and pins 35 and 17.
If no voltage is present, check the wiring and grounding point.

3 Turn the ignition switch to the OFF position. Disconnect the Breakout Box. Check that pins 5 and 17 are connected to ground.

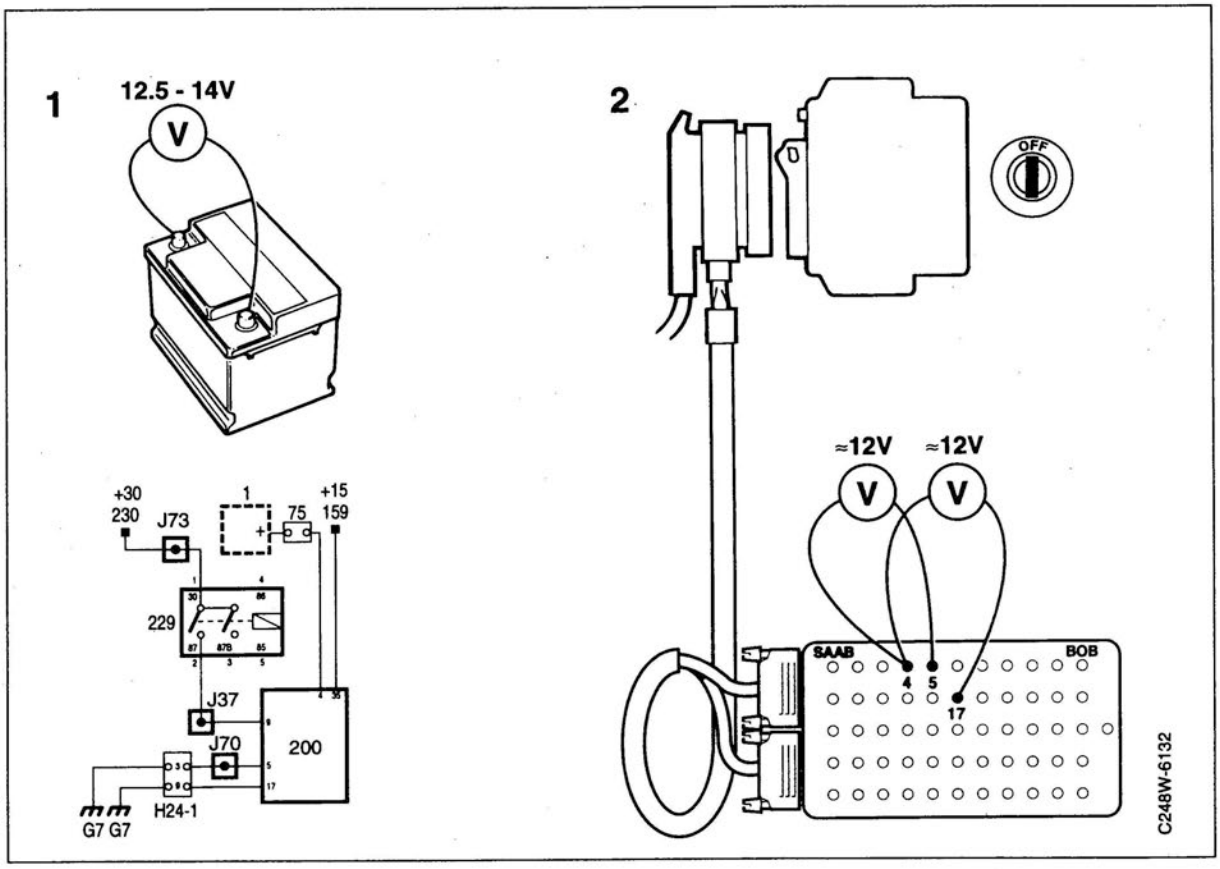
1
12.5 - 14V
V
+30
230
J73
1
75
+15
159
229
J37
J70
200
H24-1
G7 G7
2
OFF
≈12V
≈12V
V
V
SAAB
BOB
4
5
17
C248W-6132

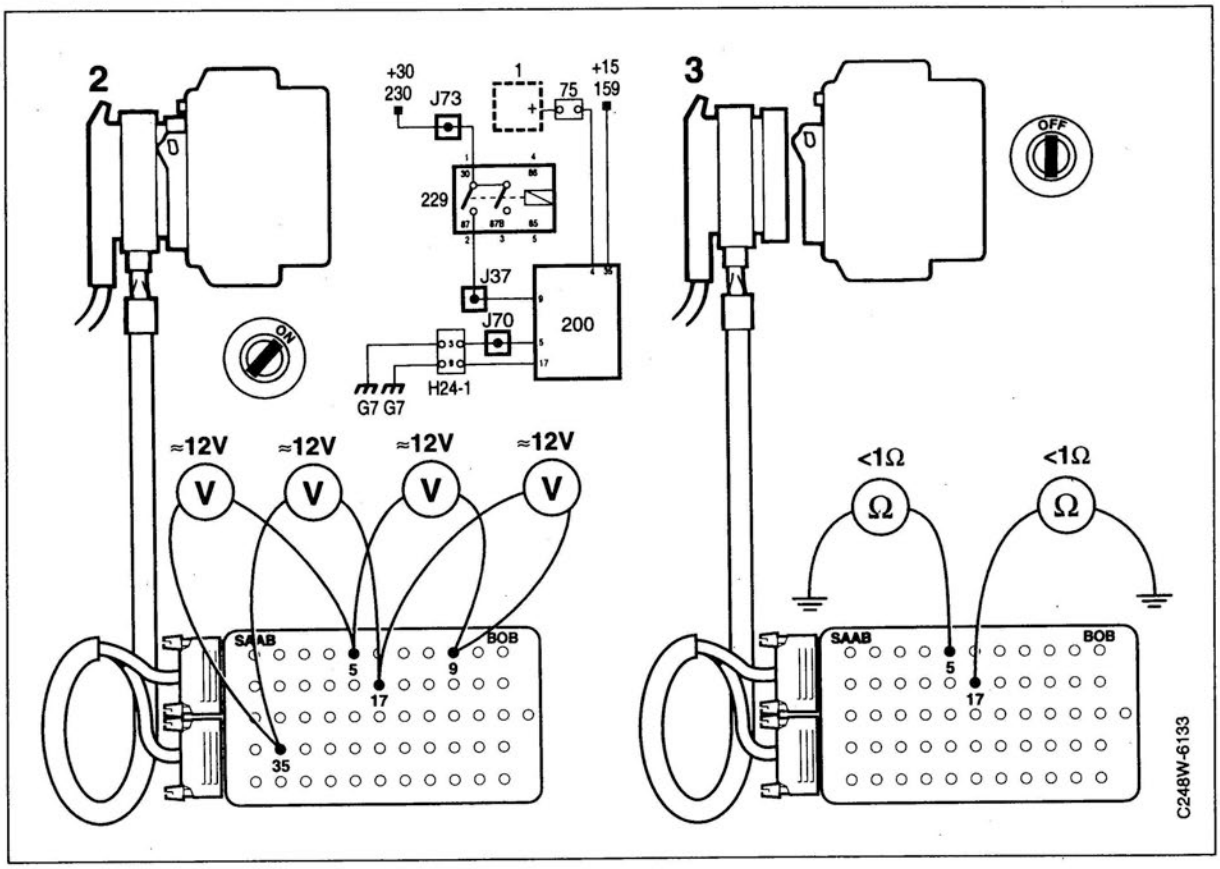
2
ON
+30
230
J73
1
75
+15
159
229
J37
J70
200
H24-1
G7 G7
≈12V
≈12V
≈12V
≈12V
V
V
V
V
SAAB
BOB
5
9
17
35
3
OFF
<1Ω
<1Ω
Ω
Ω
SAAB
BOB
5
17
C248W-6133

ISAT SCAN TOOL	Cause of fault Main relay, no power supply Main relay, power supply too low
Lamp-flash code	**Condition**
LH system test E009 E018 E109	**Fault symptom** Hesitant running, uneven idle speed, engine will not start
Test data LH 2.2 Pin 9: +30 Battery voltage, ignition ON Pin 18: +15 Battery voltage, ignition ON	

Diagnostic procedure

1 Check the battery as well as the starting and charging systems. Also check other fault symptoms which indicate low battery capacity or poor generator charging efficiency.

2 Connect a Breakout Box to the car's wiring harness. The LH control module should not be connected. Turn the ignition switch should to the ON position. Check that battery voltage is present across pins 9 and 5, pins 9 and 11, pins 18 and 5, and also across pins 18 and 11.
If no voltage is present, check the wiring and grounding point.

3 Turn the ignition switch to the OFF position. Check that pins 3, 5 and 25 are connected to ground. If they are not, check the wiring and grounding points.

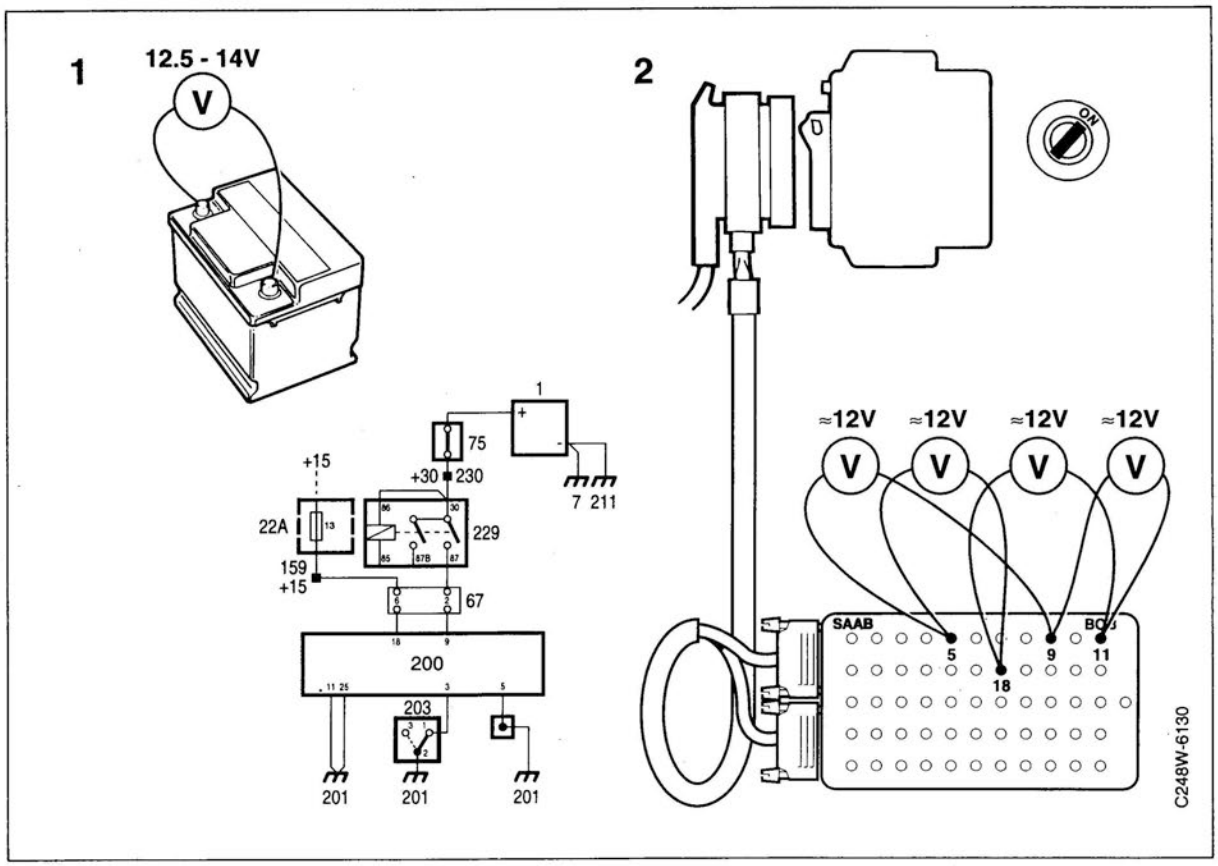
1
12.5 - 14V
V
2
ON
≈12V
≈12V
≈12V
≈12V
V
V
V
V
1
75
+15
+30
230
7 211
22A
229
159
+15
67
200
203
201
201
201
SAAB
BCU
5
9
11
18
C248W-6130

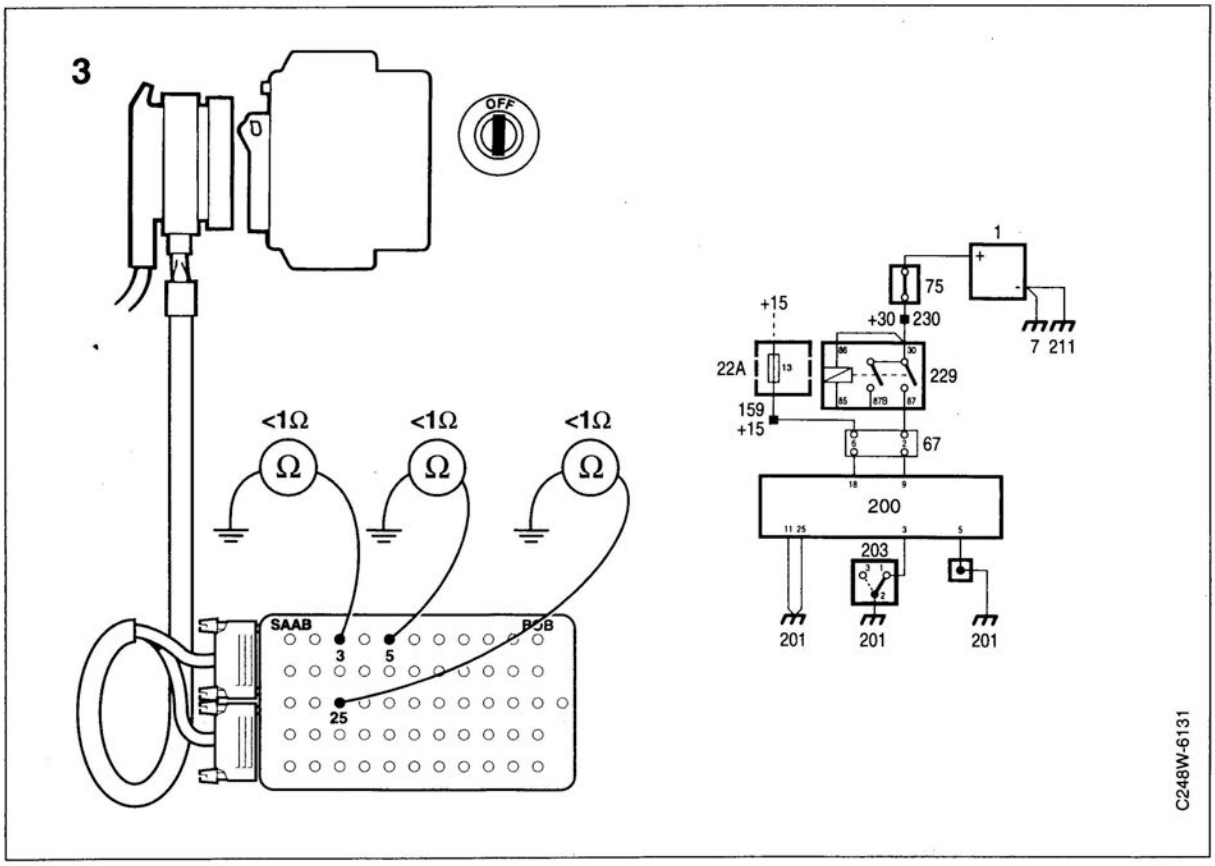
3
OFF
<1Ω
<1Ω
<1Ω
Ω
Ω
Ω
SAAB
BCB
3
5
25
1
75
+15
+30
230
7 211
22A
229
159
+15
67
200
203
201
201
201
C248W-6131

ISAT SCAN TOOL 42440/22440	**Cause of fault** Rich mixture, the oxygen sensor cannot regulate (integrator in end position).
Lamp-flash code 12224	**Condition** Short-circuit to live component/lead (reacts to low voltage).
LH system test E020 E024	**Fault symptom** CHECK ENGINE lamp (MIL) on. Engine running on rich mixture (for a certain period), black exhaust smoke.
Test data LH 2.4, 2.4.1, 2.4.2 Pin 24: 0.1 - 1.5 V varying.	

Diagnostic procedure

1 If an ISAT scan tool is not used, go to point 2.
With the engine hot, select command code 205 on the ISAT scan tool. The display should show the following codes in repeated sequence:
-8B105 (lean)
-8B305 (rich)
-8B005 (inactive)
If any of the codes is shown continuously, the oxygen sensor is not in proper working order.

2 Unplug the single-pole connector from the wiring harness.
Connect the multimeter (2 V d.c. range selected) to the oxygen sensor's black lead and ground.
Start the engine. The signal should oscillate between 0 and 1 V, where 0-0.4 V is a lean mixture and 0.6-1.0 V a rich mixture.
Since the signal in question varies with the fuel-air mixture, a lean mixture of the kind caused by a small vacuum leak, for instance, gives an oxygen reading of >1 and a sensor voltage of about 100 mV.
A rich mixture gives an oxygen reading of <1 and a sensor voltage of about 900 mV.
If these readings are not obtained, change the oxygen sensor.
If a signal is present, check the mounting of the oxygen sensor. A poor ground connection due to corrosion could be the cause of malfunctioning.
Connect a 12 V bulb and high power to the oxygen sensor body and battery positive (Batt+). The bulb should light up.
If is does not, remove the oxygen sensor and clean the threads.
With the ignition switch in the OFF position, unplug the oxygen sensor preheater connector and take a resistance reading across the oxygen sensor connections.
The resistance should be 4-8 ohms.
In the event of an open circuit or excessive resistance, change the oxygen sensor.

Useful tip
Run an extra ground lead from the oxygen sensor's outer casing (secured with a hose clip) to engine reference grounding point G7 on the lifting eye.

3 Check that battery voltage is present across the pins in the oxygen sensor connector.
If it is, go to point 4.
If it is not, check
- oxygen sensor fuse 28
- the lead between pin 1 of the oxygen sensor connector and fuse 28.
- the lead between pin 2 of the oxygen sensor connector and ground.

4 Plug the Breakout Box into the car's wiring harness, LH control module not connected.
Check the lead between pin 24 of the control module and the oxygen sensor.

5 If the fault persists in spite of the above checks, change the oxygen sensor and check its operation once again by selecting command code 205 on the ISAT scan tool.

6 Try fitting a new control module, see page 61.

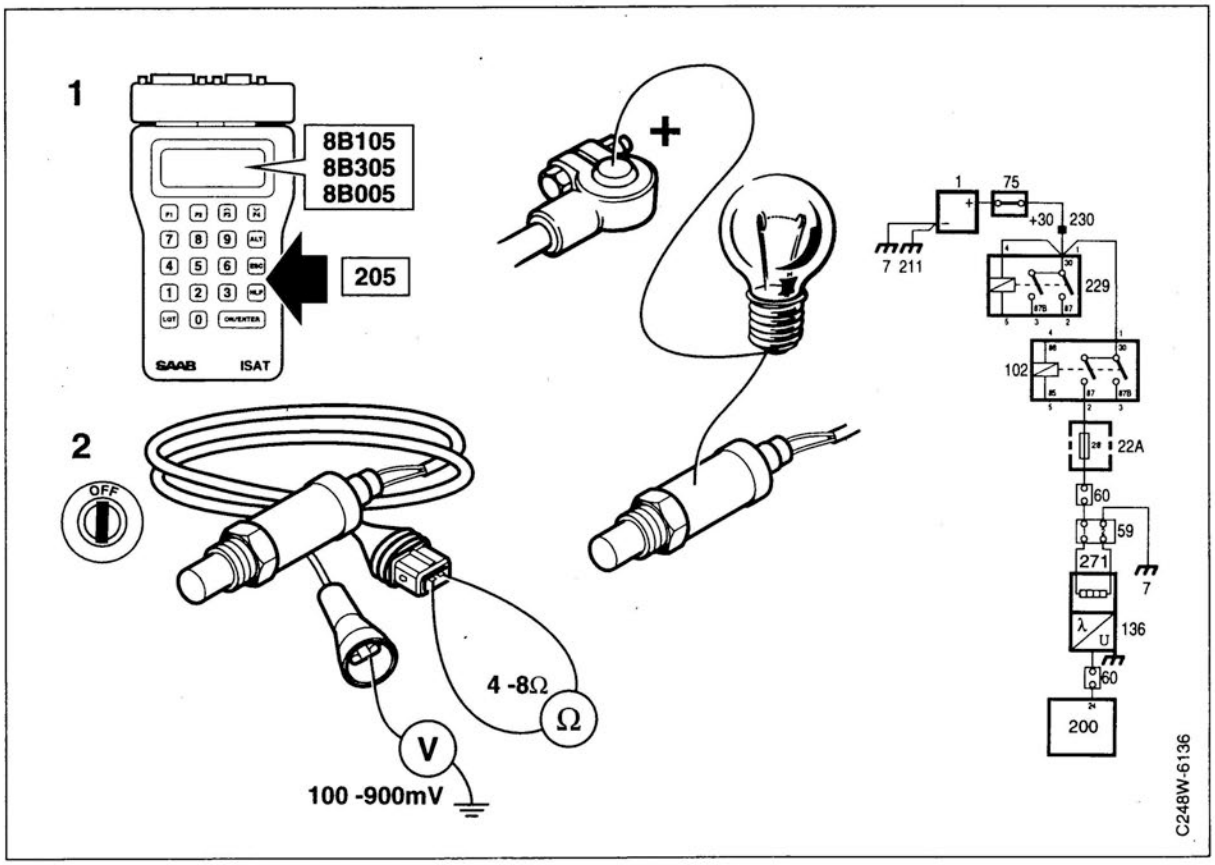
1
8B105
8B305
8B005
205
SAAB
ISAT
+
2
OFF
4 -8Ω
Ω
V
100 -900mV
1
75
+30
230
7 211
229
102
22A
60
59
271
7
136
60
200
C248W-6136

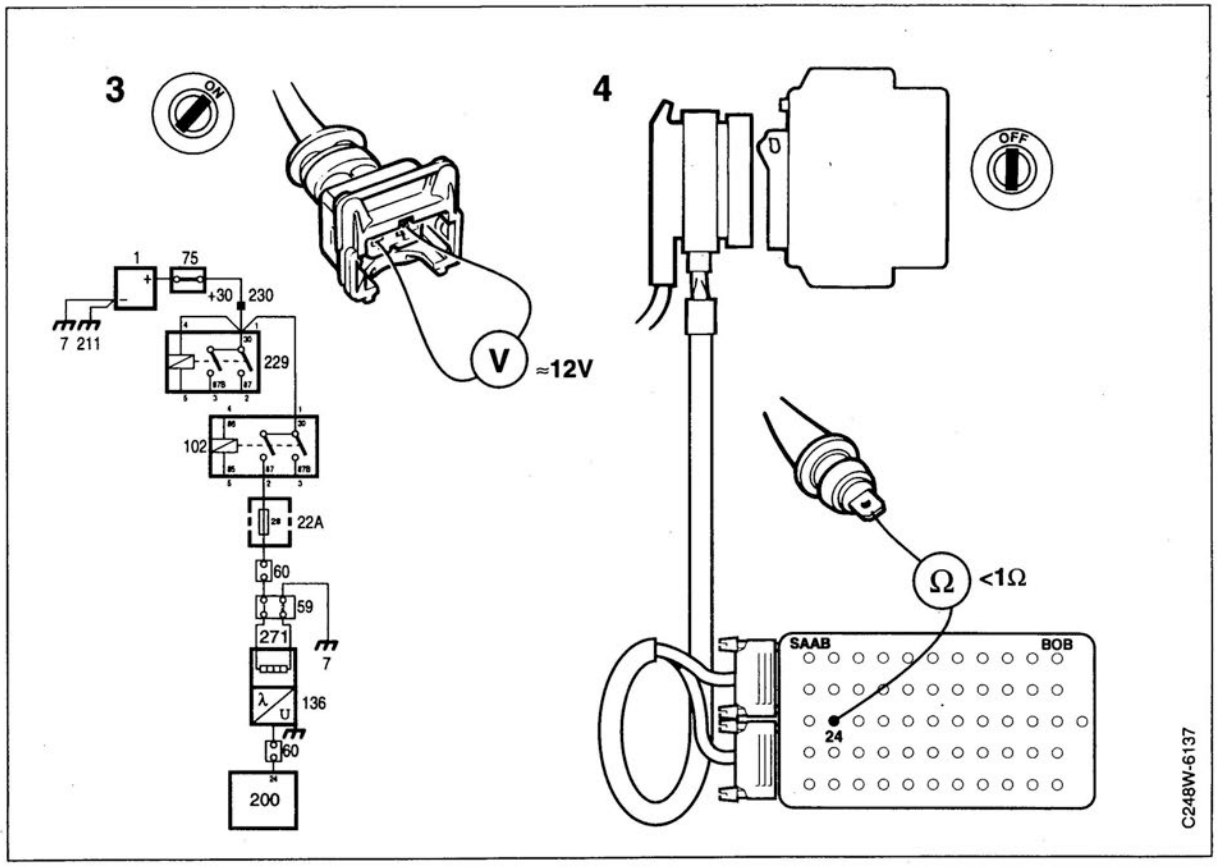
3
ON
1
75
+30
230
7 211
229
102
22A
60
59
271
7
136
60
200
V
≈12V
4
OFF
Ω
<1Ω
SAAB
BOB
24
C248W-6137

ISAT SCAN TOOL	**Cause of fault** Rich mixture, the oxygen sensor cannot regulate (integrator in end position).
Lamp-flash code	**Condition** Short-circuit to live component/lead (reacts to low voltage).
LH system test E020	**Fault symptom** CHECK ENGINE lamp (MIL) on. Engine running on rich mixture (for a certain period), black exhaust smoke.
Test data LH 2.2 Pin 20: 0.1 - 1.5 V varying	

Diagnostic procedure

1 Unplug the single-pole connector from the wiring harness.
Connect the multimeter (2 V d.c. range selected) to the oxygen sensor's black lead and ground.
Start the engine. The signal should oscillate between 0 and 1 V, where 0-0.4 V is a lean mixture and 0.6-1.0 V a rich mixture.
Since the signal in question varies with the fuel-air mixture, a lean mixture of the kind caused by a small vacuum leak, for instance, gives an oxygen reading of >1 and a sensor voltage of about 100 mV.
A rich mixture gives an oxygen reading of <1 and a sensor voltage of about 900 mV.
If these readings are not obtained, change the oxygen sensor.
If a signal is present, check the mounting of the oxygen sensor. A poor ground connection due to corrosion could be the cause of malfunctioning.
Connect a 12 V bulb and high power to the oxygen sensor body and battery positive (Batt+). The bulb should light up.
If is does not, remove the oxygen sensor and clean the threads.
With the ignition switch in the OFF position, unplug the oxygen sensor preheater connector and take a resistance reading across the oxygen sensor connections.
The resistance should be 4-8 ohms.
In the event of an open circuit or excessive resistance, change the oxygen sensor.
Useful tip
Run an extra ground lead from the oxygen sensor's outer casing (secured with a hose clip) to engine reference grounding point G7 on the lifting eye.

2 Check that battery voltage is present across the pins in the oxygen sensor connector.
If voltage is present, go to point 3.
If it is not, check
- oxygen sensor fuse 28
- the lead between pin 1 of the oxygen sensor connector and fuse 28.
- the lead between pin 2 of the oxygen sensor connector and ground.

3 Plug the Breakout Box into the car's wiring harness, LH control module not connected.
Check the lead between pin 20 of the control module and the oxygen sensor.

4 If the fault persists in spite of the above checks, change the oxygen sensor and check its operation once again.

5 Try fitting a new control module, see page 61.

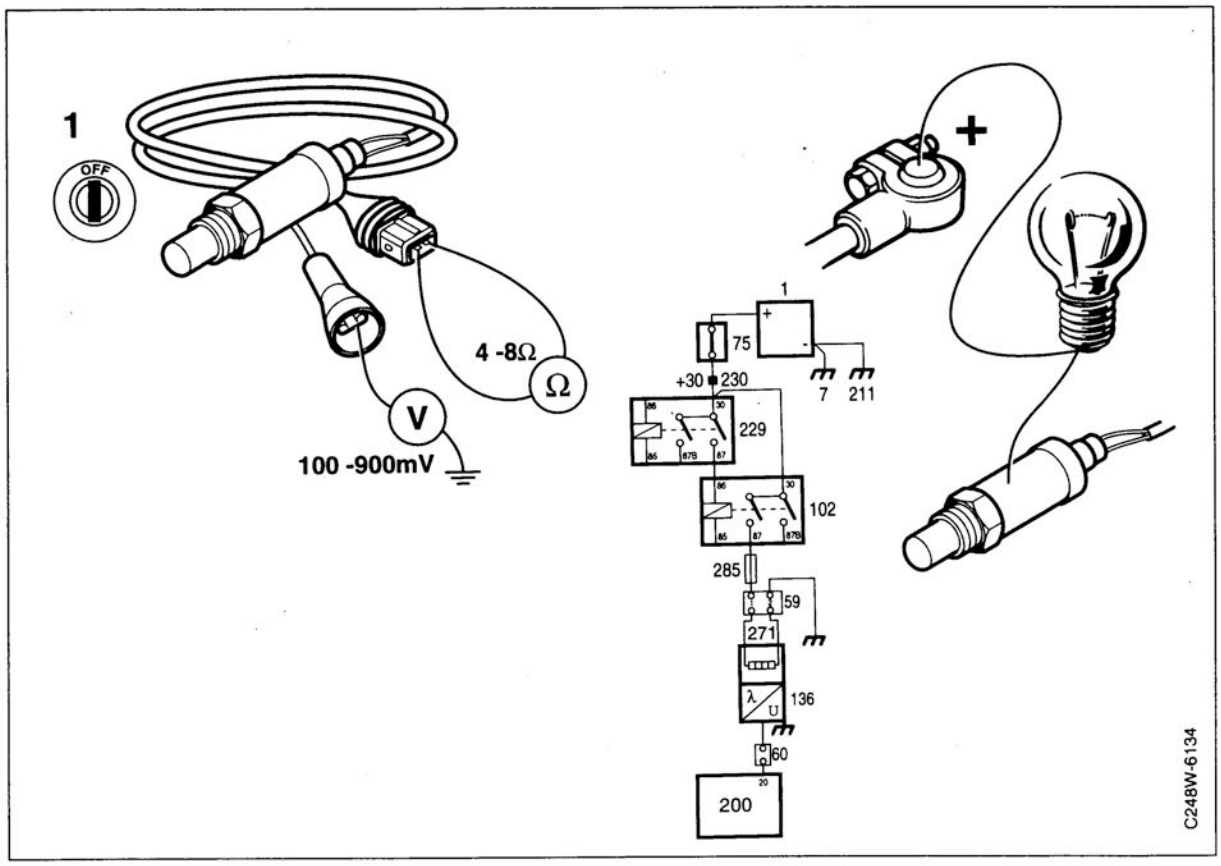
1
OFF
4 -8Ω
Ω
V
100 -900mV
+
1
75
+30
230
7
211
229
102
285
59
271
136
60
20
200
C248W-6134

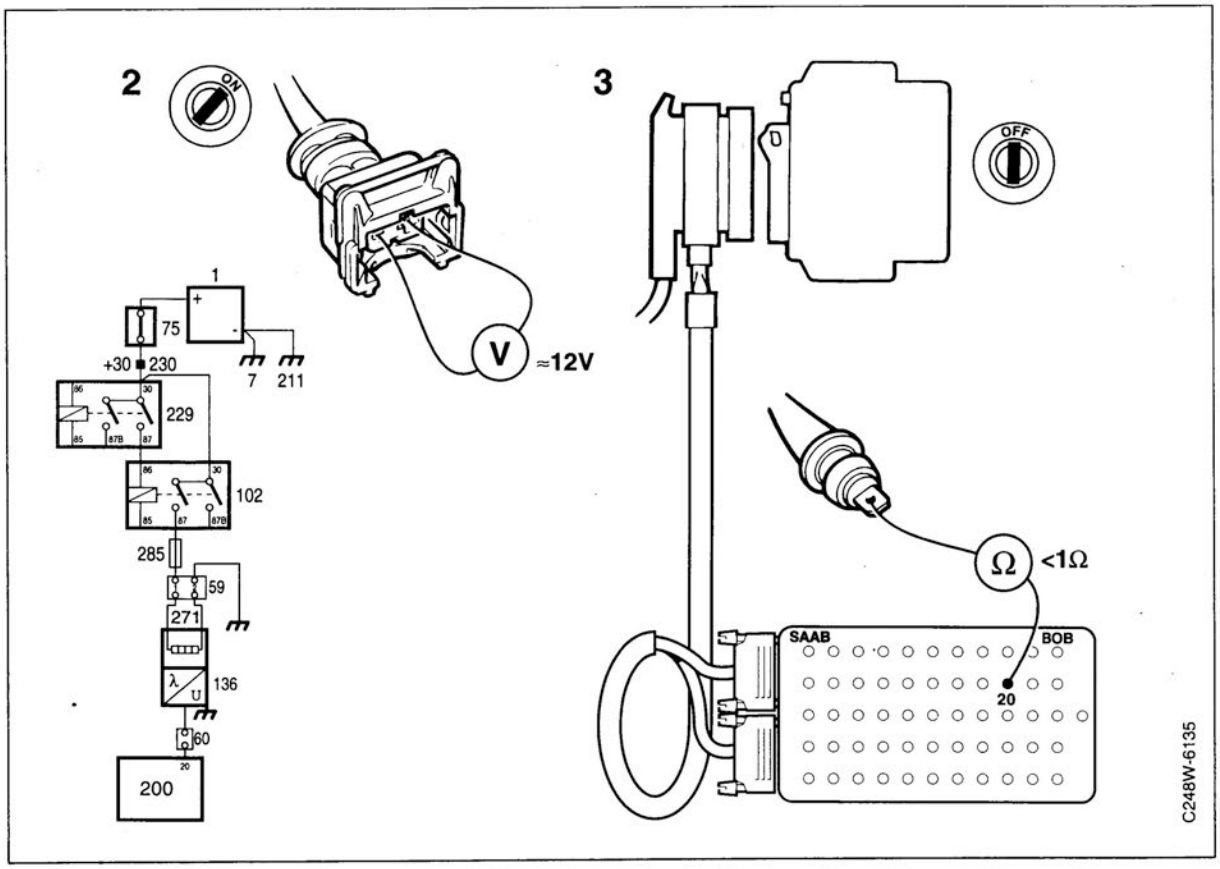
2
ON
V
≈12V
1
75
+30
230
7
211
229
102
285
59
271
136
60
20
200
3
OFF
Ω
<1Ω
SAAB
BOB
20
C248W-6135

ISAT SCAN TOOL	Cause of fault
1) 42441/22441 2) 42442/22442 3) 42451/22451 4) 42452/22452	1). Fuel-air mixture too rich at idle speed, additive factor on account of air leakage. 2). Fuel-air mixture too rich when car is being driven, multiplicative factor caused by mass air flow sensor, injectors, fuel pressure regulator. 3). Fuel-air mixture too lean at idle speed on account of air leakage. 4). Fuel-air mixture too rich at idle speed caused by mass air flow sensor, injectors, fuel pressure regulator.
Lamp-flash code 1, 3) 12112 2, 4) 12111	**Condition** Detected if adaptation levels are above or below given values/limits.
LH system test	**Fault symptom** The CHECK ENGINE lamp (MIL) may be on.
Test data	

Since adaptation codes have extremely close tolerances, diagnostic trouble codes may be erroneously generated even though no faults actually exist.

To avoid unnecessary and costly component replacement and fault diagnosis procedures, try clearing and zeroizing the functions in the LH control module.

If a diagnostic trouble code is generated even though a fault cannot be determined, try the tip given below (in certain cases it may even improve drivability).

Important

During the car's running-in period (up to 500 km), one or more of these diagnostic trouble codes may be generated even though no fault actually exists.

In such case, carefully check whether the DTC is generated afresh after it has been cleared.

Diagnostic procedure

For diagnostic trouble codes 42441/22441 and 42451/22451, see point 1.

For diagnostic trouble codes 42442/22442 and 42452/22452, see point 2.

1 Check the induction system for leaks by listening for the sound of escaping air.

2 Check the fuel pressure and operation of the fuel pressure regulator.
Relative to the pressure in the intake manifold, fuel pressure should be:
-3.0 bar (all LH 2.4.2 except 9000T without cat.)
-2.5 bar (LH 2.4, 9000T)
-2.8 bar (LH 2.4.2, 9000T without cat.)
-3.0 bar (LH 2.4, 9000i)
If the fuel pressure is not OK, change the fuel pressure regulator.

3 Change the LH control module, see page 61

Useful tip

Run an extra ground lead from the oxygen sensor's outer casing (secured with a hose clip) to engine reference grounding point G7 on the lifting eye.

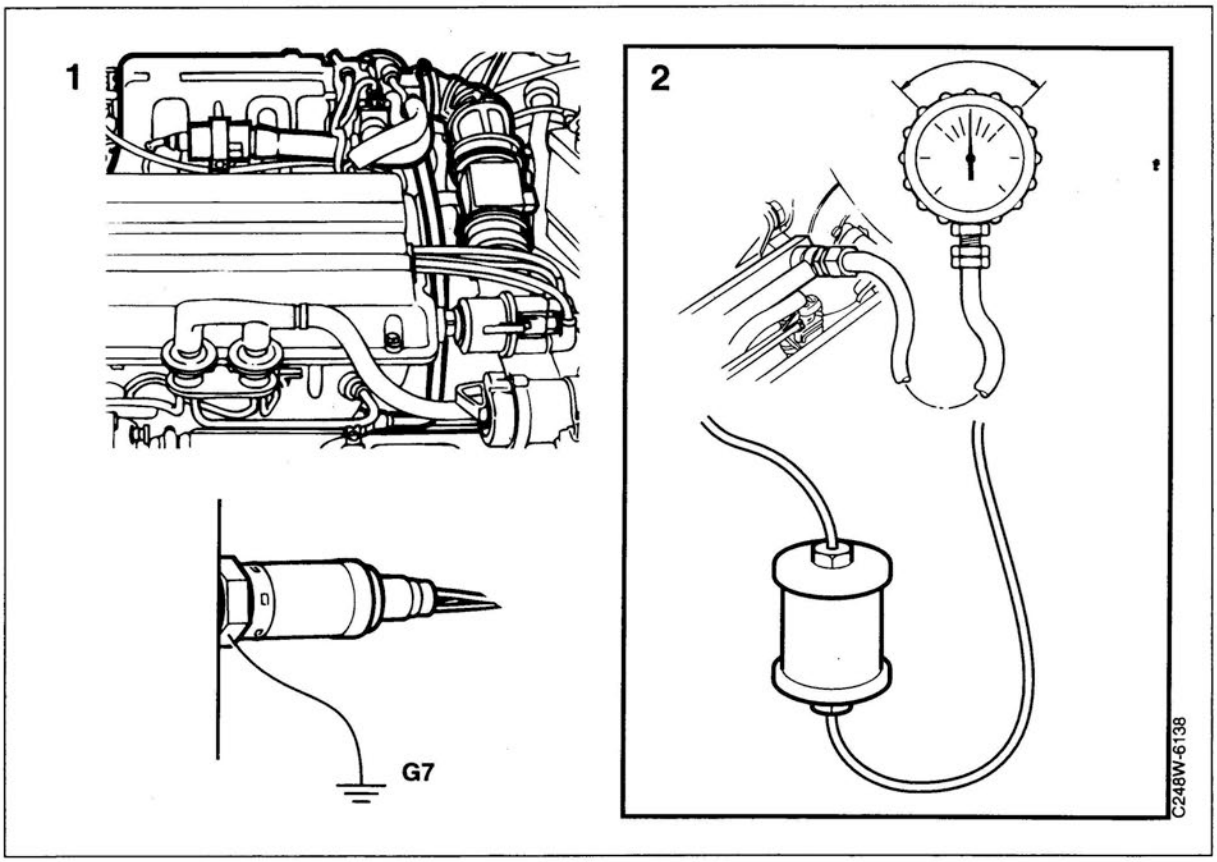
1
G7
2
C248W-6138

ISAT SCAN TOOL 44221/24221	**Cause of fault** No engine speed pulses, no engine speed signal from ignition system.
Lamp-flash code 12254 - Open circuit while car being driven 12231 - 1st fault on starting	**Condition** No engine speed pulses during starter motor cranking or open circuit while car being driven.
LH system test E001	**Fault symptom** Engine will not start or starts and then stops.
Test data LH 2.4, 2.4.1, 2.4.2 Pin 1: 6 V during starter motor cranking. >8 V at idling speed. LH 2.2 Pin 1: 6 V during starter motor cranking. >8 V at idling speed. or, for M1985, pulses from ignition coil <400 V.	

Diagnostic procedure

1 If an ISAT scan tool is not used, go to point 2.
LH 2.4 (M1990-), 2.4.1 and 2.4.2.
Connect the ISAT scan tool. Select command code 207. Check whether ignition pulses are obtained.
If pulses are present (8B107), change the control module.
If no pulses are present (8B007), go to point 2.

2 Plug the Breakout Box into the car's wiring harness, LH control module not connected.

3 Check that current is present on pin 1 of the control module at the same time as the starter motor is run.
If current is present, change the control module.
If it is not, check the lead between pin 1 of the LH control module and the respective ignition system (ignition coil pin 1, ignition pulse amplifier pin 7, DI/APC control module pin 29, EZK control module pin 17, ignition power module pin TD-0).

4 If the lead is OK, continue fault diagnosis as described in the "Fault diagnosis" section of Service Manual 3:1.

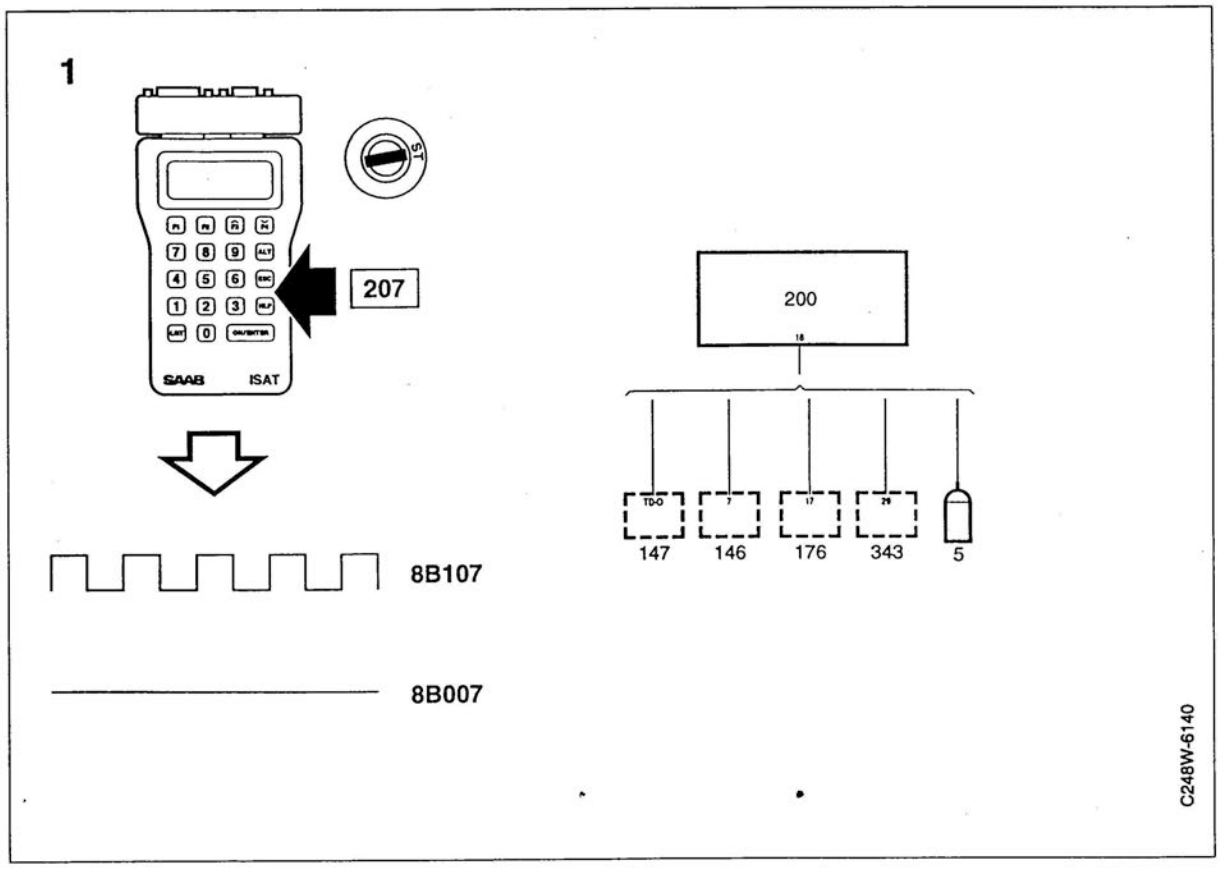
1
ST
SAAB
ISAT
207
200
TD-O
147
146
176
343
5
8B107
8B007
C248W-6140

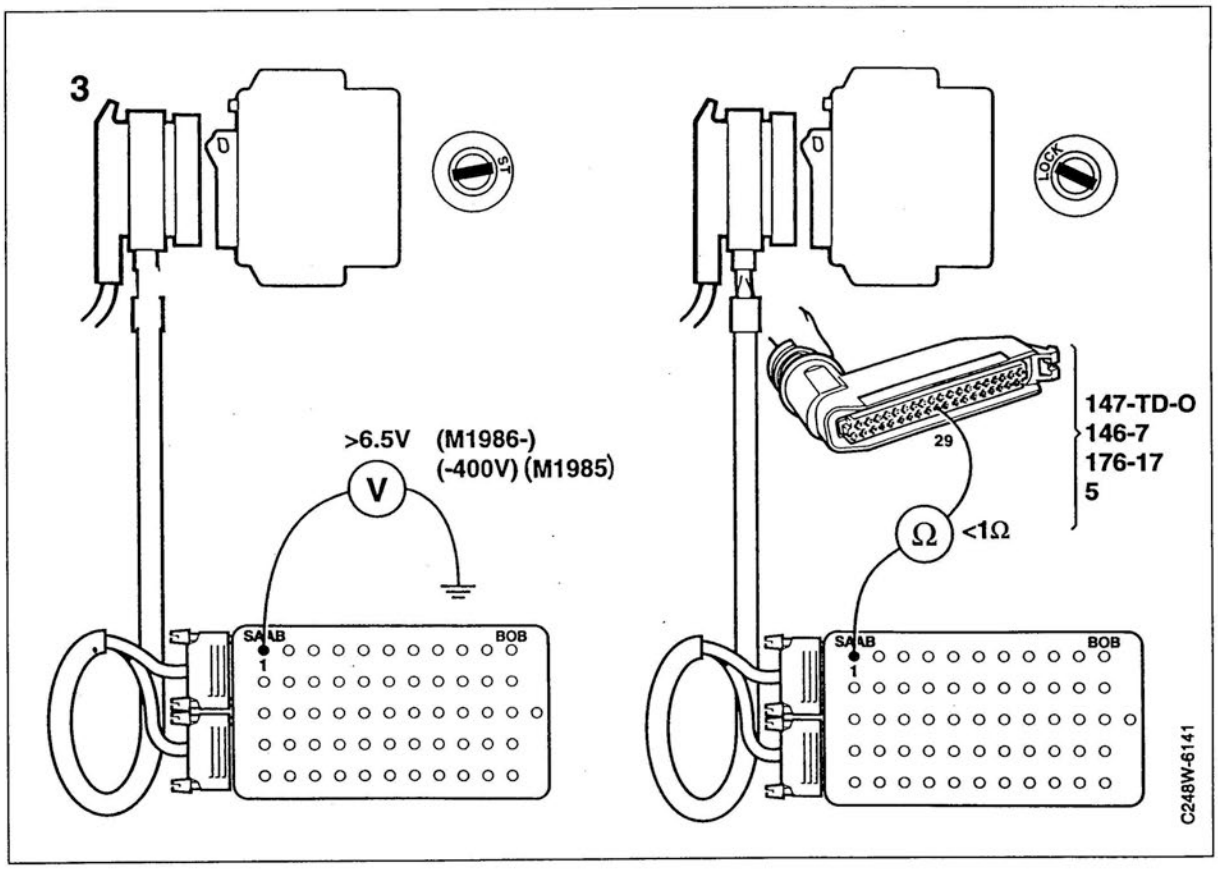
3
ST
LOCK
>6.5V (M1986-)
(-400V) (M1985)
V
SAAB
BOB
1
29
147-TD-O
146-7
176-17
5
Ω
<1Ω
C248W-6141

ISAT SCAN TOOL 44261/24261	Cause of fault Speed signal absent or incorrect.
Lamp-flash code 12243	**Condition** Engine speed above 2,000 rpm and high engine load for min. 3 sec.
LH	**Fault symptom** Engine stalls in stop-and-go traffic. Incorrect idle speed control (Limp Home). Faulty Shift-up function. Incorrect boost pressure. A/C compressor does not work (LH 2.4.2).
Test data Pin 34: ~6 V when wheels rotating. 0 V or 12 V when wheels stationary.	

Diagnostic procedure

1 Check that the speedometer is in working order and that the EDU shows plausible fuel consumption figures.
If the speedometer does not work, check the wiring and sensor.
Unplug the sensor's two-pin connector and measure the signal voltage from the speed sensor on the gearbox. The multimeter should be set for a.c.
When speed is increased the signal voltage should increase over a range of 0-5 V.
If the wiring and sensor are OK, change the speedometer.
If a varying voltage is not obtained, check the operation of the sensor (drive).

2 **If the speedometer is OK but the EDU shows implausible fuel consumption figures,** unplug the connector from the speedometer. Check:
- pin 1 - 3 = 12 V
- pin 1 - ground = 12 V
- pin 3 - ground = <1 ohm

If incorrect readings are obtained, check the wiring.

3 Remove the centre pin from the speedometer connector. Plug the connector into the speedometer.
Take a reading across pins 2 and 3 at the same time as a wheel is rotated. A reading of ~6 V or 0/12 V should be obtained. If the voltage reading is not OK, change the speedometer.
If the voltage reading is OK, unplug the EDU connector. Connect a Breakout Box to the car's wiring harness, LH control module not connected. Check the lead between pin 2 of the speedometer connector and pin 34 of the Breakout Box.

4 **If the speedometer is OK and the EDU shows plausible fuel consumption figures,** connect the Breakout Box to the car's wiring harness, LH control module not connected. With the ignition switched on, rotate a wheel. Check that 0/12 V or 6 V pulses are obtained on pin 34 of the Breakout Box.
If pulses are obtained, change the control module. See page 61.
If pulses are not obtained, go to point 5.

5 Take a reading across pin 34 of the Breakout Box and pin 2 of the speedometer connector (connector not plugged into speedometer). Also check the lead's crimped connections.

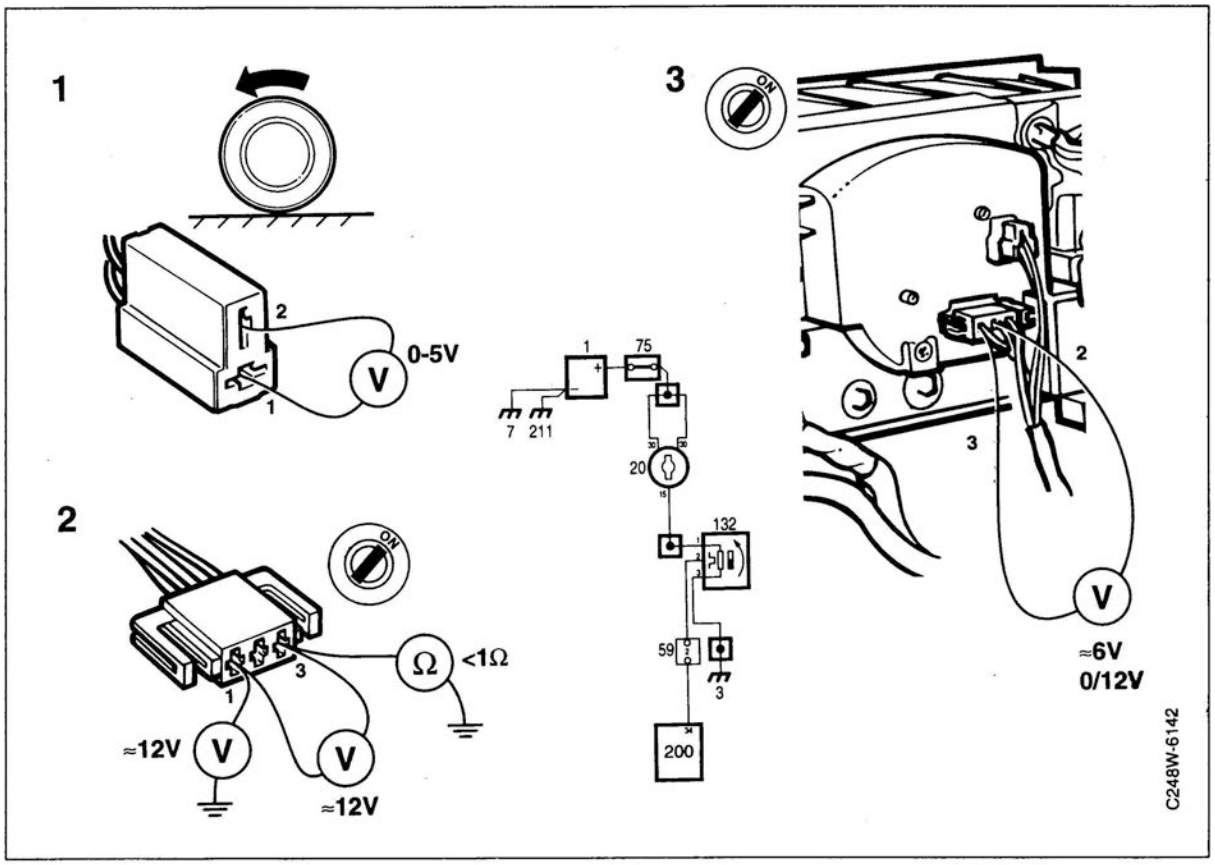
1
2
1
0-5V
V
3
ON
2
3
V
≈6V
0/12V
1
75
7 211
20
132
59
3
200
2
ON
3
1
Ω
<1Ω
≈12V
V
V
≈12V
C248W-6142

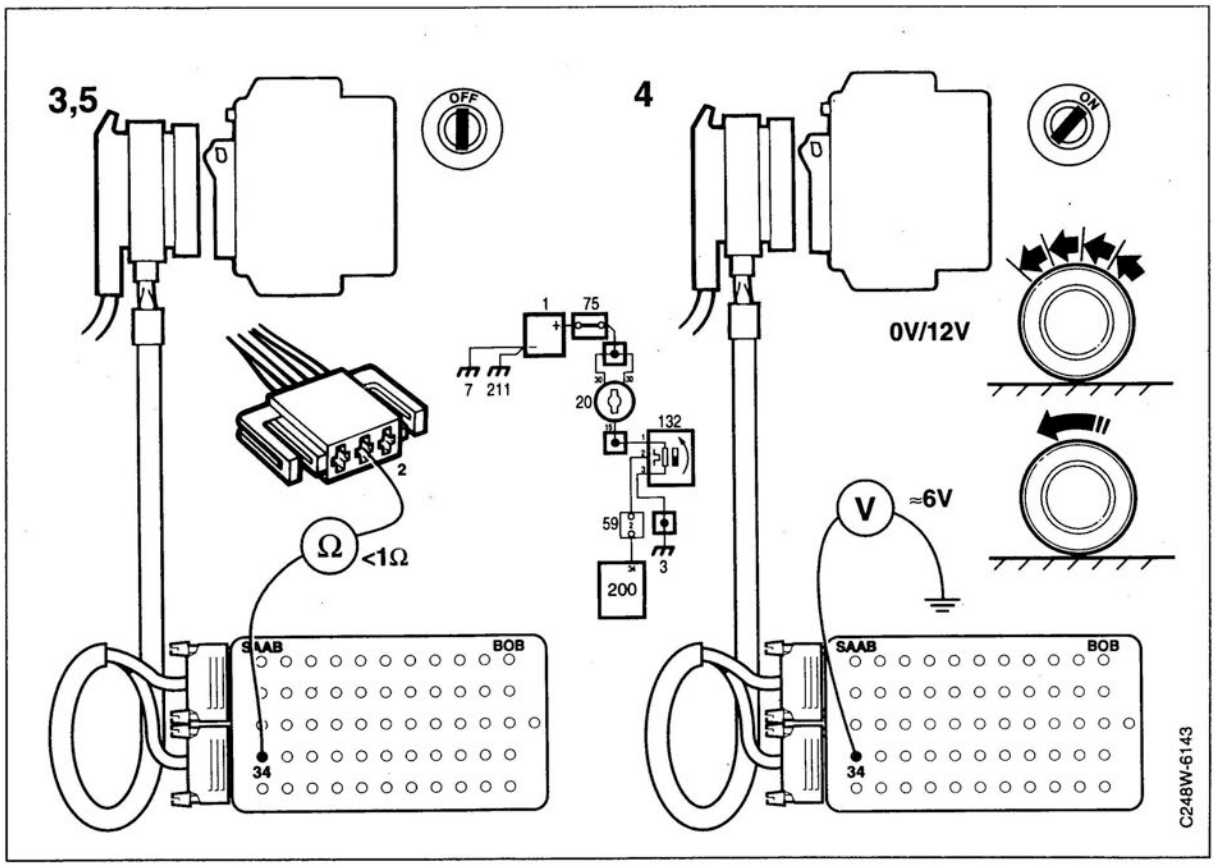
3,5
OFF
2
Ω
<1Ω
SAAB
BOB
34
1
75
7 211
20
132
59
3
200
4
ON
0V/12V
V
≈6V
SAAB
BOB
34
C248W-6143

ISAT SCAN TOOL 44671/24671 (not LH 2.2)	**Cause of fault** Open circuit/short-circuit in signal from the DI system.
Lamp-flash code 12253 (not LH 2.2)	**Condition** Detected if no signal received from the DI system for more than 20 s.
LH system test E328	**Fault symptom** Uneven running, poor drivability, impaired performance, black exhaust smoke, engine stalls, high fuel consumption.
Test data Pin 28: PWM signal about 6.5 V at idling speed. Pin 20: PWM signal about 6.5 V at idling speed (LH 2.2).	

Diagnostic procedure

1 Connect the Breakout Box. Start the engine and run it at idling speed. Check that the voltage across pin 28 of the LH control module (pin 20 for LH 2.2) and ground is about 6.5 V.

2 If it is not, switch off the engine. Unplug the Breakout Box and the DI/APC control module connector. Check the lead between pin 28 of the control module (pin 20 for LH 2.2) and pin 26 of the DI/APC control module connector for continuity or shorting.

3 Continue with further fault diagnosis, if necessary, as described in "Fault diagnosis DI/APC".

jxh

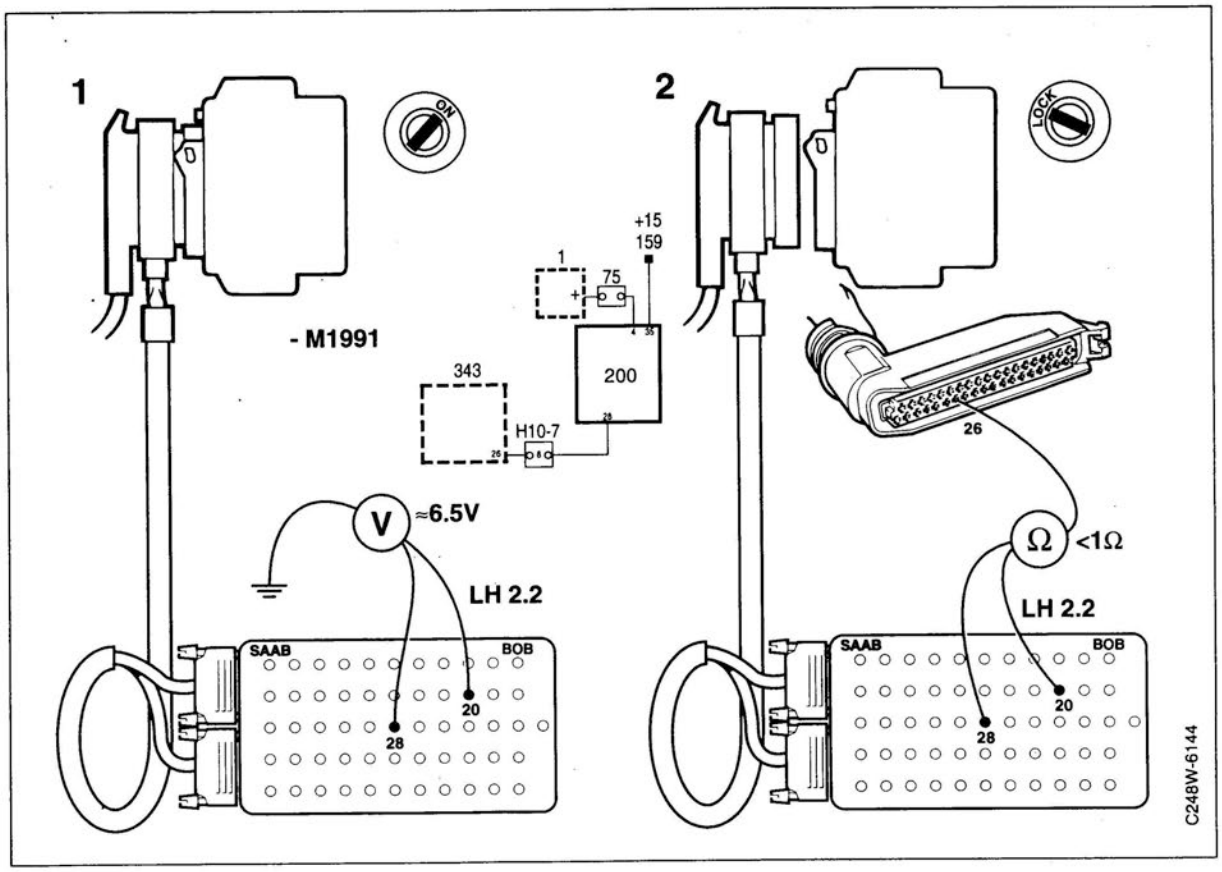
1
2
ON
LOCK
+15
159
1
75
200
343
H10-7
- M1991
V
≈6.5V
LH 2.2
SAAB
BOB
28
20
26
Ω
<1Ω
LH 2.2
SAAB
BOB
28
20
C248W-6144

ISAT SCAN TOOL 45641/25641 45651/25651 45691/25691	**Cause of fault** Signal from mass air flow sensor too high. Signal from mass air flow sensor too low. Signal from mass air flow sensor too high/low.
Lamp-flash code 12221	**Condition** Signal from the mass air flow sensor in end position, i.e. short-circuited to ground or battery positive (+) or open circuit.
LH system test E207 E107 E007	**Fault symptom** CHECK ENGINE lamp (MIL) on. Poor drivability, engine troublesome to start, high fuel consumption. Often gives rise to consequential faults.
Test data Across pins 7 and 6: 1.2-5.0 V, depending on engine load.	

Diagnostic procedure

A condition for carrying out the work described in the following is that the mass air flow sensor's burn-off function is in working order. If it is not, see "Filament burn-off, checking operation" on page 164.

1 **-M1989.** Check the voltage level of the signal from the mass air flow sensor with the LH tester or manually by taking readings directly at the connector or with the aid of a Breakout Box.
M1990-. Use an ISAT scan tool. Select command code 22A and check that the following is shown on the ISAT scan tool's display:
- 801.2 ~1,2 V at idling speed
- 805.0 ~5.0 V at wide open throttle.

2 Read off the voltage on the LH tester. It should be 1.2-1.5 V at idling speed.
Alternatively, take a voltage reading across pins 2 and 3 (pins 3 and 5 for a mass air flow sensor of aluminium).
Alternatively, take a voltage reading across pins 6 and 7 on the Breakout Box.
If the voltage reading obtained is correct, unplug the connector from the mass air flow sensor and check that the power supply and ground connection are OK. With the ignition switched on, battery voltage should be obtained across pins 1 and 5 (or pins 2 and 4).
If the voltage reading obtained is correct, change the mass air flow sensor.
If it is not, go to point 3.

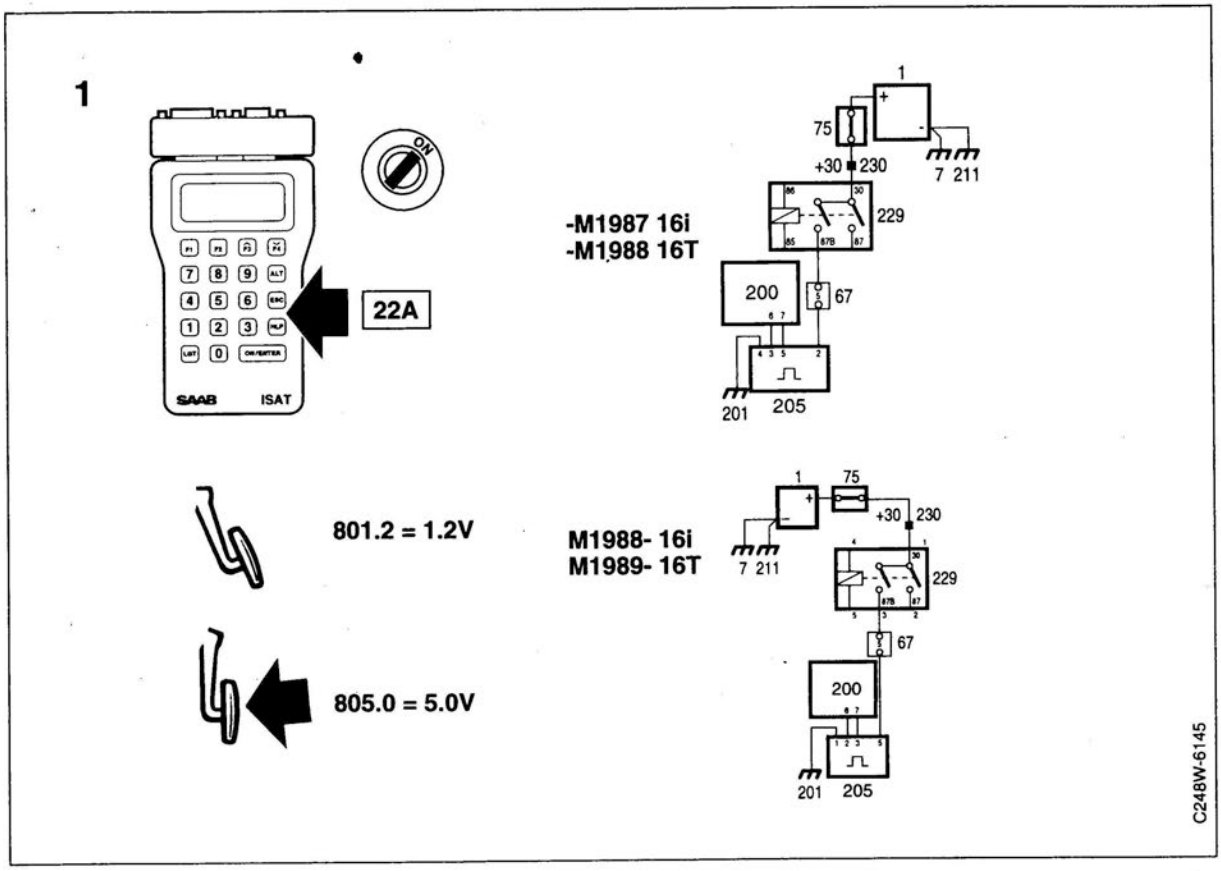
1
ON
SAAB
ISAT
22A
-M1987 16i
-M1988 16T
75
+30
230
229
200
67
205
201
7 211
801.2 = 1.2V
805.0 = 5.0V
M1988- 16i
M1989- 16T
C248W-6145

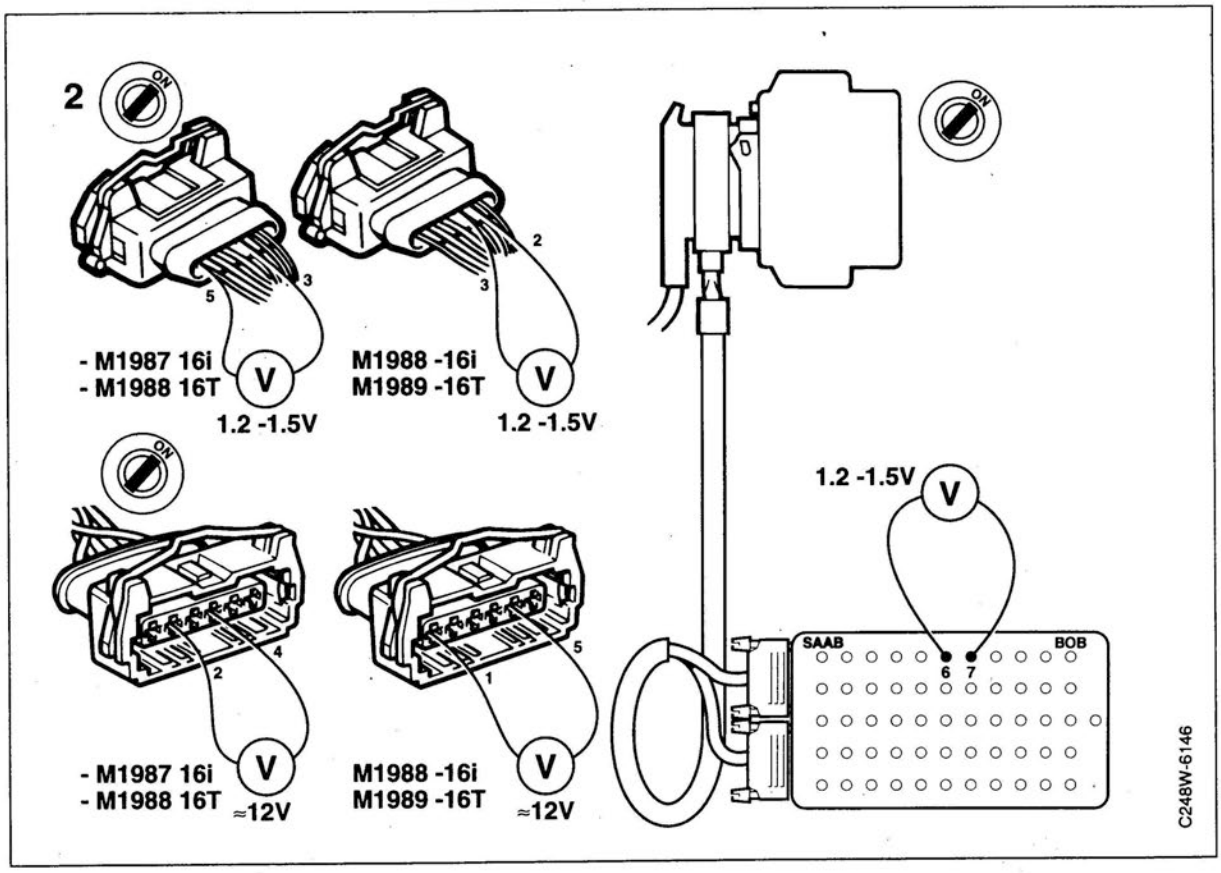
2
ON
- M1987 16i
- M1988 16T
1.2 -1.5V
M1988 -16i
M1989 -16T
1.2 -1.5V
- M1987 16i
- M1988 16T
≈12V
M1988 -16i
M1989 -16T
≈12V
SAAB
BOB
C248W-6146

ISAT SCAN TOOL	Cause of fault
45641/25641	Signal from mass air flow sensor too high.
45651/25651	Signal from mass air flow sensor too low.
45691/25691	Signal from mass air flow sensor too high/low.
Lamp-flash code	**Condition**
12221	Signal from the mass air flow sensor in end position, i.e. short-circuited to ground or battery positive (+) or open circuit.
LH system test	**Fault symptom**
E207 E107 E007	CHECK ENGINE lamp (MIL) on. Poor drivability, engine troublesome to start, high fuel consumption. Often gives rise to consequential faults.
Test data	
Across pins 7 and 6: 1.2-5.0 V, depending on engine load.	

3 Check the lead between pin 5 of the mass air flow sensor connector (pin 2 for a mass air flow sensor of aluminium) and pin 87B of the main relay. Also check the operation of the relay and the ground lead from pin 1 (or pin 4) to the engine grounding point.

4 Connect the Breakout Box to the car's wiring harness. LH control module connected. Start the engine (idling speed). Take a voltage reading across pins 6 and 7. A reading of 1.2-1.5 V should be obtained.
If the voltage is correct, change the control module. See page 61.
If the voltage is not correct, unplug the connector from the mass air flow sensor (LH control module not connected). Check the lead between pin 6 of the Breakout Box and pin 2 of the mass air flow sensor connector (pin 3 for a mass air flow sensor of aluminium). Also check the lead between pin 7 of the Breakout Box and pin 3 (or pin 5) of the mass air flow sensor connector.

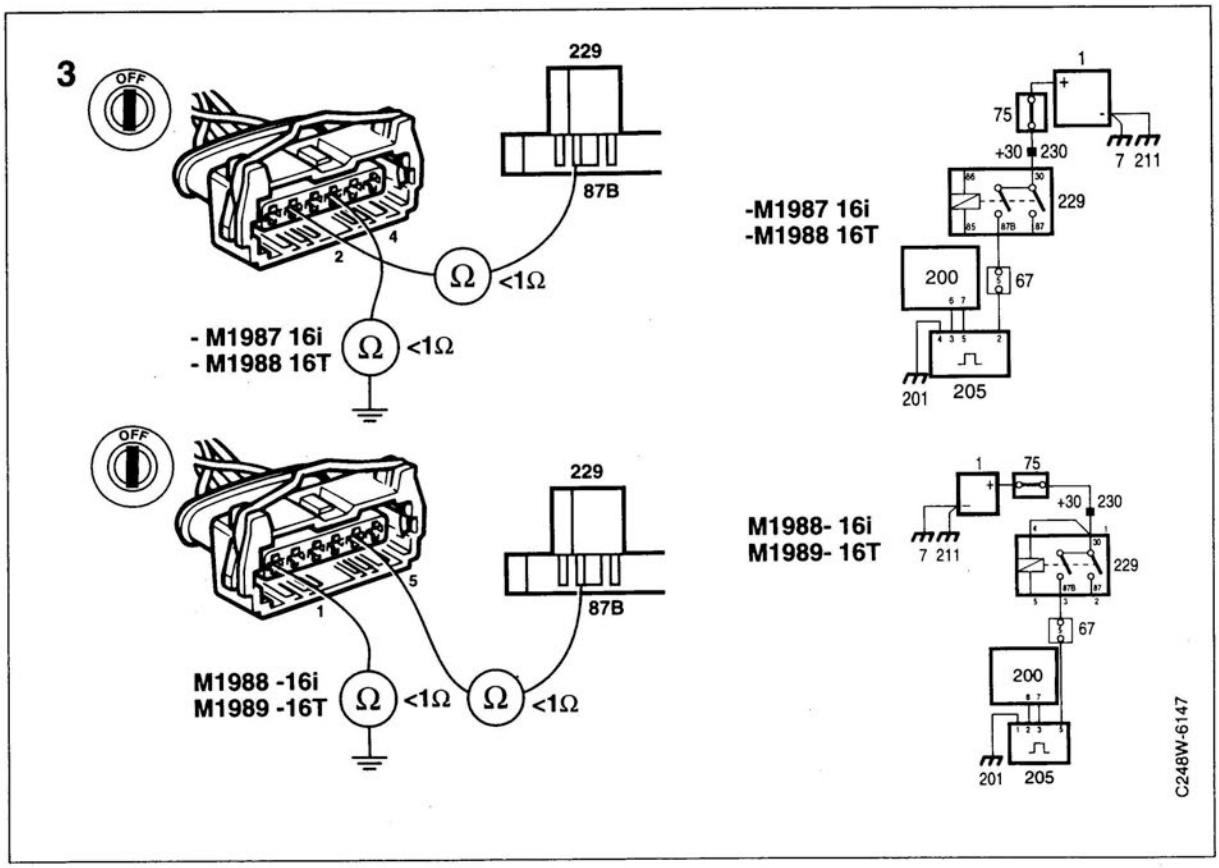
3
OFF
229
87B
2
4
Ω
<1Ω
- M1987 16i
- M1988 16T
Ω
<1Ω
-M1987 16i
-M1988 16T
1
75
+30
230
7 211
229
200
67
201
205
OFF
229
87B
1
5
M1988 -16i
M1989 -16T
Ω
<1Ω
Ω
<1Ω
M1988- 16i
M1989- 16T
1
75
+30
230
7 211
229
67
200
201
205
C248W-6147

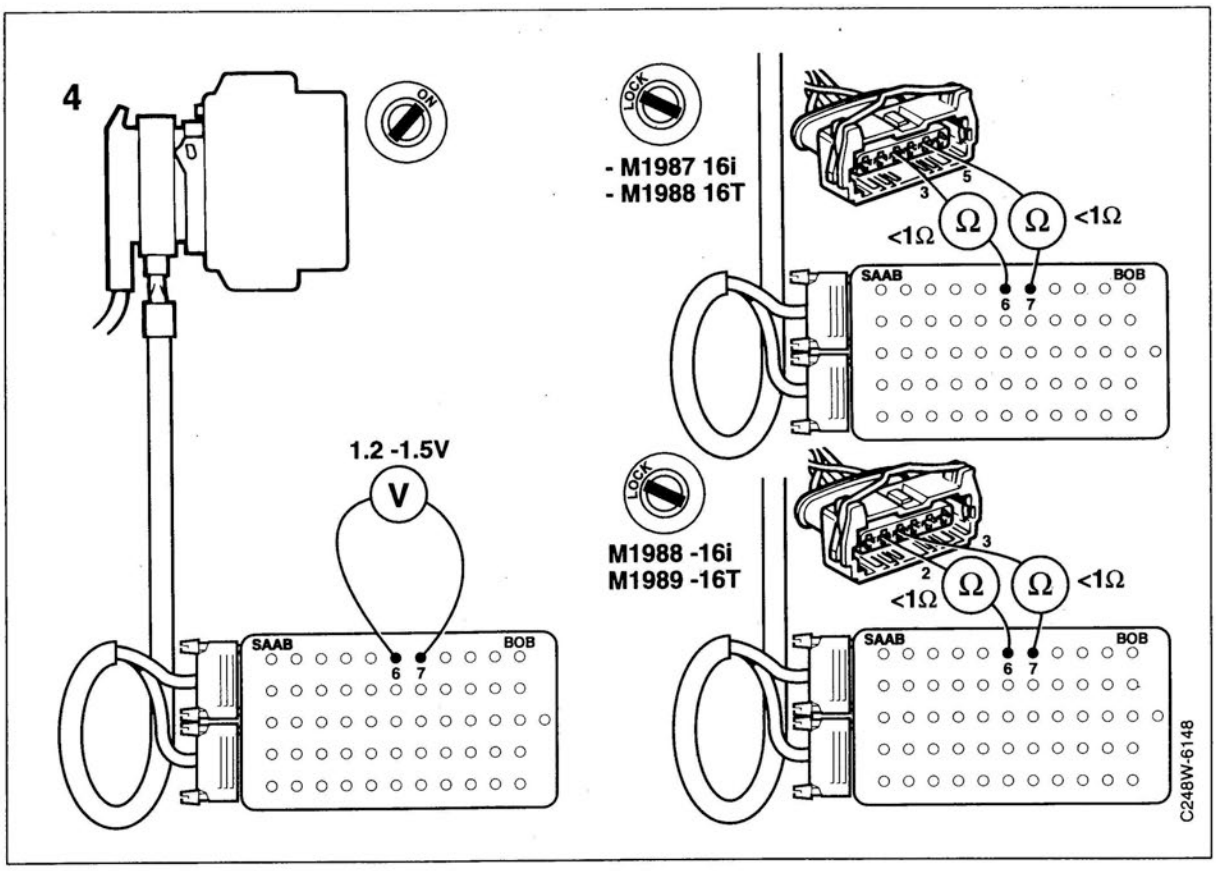
4
ON
1.2 -1.5V
V
SAAB
BOB
6
7
LOCK
- M1987 16i
- M1988 16T
3
5
<1Ω
Ω
Ω
<1Ω
SAAB
BOB
6
7
LOCK
M1988 -16i
M1989 -16T
3
2
<1Ω
Ω
Ω
<1Ω
SAAB
BOB
6
7
C248W-6148

ISAT SCAN TOOL 45723/25723	**Cause of fault** DRIVE signal absent or incorrect.
Lamp-flash code 12244	**Condition** Engine speed above 2,000 rpm and high engine load for 3.5 sec. (speed higher than 50 km/h).
LH system test	**Fault symptom** Drop in idling speed, low engine rpm when selector lever moved to R, D, 1, 2, 3.
Test data LH 2.4, 2.4.1, 2.4.2 Pin 30: Battery voltage when automatic transmission selector lever in R, D, 1, 2, 3 0 V in P, N and for manual gearbox. LH 2.2 Pin 4: Battery voltage when automatic transmission selector lever in R, D, 1, 2, 3 0 V in P, N and for manual gearbox.	

Diagnostic procedure

1 Select command code 203 on the ISAT scan tool and check that the following is shown on the display:
- With the selector lever in D: 8B103 (activated)
- With the selector lever in P or N: 8B003 (not activated)

Alternatively, component testing can be carried out by means of self-diagnostics or an LH tester.

2 Check fuse 9.

3 Connect a Breakout Box to the car's wiring harness. LH control module not connected. With the selector lever in D, check that battery voltage is present on pin 30 of the LH control module (pin 4 for LH 2.2).

4 If it is not, check the lead between pin 30 of the LH control module (pin 4 for LH 2.2) and pin 4 of the selector lever switch.
Check that battery voltage is present on pin 3 of the selector lever switch.
If it is not, check the lead between the switch and the fuse and also the lead between the fuse and the +54 distribution terminal.
With the selector lever in D, check that battery voltage is present on pin 4 of the selector lever switch.
If it is not, but voltage is present on pin 3, change the selector lever switch.

5 If voltage is present, check the idle air control valve (in cases where a diagnostic trouble code is not generated), see page 175.
If the IAC valve is OK, change the control module. See page 61.

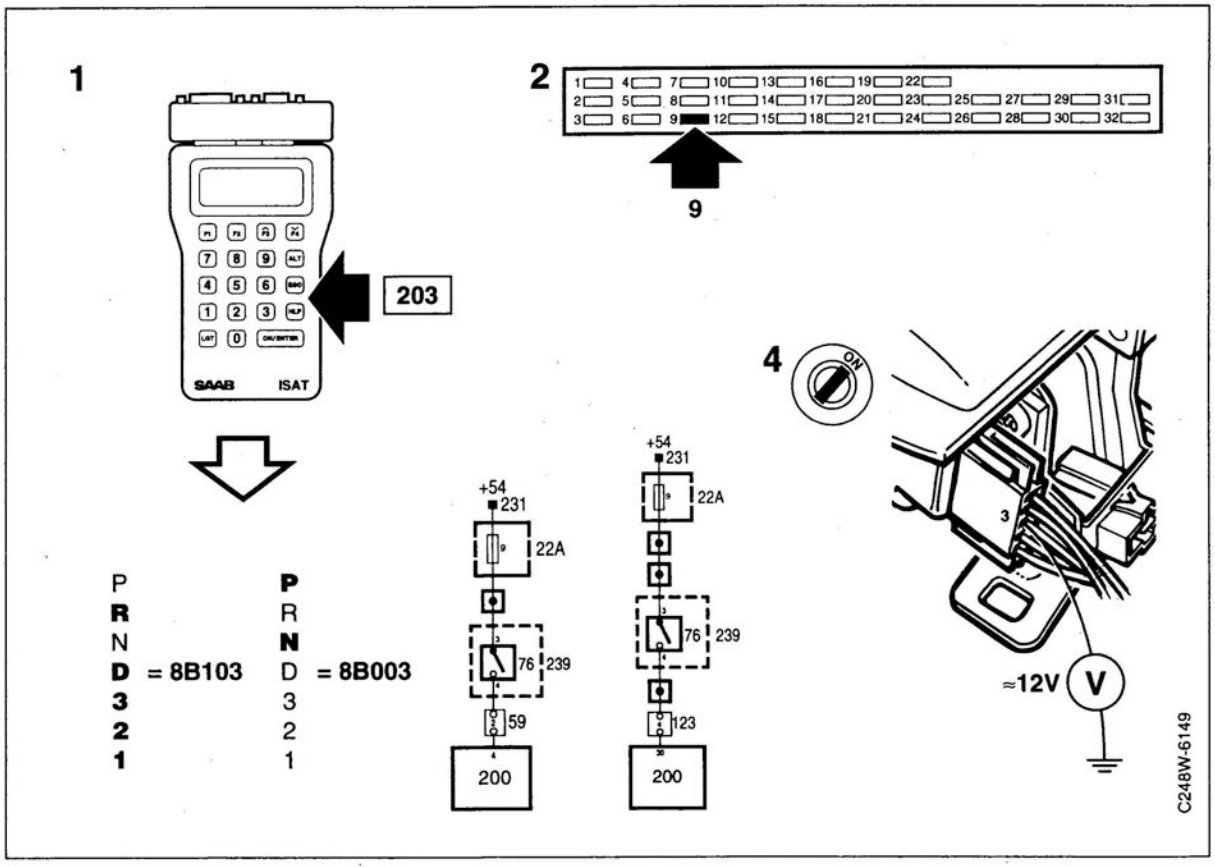
1
SAAB
ISAT
203
2
9
4
ON
P
R
N
D
3
2
1
= 8B103
= 8B003
+54
231
22A
76
239
59
123
200
≈12V
V
3
C248W-6149

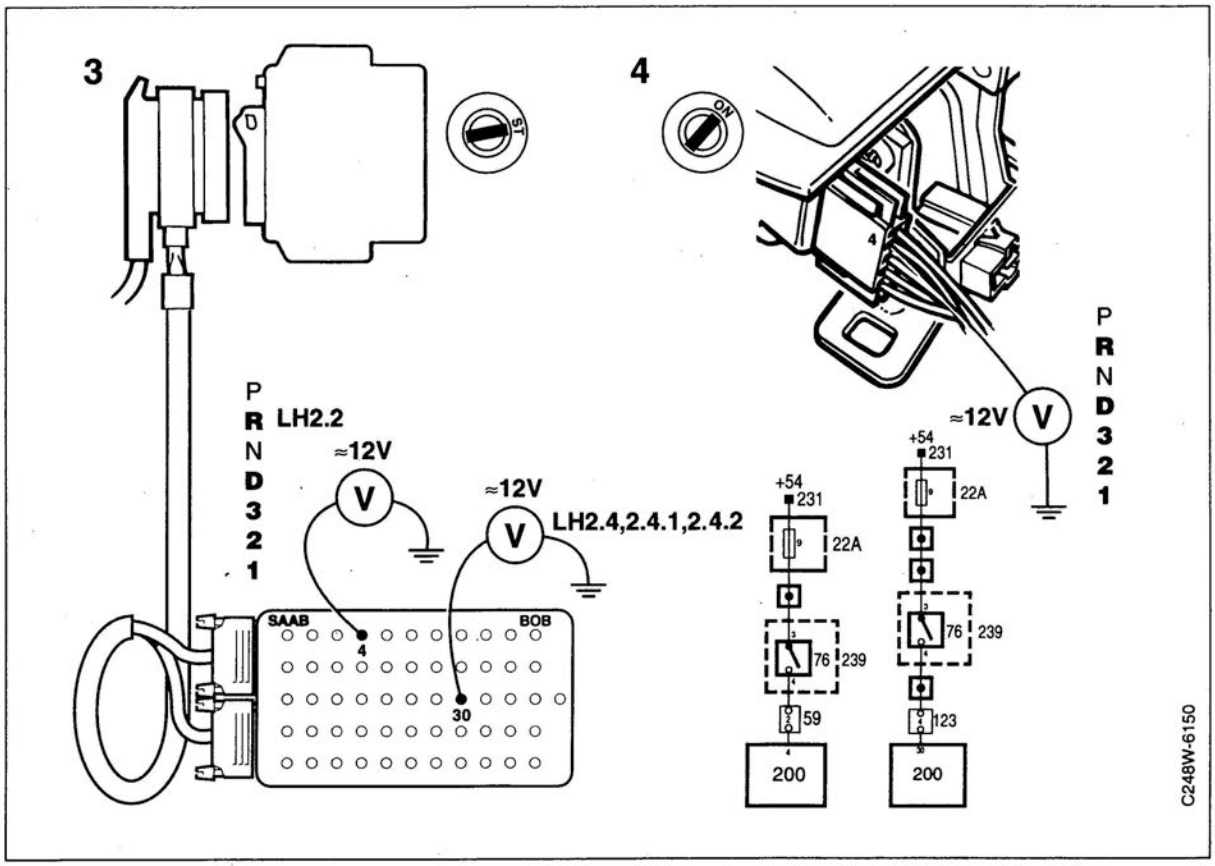
3
ST
4
ON
P
R
N
D
3
2
1
LH2.2
≈12V
V
LH2.4,2.4.1,2.4.2
SAAB
BOB
30
+54
231
22A
76
239
59
123
200
C248W-6150

ISAT SCAN TOOL	Cause of fault
45771/25771 (closed throttle position, indicated while car is being driven) 45772/25772 (full load)	Signal from throttle position sensor absent or short-circuited to ground or battery.
Lamp-flash code	**Condition**
12212 12213 12251 (level of signal from position sensor too high/low).	Position sensor indicates closed throttle position while car being driven. Position sensor indicates closed throttle position and full load simultaneously at idling speed. Engine temperature above 80°C.
LH system test	**Fault symptom**
E102 E103	CHECK ENGINE lamp (MIL) on. Idle speed control not in proper working order. Full-load enrichment at full load absent or constant.
Test data Pin 2: 0.2 V at idling speed/4 V at wide open throttle. Pin 10: 5 V when position sensor not connected.	

Diagnostic procedure, LH 2.4.2

1 With the ignition switch in the Drive position, select command code 279 on the ISAT scan tool. The following throttle positions should be shown on the display:
- 80085 = about 85° (open, wide open throttle position)
- 80000 = about 0° (closed, idling speed).
Alternatively, component testing can be carried out by means of the self-diagnostics function.

2 Unplug the position sensor connector, take a resistance reading across pins 1 and 3 of the position sensor connector.
The correct resistance is as follows:
- about 1.1 - 1.5 kohms (wide open throttle position)
- about 2.6 - 3.0 kohms (idling speed)
If the resistance readings are not OK, change the position sensor.

3 With the ignition switch in the Drive position, take a voltage reading across pin 1 of the position sensor connector and ground.
A reading of 5 V should be obtained.

4 With the ignition switched off, check that pin 2 of the position sensor connector is connected to a good ground.
If it is not, check the lead between pin 2 and ground.

5 Plug in the Breakout Box (LH control module not connected). Check the lead between pin 1 of the position sensor connector and pin 10 of the LH control module.
If the lead is OK, go to point 7.

6 Check the lead between pin 3 of the position sensor connector and pin 2 of the control module.

7 Try fitting a new control module, see page 61.

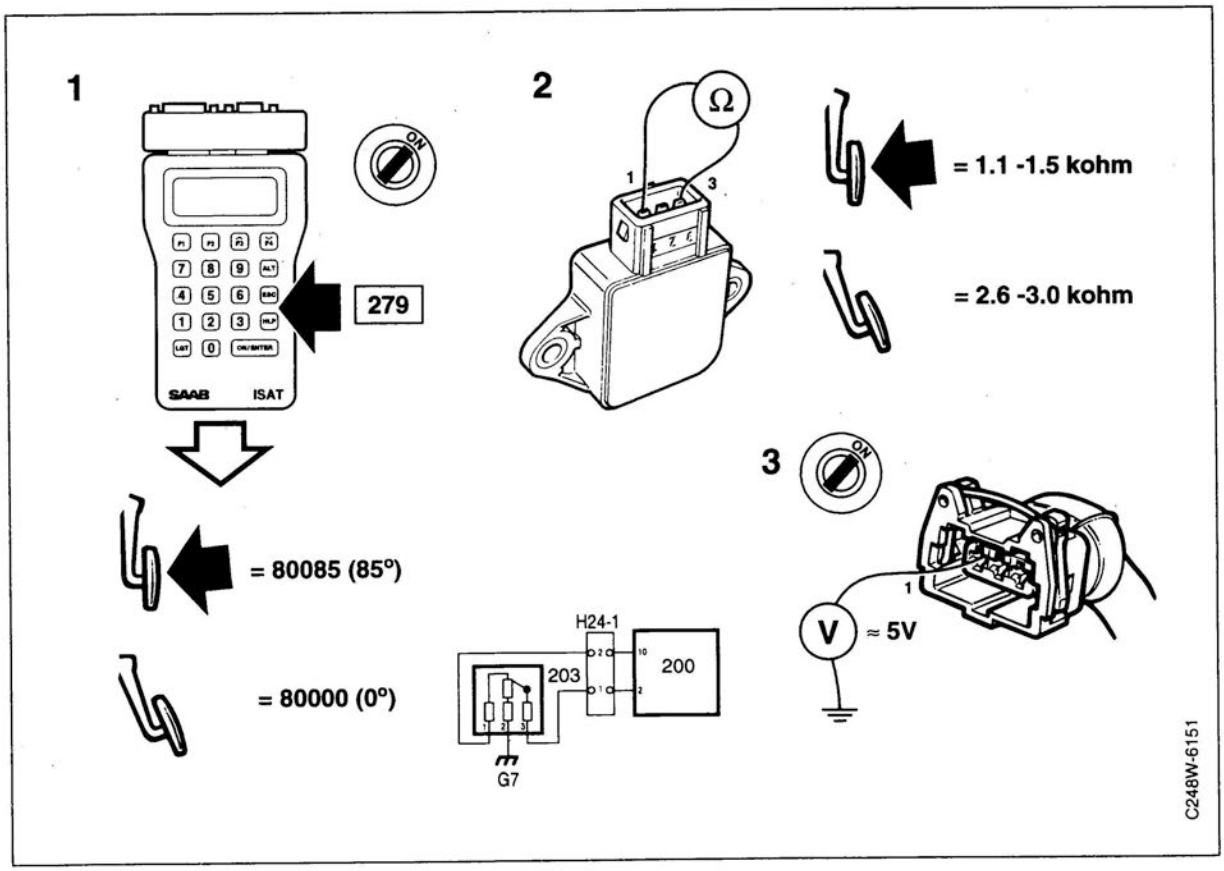
1
ON
279
SAAB ISAT
= 80085 (85°)
= 80000 (0°)
2
Ω
1
3
= 1.1 -1.5 kohm
= 2.6 -3.0 kohm
3
ON
1
V
≈ 5V
H24-1
203
200
G7
C248W-6151

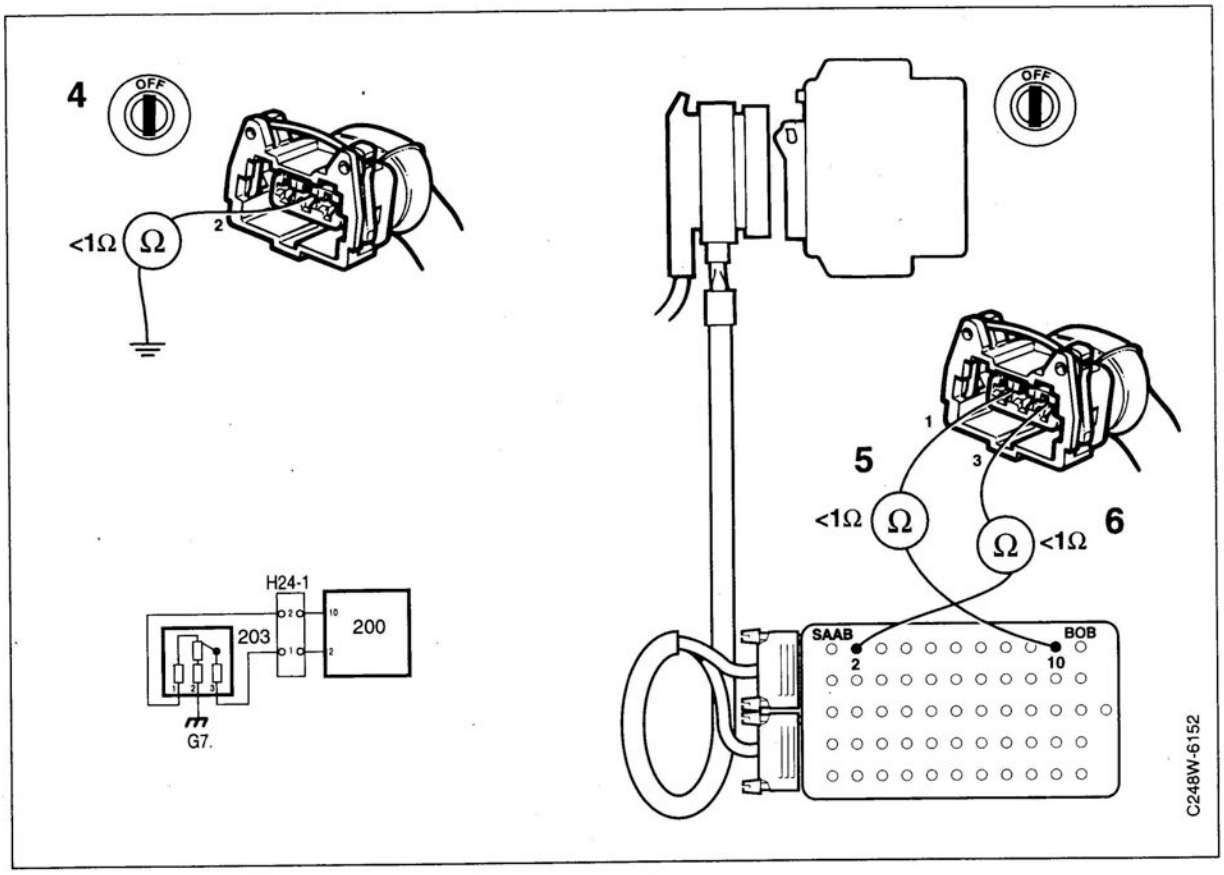
4
OFF
<1Ω
Ω
2
H24-1
203
200
G7.
OFF
1
3
5
<1Ω
Ω
Ω
<1Ω
6
SAAB
BOB
2
10
C248W-6152

ISAT SCAN TOOL	Cause of fault
45771/25771 (closed throttle position, indicated while car is being driven) 45772/25772 (full load)	Signal from throttle position switch absent or short-circuited to ground or battery.
Lamp-flash code	**Condition**
12212 12213 12251 (level of signal from position sensor too high/low).	Position switch indicates closed throttle position while car being driven. Position switch indicates closed throttle position and full load simultaneously at idling speed. Engine temperature above 80°C.
LH	**Fault symptom**
E002 E003 E102 E103	CHECK ENGINE lamp (MIL) on. Idle speed control not in proper working order. Full-load enrichment at full load absent or constant.
Test data	
Pin 2: Battery voltage Pin 3: Battery voltage if open circuit	

Diagnostic procedure LH 2.4 and 2.4.1

A condition for carrying out the work described in the following is for the throttle position switch to be correctly adjusted. If it is not, see "Checking and adjusting the throttle position switch" on page 159.

1 With the ignition switch in the Drive position, select command code 201 on the ISAT scan tool. The following throttle positions should be shown on the display:
- 8B101 = idling speed
- 8B001 = accelerator depressed halfway to floor
- 8B301 = wide open throttle

Alternatively, component testing can be carried out with the self-diagnostics function or the current status can be read off on the LH system tester's display.

2 Unplug the position switch connector. Check that connection exists between the following position switch pins:
- pins 18 and 2 (closed throttle position)
- pins 18 and 3 (wide open throttle position)

If there is no connection, change the position switch.

3 Check that pin 2 of the position switch connector is connected to a good ground.

4 Connect the Breakout Box (LH control module not connected). Check the lead between pin 2 of the control module and pin 1 of the position switch connector and, where applicable, also the lead to the respective ignition system.
Also check the lead between pin 3 of the control module and pin 3 of the position switch connector and, where applicable, also the lead to the DI system or possibly the A/C relay.

5 Try fitting a new control module, see page 61.

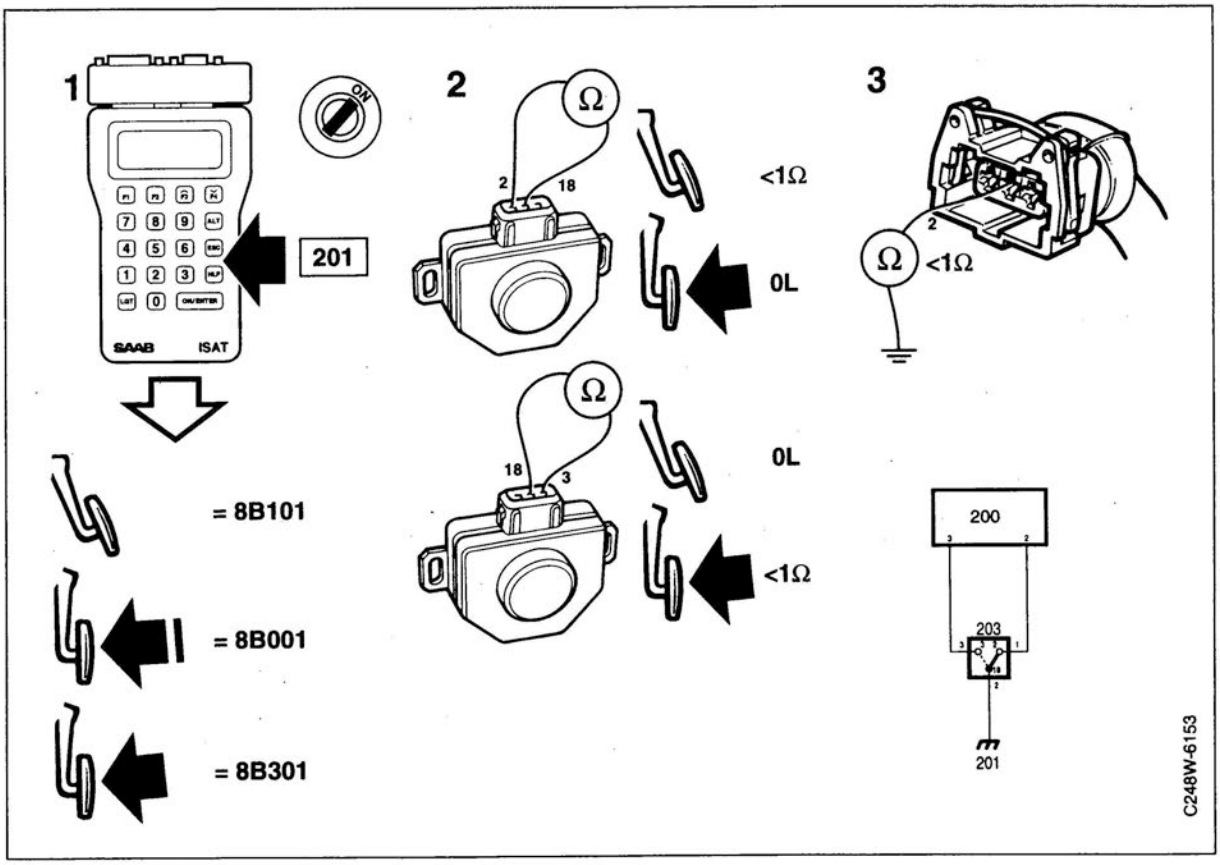
1
ON
SAAB
ISAT
201
= 8B101
= 8B001
= 8B301
2
Ω
2
18
<1Ω
0L
Ω
18
3
0L
<1Ω
3
Ω
2
<1Ω
200
203
201
C248W-6153

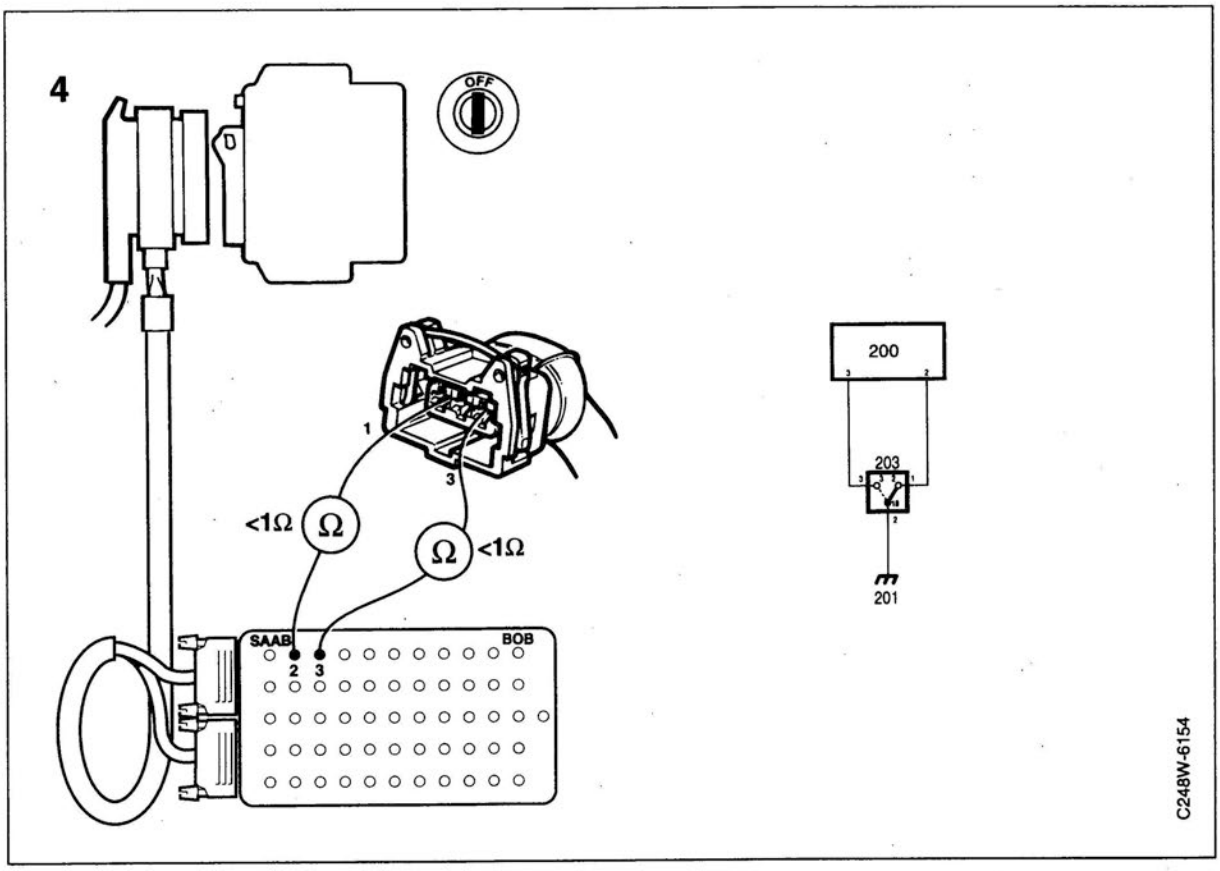
4
OFF
1
3
<1Ω
Ω
Ω
<1Ω
SAAB
BOB
2
3
200
203
201
C248W-6154

ISAT SCAN TOOL 45771/25771 45772/25772	**Cause of fault** Throttle position information incorrect.
Lamp-flash code 12212 12213	**Condition**
LH system test	**Fault symptom** CHECK ENGINE lamp (MIL) on. Idle speed control not in proper working order. Full-load enrichment at full load absent or constant.
Test data Pin 3: 0.5 V (idling speed) 11 V (wide open throttle)	

Cars with ETS

1 Check the diagnostic trouble codes, if any, in the ETS and DI systems.

2 Plug in the Breakout Box (LH control module not connected). With the ignition switch in the Drive position, take a voltage reading across pin 3 of the LH control module and ground.
The following readings should be obtained:
- about 0.5 V (idling speed)
- about 11 V (wide open throttle)

3 If these readings are not obtained, unplug the connectors from the ETS and DI/APC connectors.
LH 2.4.2. Check the lead between pin 3 of the LH control module and pin 26 of the ETS control module connector and also between pin 26 and pin 31 of the DI/APC control module connector.
LH 2.4 Check the lead between pin 3 of the LH control module and pin 8 of the DI/APC control module connector.

4 Continue fault diagnosis of the ETS system, see Service Manual 2:5 "Traction Control System".

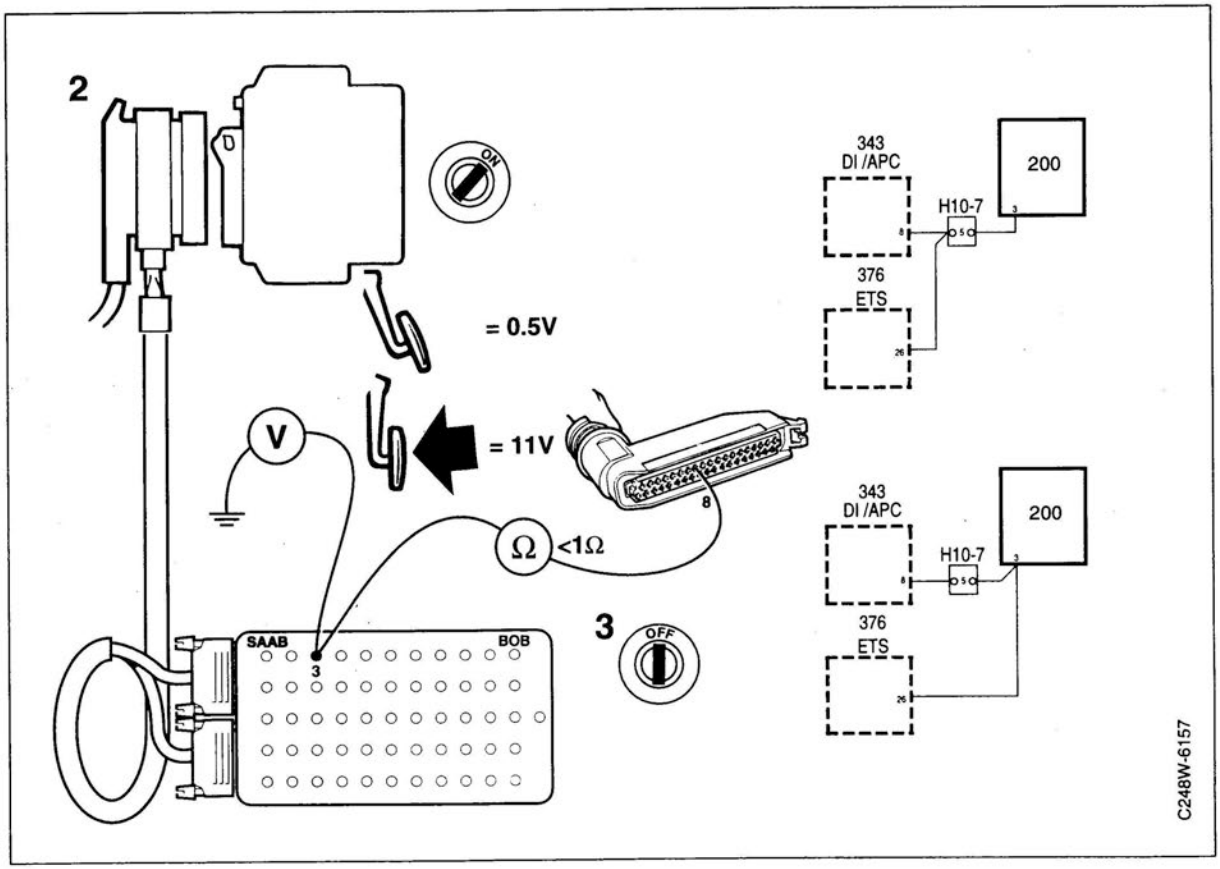
2
ON
= 0.5V
= 11V
V
8
Ω <1Ω
3
OFF
SAAB
BOB
3
343
DI /APC
200
H10-7
376
ETS
C248W-6157

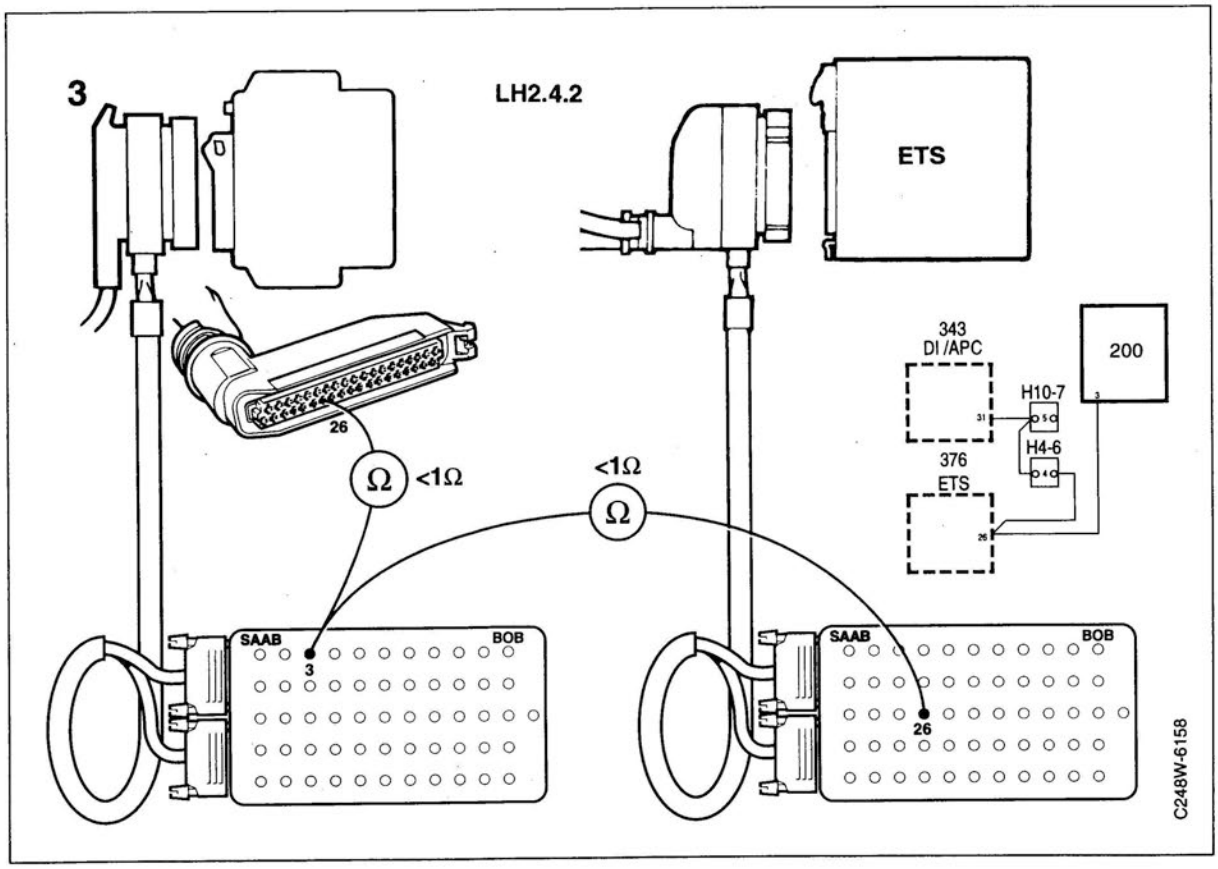
3
LH2.4.2
ETS
26
Ω <1Ω
<1Ω
Ω
343
DI /APC
200
H10-7
H4-6
376
ETS
SAAB
BOB
3
26
C248W-6158

ISAT SCAN TOOL	**Cause of fault** Signal from throttle position switch absent or short-circuited to ground or battery.
Lamp-flash code	**Condition** Position switch indicates closed throttle position while car being driven. Position switch indicates closed throttle position and full load simultaneously at idling speed. Engine temperature above 80°C.
LH system test E002 E103	**Fault symptom** CHECK ENGINE lamp (MIL) on. Idle speed control not in proper working order. Full-load enrichment at full load absent or constant.
Test data Pin 3: 5 V if open circuit Pin 12: 5 V if open circuit	

Diagnostic procedure, LH 2.2

A condition for carrying out the work described in the following is for the throttle position switch to be correctly adjusted. If it is not, see "Checking and adjusting the throttle position switch" on page 159.

1 Read off the current status on the LH system tester's display.

2 Unplug the position switch connector. Check that connection exists between the following position switch pins:
- pins 18 and 2 (closed throttle position)
- pins 18 and 3 (wide open throttle position)

If there is no connection, change the position switch.

3 Check that pin 2 of the position switch connector is connected to a good ground.

4 Plug in the Breakout Box (LH control module not connected). Check the lead between pin 3 of the control module and pin 1 of the position switch connector and, where applicable, also the lead to the respective ignition system.
Also check the lead between pin 12 of the control module and pin 3 of the position switch connector and, where applicable, also the lead to the diagnostics terminal block (204) and possibly the A/C relay.

5 Try fitting a new control module, see page 61.

jxh

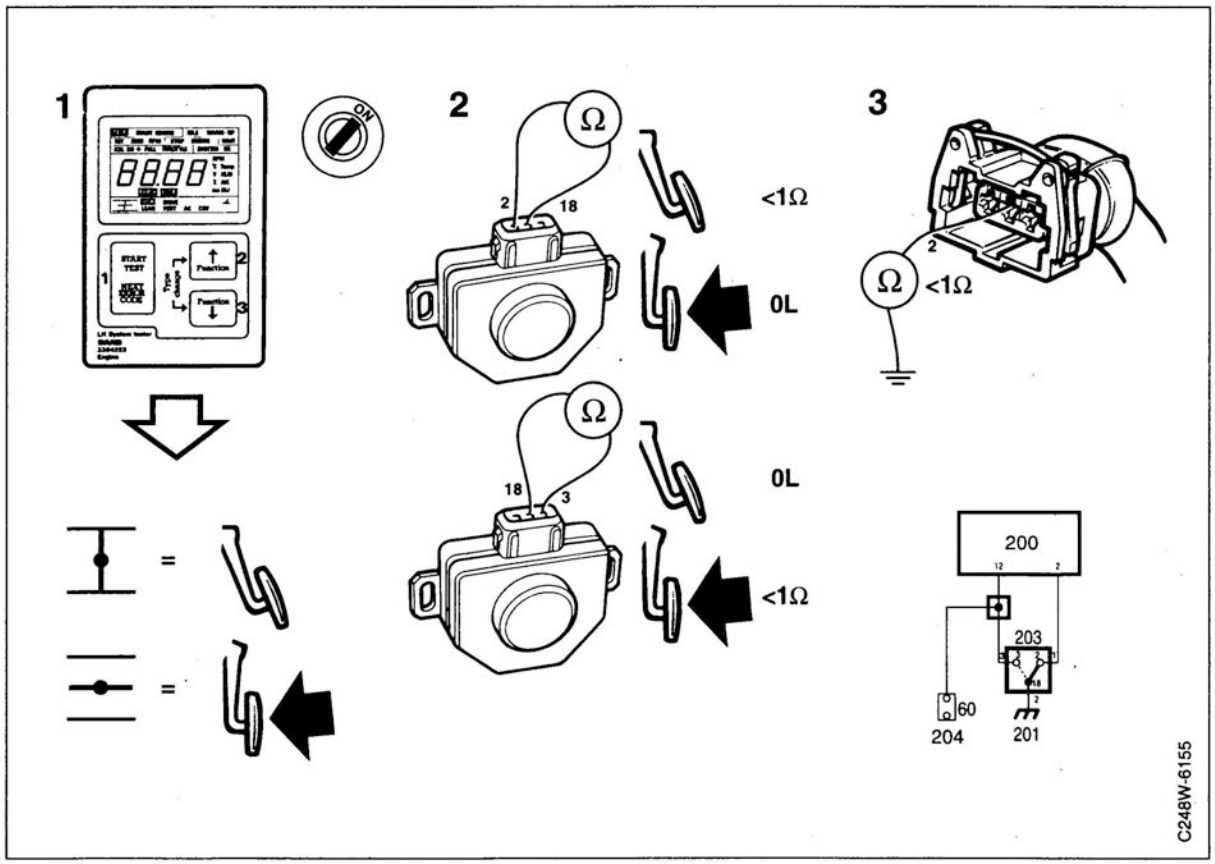
1
ON
START TEST
NEXT CODE
CODE
Function
Function
2
Ω
2
18
<1Ω
0L
Ω
18
3
0L
<1Ω
3
Ω
2
<1Ω
=
=
200
12
2
203
60
204
201
C248W-6155

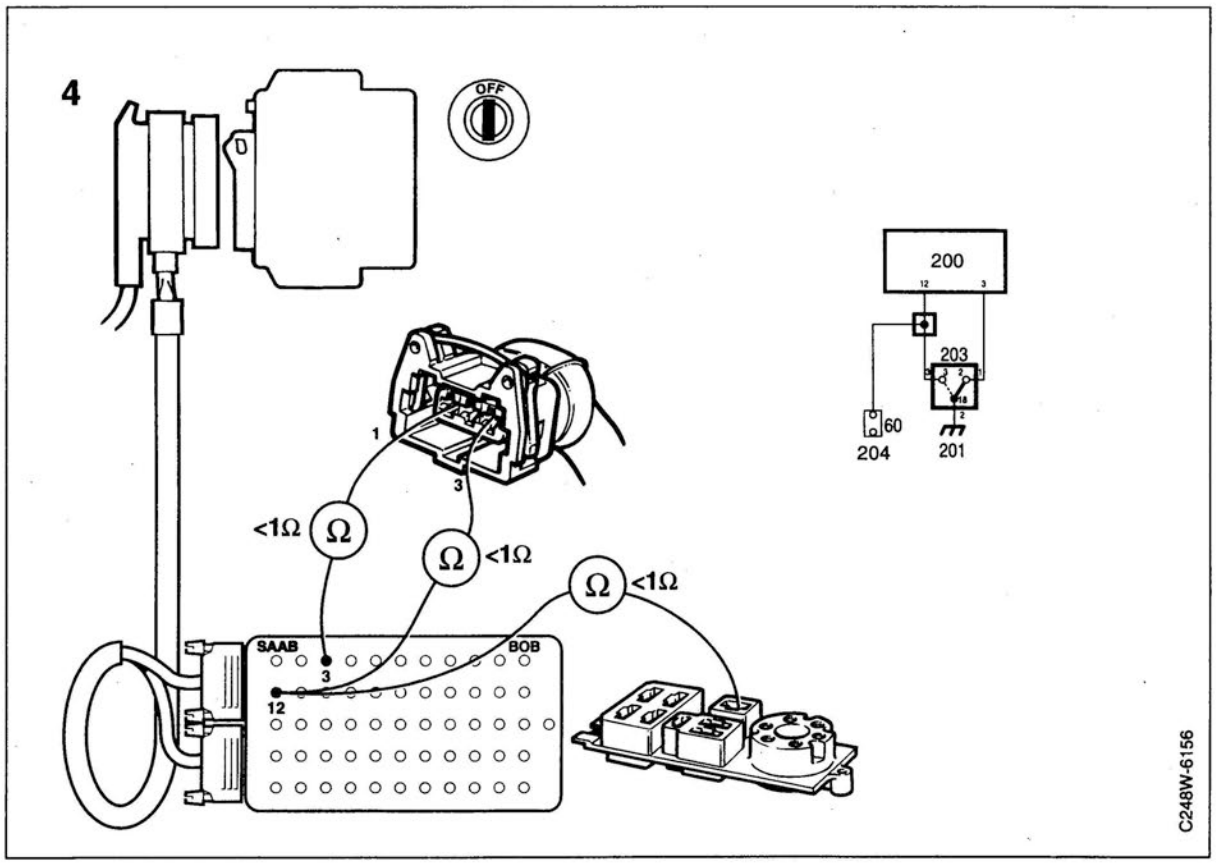
4
OFF
200
12
3
203
60
204
201
1
3
<1Ω
Ω
Ω
<1Ω
Ω
<1Ω
SAAB
BOB
3
12
C248W-6156

ISAT SCAN TOOL 46221/26221 46271/26271	**Cause of fault** Temperature sensor (NTC) faulty. Signal absent or short circuit.
Lamp-flash code 12214	**Condition** Engine temperature indicates a temperature lower than -90°C or higher than +160°C.
LH system test LH 2.4, 2.4.1 and 2.4.2 E013 E113 LH 2.2 E002 E102	**Fault symptom** CHECK ENGINE lamp (MIL) on. Poor drivability. High fuel consumption. Reluctant to start.
Test data LH 2.4, 2.4.1, 2.4.2. Pin 13: -20°C = 4 V +80°C = 0.5 V. LH 2.2 Pin 2: -20°C = 4 V +80°C = 0.5 V	

Diagnostic procedure

1 Select command code 250 on the ISAT scan tool.
The current engine coolant temperature should now be shown on the display, e.g. 80 + 080 if the temperature is +80°C.
Alternatively, the LH system tester can be used.

2 With the temperature sensor connector unplugged, take a reading of the resistance of the temperature sensor, see table.
-Cars without ETS: across pins 1 and 2
-Cars with ETS: across pin 1 and ground
if the resistance reading obtained is not OK, change the temperature sensor.

3 If the resistance reading is OK, plug in the temperature sensor connector and unplug the LH control module connector. Connect the Breakout Box.
Take a resistance reading across pin 13 (LH 2.2 pin 2) and a good ground.
The resistance reading obtained should be as shown in the table (a few ohms higher is acceptable).
If the resistance reading obtained is OK, go to point 4.
If it is not, check the lead between pin 13 of the connector (LH 2.2 pin 2) and pin 1 of the temperature sensor connector.

4 Check the lead between pin 2 of the temperature sensor connector and the grounding point on the engine (not ETS).
If the lead is OK, go to point 5.

5 Try fitting a new control module, see page 61.

Table

°C	°F	Ohms
-20	-4	15700 ±10 %
-10	14	9500 ±10 %
0	32	5800 ±10 %
10	50	3800 ±10 %
15	58	3000 ±8 %
20	68	2600 ±7 %
25	76	2000 ±6 %
30	86	1700 ±5 %
80	176	320 ±5 %

-20°C = 4 V, +80°C = 0.5 V

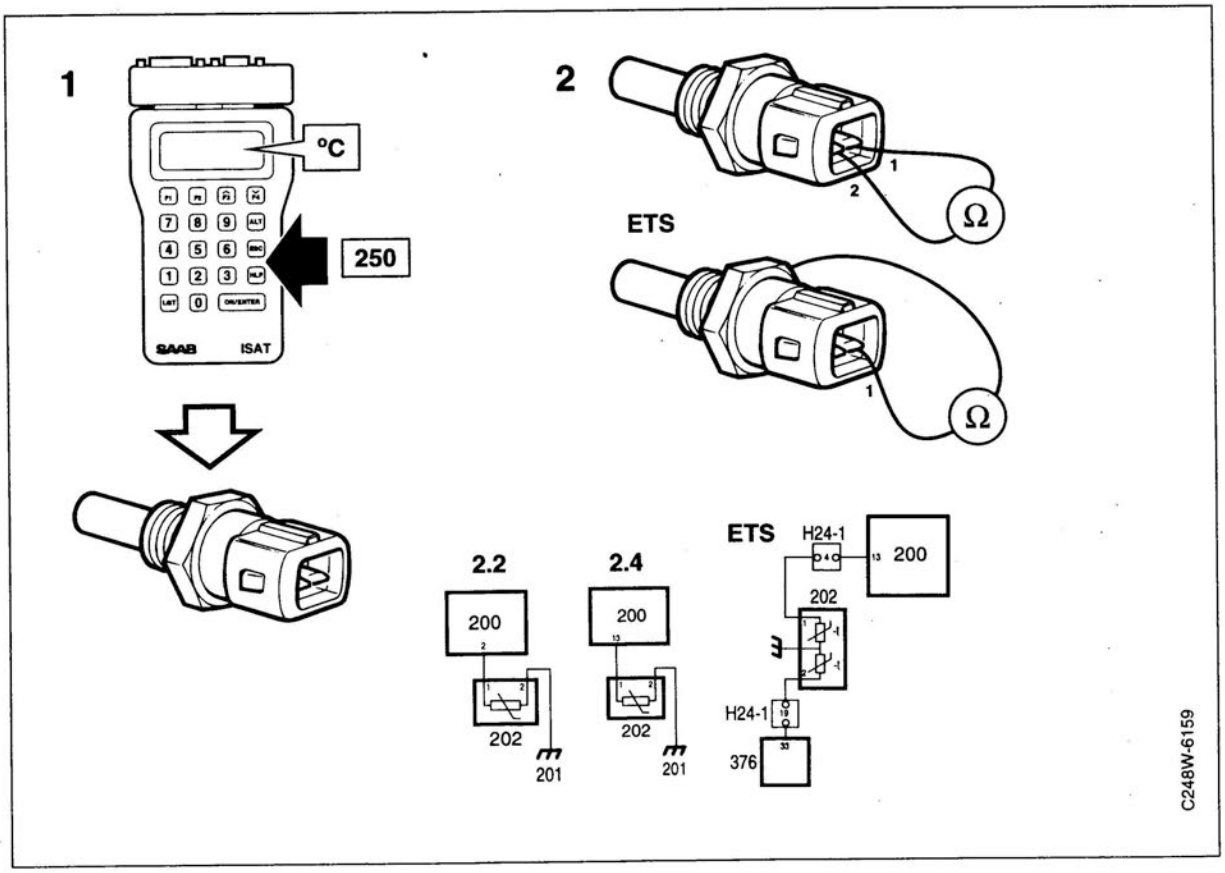
1
°C
250
SAAB
ISAT
2
ETS
Ω
2.2
2.4
200
202
201
ETS
H24-1
376
C248W-6159

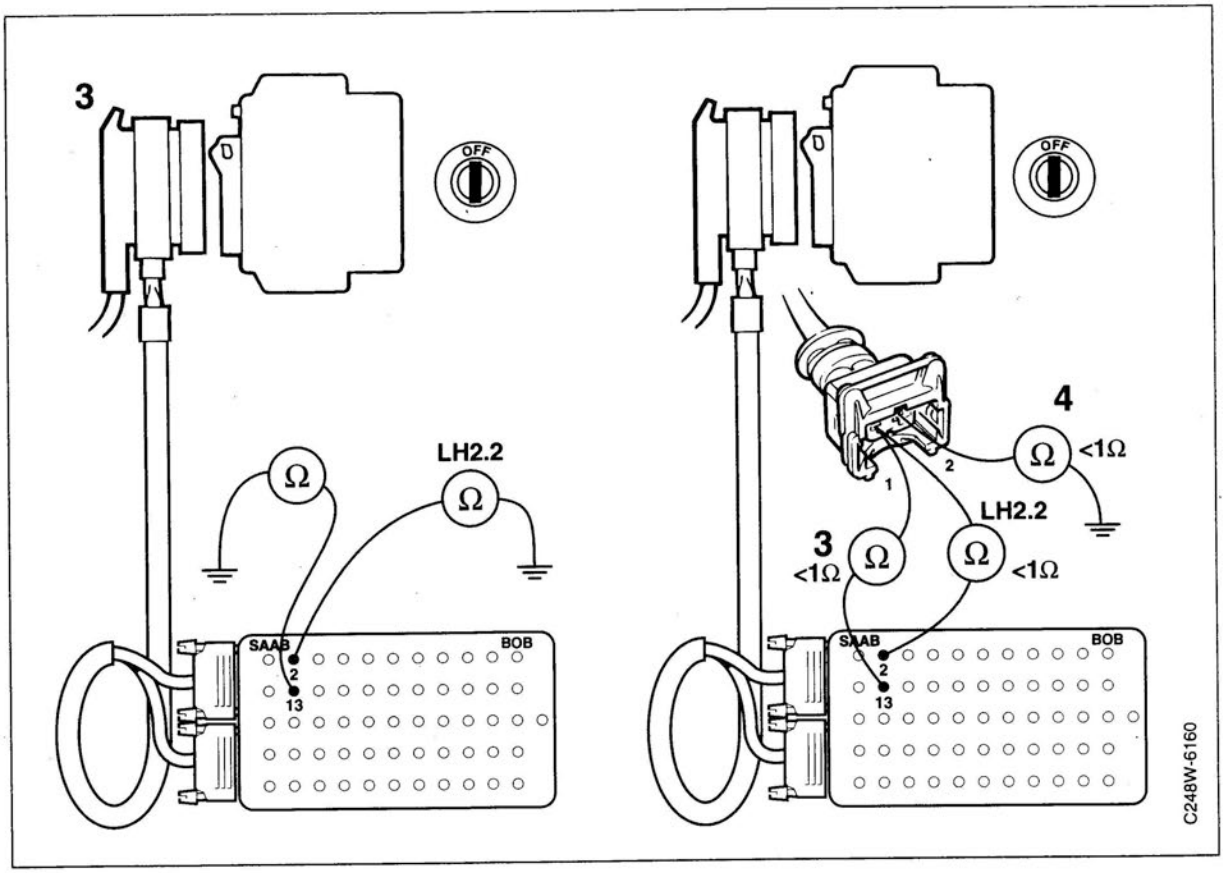
3
OFF
Ω
LH2.2
SAAB
BOB
2
13
4
<1Ω
1
2
LH2.2
3
<1Ω
C248W-6160

ISAT SCAN TOOL 46391/26391	Cause of fault EGR temperature sensor, signal incorrect or absent.
Lamp-flash code 12245	**Condition** Engine warmed up, engine speed 1,750-1,900 rpm, load signal 98 - 3.58 ms (normal road load). NTC resistor value lower than 4.4 V.
LH system test	**Fault symptom** CHECK ENGINE lamp (MIL) on.
Test data Pin 19: Activated = battery voltage Not activated = lower than battery voltage. Pin 23: EGR closed = 4.5 V EGR open = less than 4.5 V.	

Diagnostic procedure

1 With the ignition switch in the Drive position, select command code 555 on the ISAT scan tool. Alternatively, component testing can be carried out with the self-diagnostics function.
Listen for the sound of the modulating valve working.
If it is working, continue with point 6.

2 If the modulating valve is not working, unplug its connector and take a resistance reading across the pins.
The reading obtained should be about 30 ohms.
If it is not, change the modulating valve.

3 With the ignition switch int he drive position, check that battery voltage is present on pin 2 of the modulating valve.
If it is not, check the lead between pin 2 of the modulating valve connector and pin 87 of the main relay.

4 Plug in the Breakout Box (LH control module not connected). Check the lead between pin 1 of the modulating valve connector and pin 19 of the control module connector.

5 If the leads are OK, try fitting a new control module. See page 61.
NOTE: Diagnostic procedure is continued on the next page.

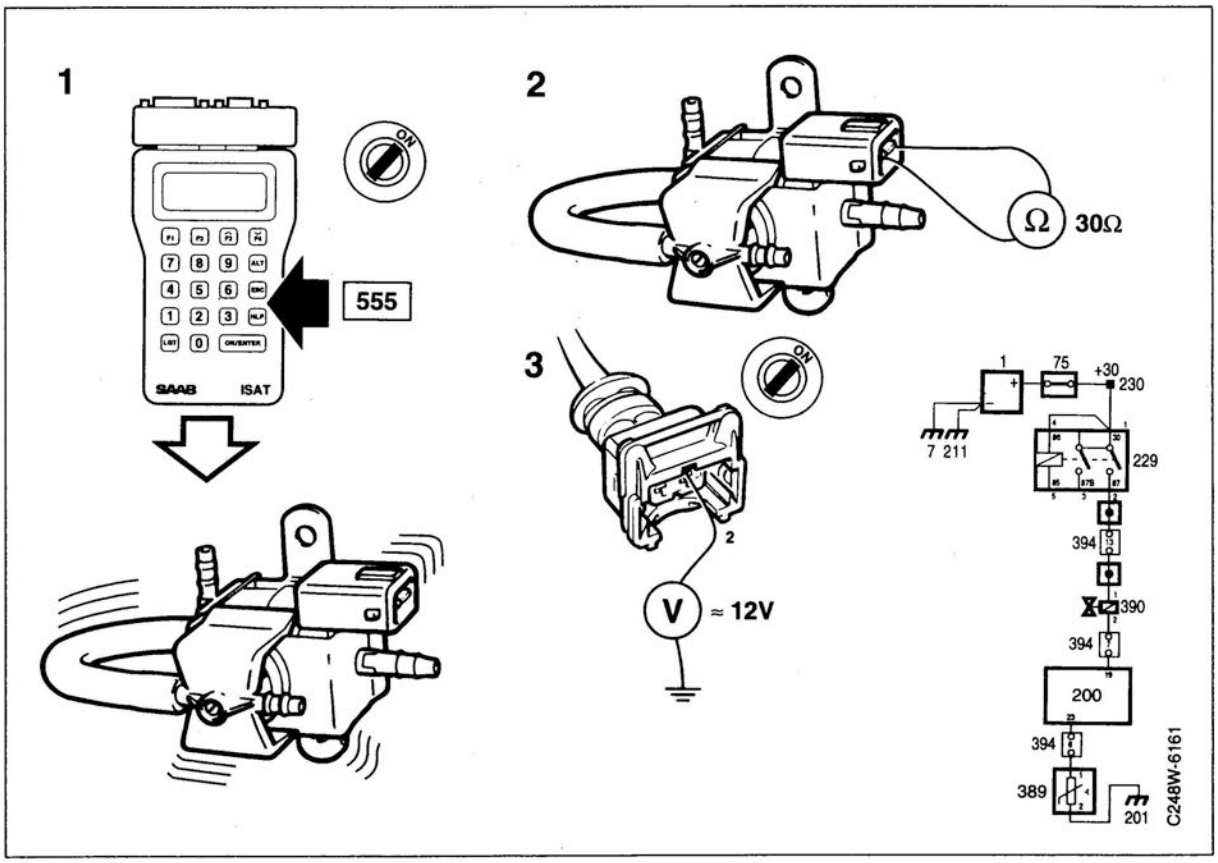
1
ON
555
SAAB
ISAT
2
Ω
30Ω
3
ON
2
V
≈ 12V
1
75
+30
230
7 211
229
394
390
394
200
394
389
201
C248W-6161

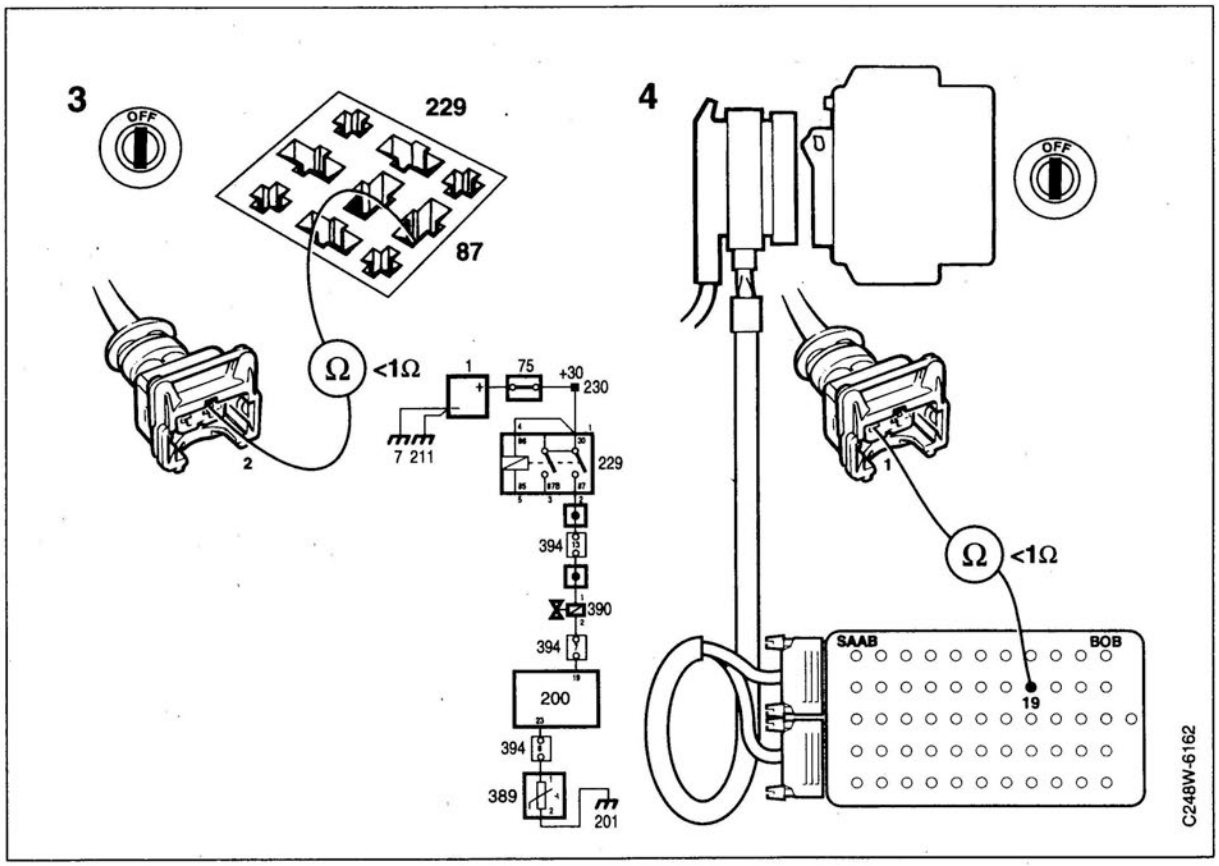
3
OFF
229
87
Ω
<1Ω
2
1
75
+30
230
7 211
229
394
390
394
200
394
389
201
4
OFF
1
Ω
<1Ω
SAAB
BOB
19
C248W-6162

ISAT SCAN TOOL 46391/26391	Cause of fault EGR temperature sensor, signal incorrect or absent.
Lamp-flash code 12245	**Condition** Engine warmed up, engine speed 1,750-1,900 rpm, load signal 98 - 3.58 ms (normal road load). NTC resistor value lower than 4.4 V.
LH system test	**Fault symptom** CHECK ENGINE lamp (MIL) on.
Test data Pin 19: Activated = battery voltage Not activated = lower than battery voltage. Pin 23: EGR closed = 4.5 V EGR open = less than 4.5 V.	

Diagnostic procedure (contd.)

6 With the modulating valve and control module connected, unplug the connector for the temperature sensor in the EGR system.
Run the engine at idling speed and check that the resistance of the temperature sensor is several megohms.
Build up a vacuum in the valve through the hose marked red that is connected to the EGR valve. At the same time, check that the resistance of the temperature sensor drops to kohms.
If it does not, change the EGR valve (the temperature sensor is incorporated in the EGR valve).

7 Plug in the Breakout Box (LH control module not connected). Check the lead between pin 1 of the temperature sensor connector and pin 23 of the LH control module connector.
Check the lead between pin 2 of the temperature sensor connector and ground.

8 If the fault persists, continue by checking the vacuum hoses as follows:
   a. With the engine running, disconnect the hose marked red from the modulating valve to the intake manifold.
   b. Build up a vacuum in the hose.
   If engine speed now drops, the EGR valve is OK.
   If it does not, check the hose, connections and vacuum tank.
   c. Also check that a vacuum is present in the hose marked white connected to the modulating valve.
   If no vacuum is present, check the hose, connections and vacuum tank.

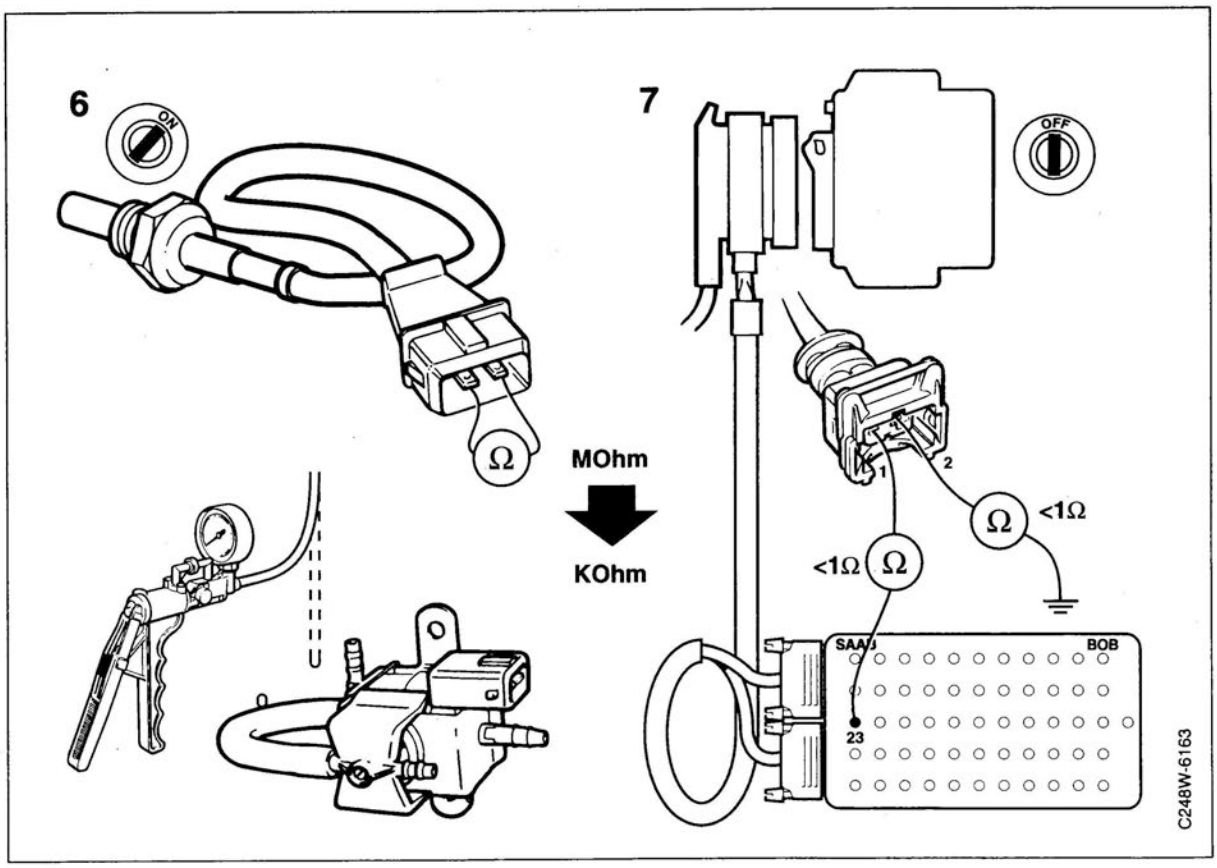
6
ON
Ω
MOhm
KOhm
7
OFF
1
2
Ω
<1Ω
<1Ω
Ω
SAAB
BOB
23
C248W-6163

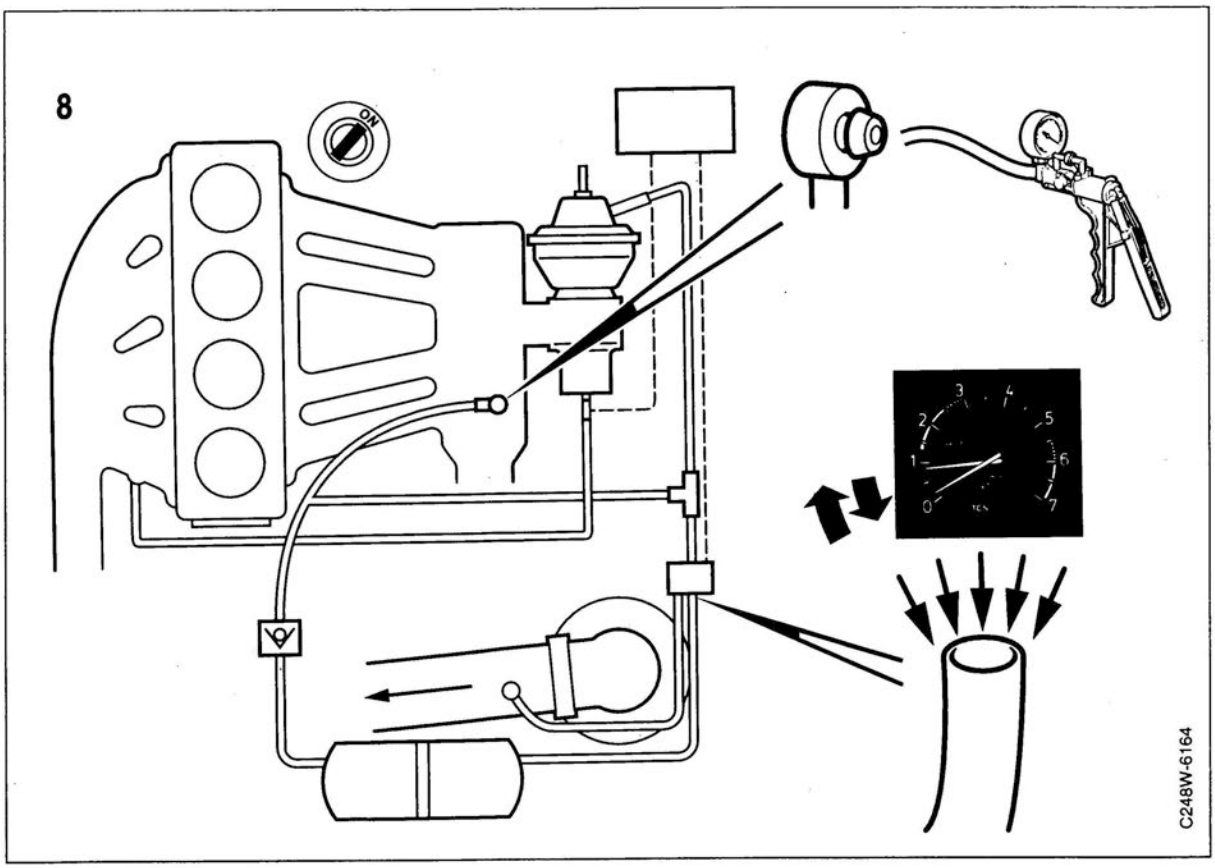
8
ON
C248W-6164

ISAT SCAN TOOL 58121/38121	Cause of fault Mass air flow sensor's burn-off function absent. Mass air flow sensor's burn-off function constantly activated (short circuit to ground).
Lamp-flash code 12242	**Condition** Less than 2 V when burn-off activated (1 sec.).
LH system test E008 E108	**Fault symptom** CHECK ENGINE lamp (MIL) on. Reluctant to start, poor drivability. High fuel consumption.
Test data Pin 8: 4 V during the burn-off period, 1 s, 20 s (4 s for LH 2.2) after engine has been switched off. 0 V in other cases.	

Diagnostic procedure

If diagnostic trouble code 45691/25691 is generated simultaneously, it is advisable to deal with that trouble code first.

1 Remove the mass air flow sensor from the air cleaner.

2 Start the engine, warm it up to min. 65°C (150°F), and run it at idling speed. Rev the engine up to 2,500 rpm, release the accelerator and run the engine at idling speed again.

3 Switch off the ignition and observe the filament (hot wire). It should glow brightly for about 1 sec. after about 20 s (4 s for LH 2.2). If it does not, go to point 4.

4 Unplug the connector from the mass air flow sensor. Start the engine and rev it up to 2,500 rpm. Release the accelerator and run the engine at idling speed. Switch off the ignition. Check that 4 V is present across pin 4 of the mass air flow sensor connector (pin 1 on mass air flow sensors of aluminium) and a good ground.
If it is, see point 5.
If it is not, see point 7.
NOTE: Diagnostic procedure is continued on the next page.

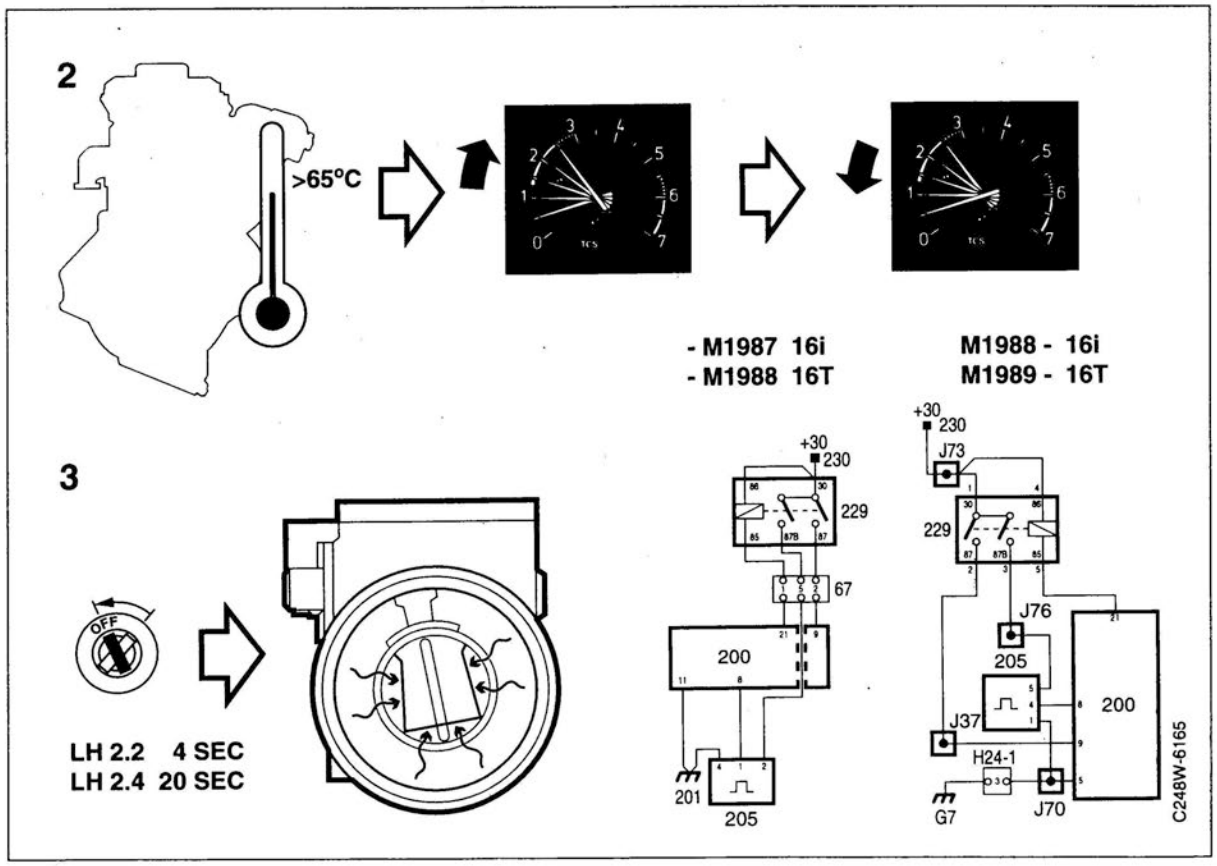
2
>65°C
- M1987 16i
- M1988 16T
M1988 - 16i
M1989 - 16T
3
OFF
LH 2.2 4 SEC
LH 2.4 20 SEC
+30
230
229
67
200
201
205
J73
J76
J37
H24-1
J70
G7
C248W-6165

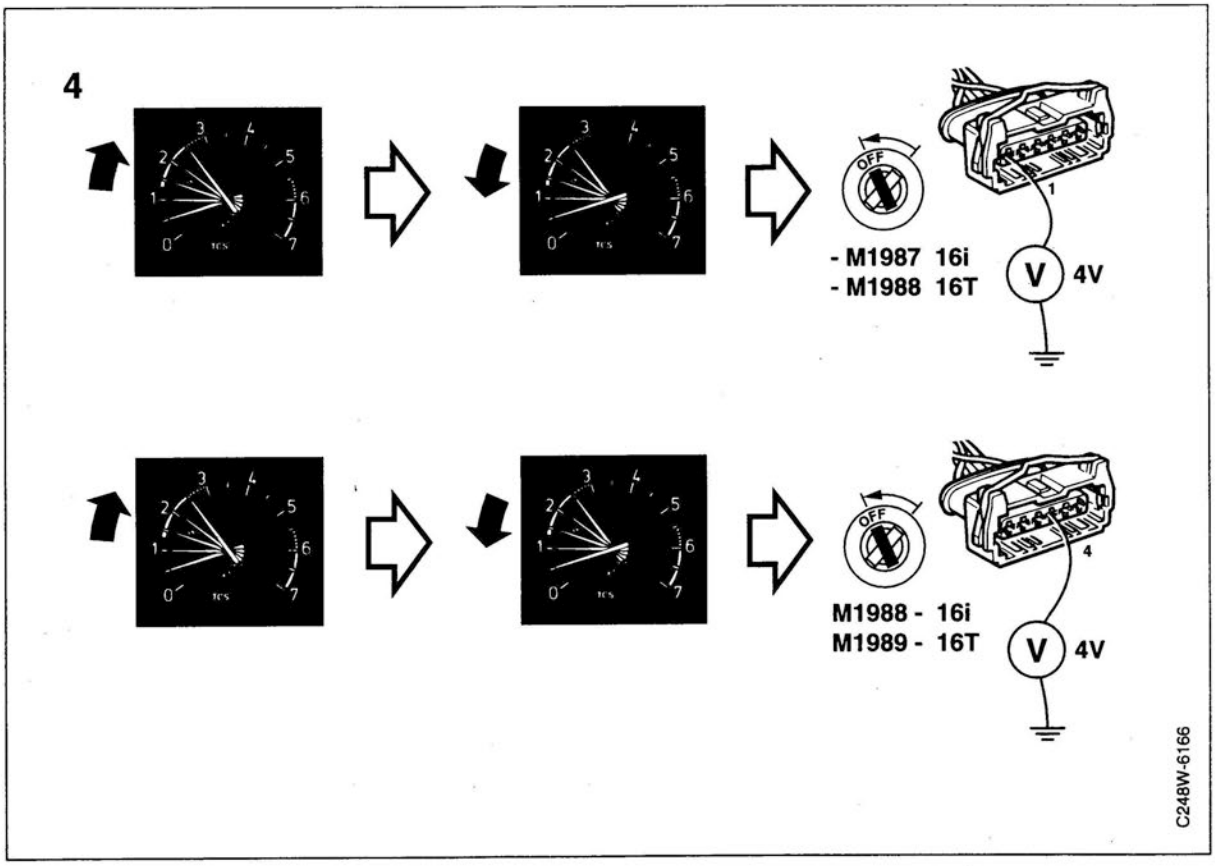
4
OFF
- M1987 16i
- M1988 16T
V
4V
M1988 - 16i
M1989 - 16T
C248W-6166

ISAT SCAN TOOL 58121/38121	Cause of fault Mass air flow sensor's burn-off function absent. Mass air flow sensor's burn-off function constantly activated (short circuit to ground).
Lamp-flash code 12242	**Condition** Less than 2 V when burn-off activated (1 sec.).
LH system test E008 E108	**Fault symptom** CHECK ENGINE lamp (MIL) on. Reluctant to start, poor drivability. High fuel consumption.
Test data Pin 8: 4 V during the burn-off period, 1 s, 20 s (4 s for LH 2.2) after engine has been switched off. 0 V in other cases.	

Diagnostic procedure (contd.)

5 Check the lead between pin 5 of the mass air flow sensor connector (pin 2 for a mass air flow sensor of aluminium) and pin 87B of the main relay. Also check the operation of the relay and the ground lead from pin 1 (or pin 4) to the engine grounding point.

6 If voltage is present, change the mass air flow sensor.

7 Plug the Breakout Box into the car's wiring harness (LH control module not connected). Check the mass air flow sensor's wiring between pin 4 (or pin 1) and pin 8 of the Breakout Box.

8 If the wiring is OK, change the control module. See page 61.

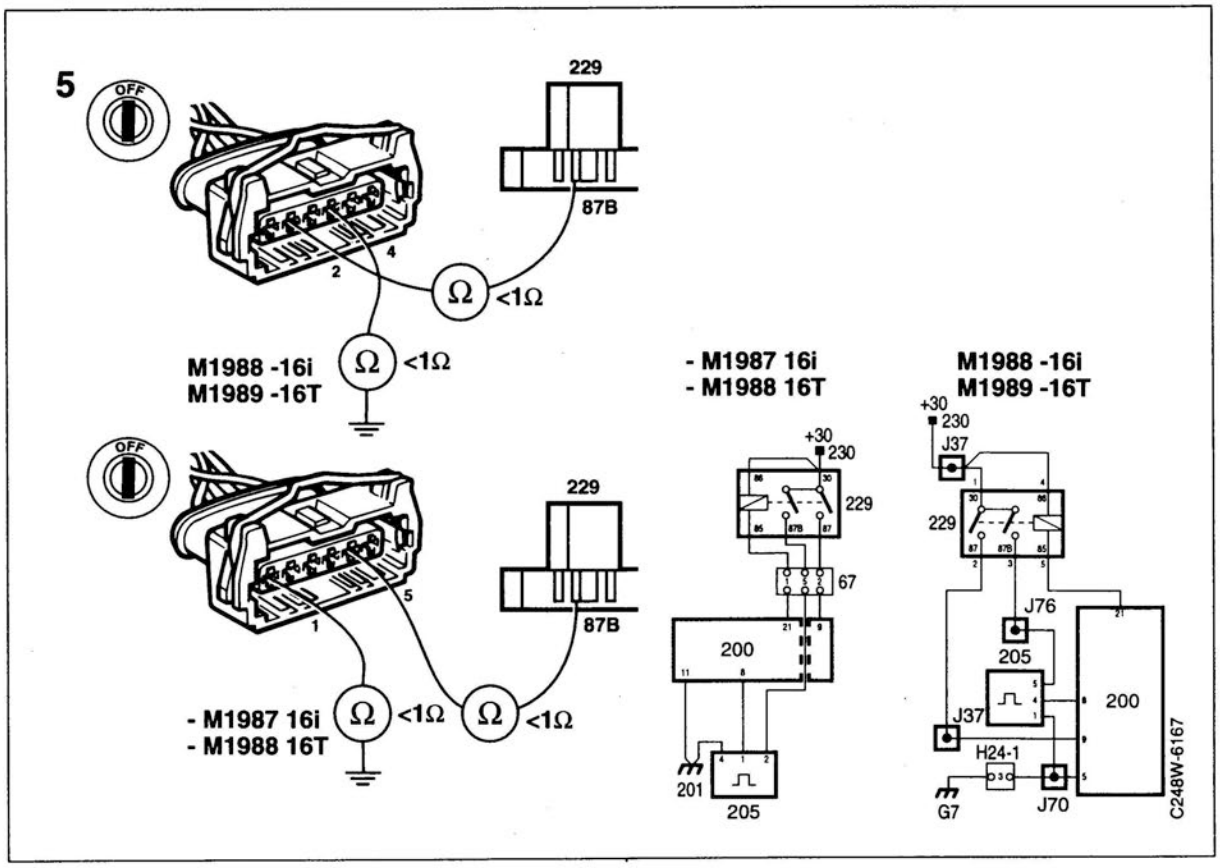
5
OFF
229
87B
2
4
Ω
<1Ω
M1988 -16i
M1989 -16T
- M1987 16i
- M1988 16T
+30
230
229
67
200
201
205
J37
J76
H24-1
G7
J70
C248W-6167

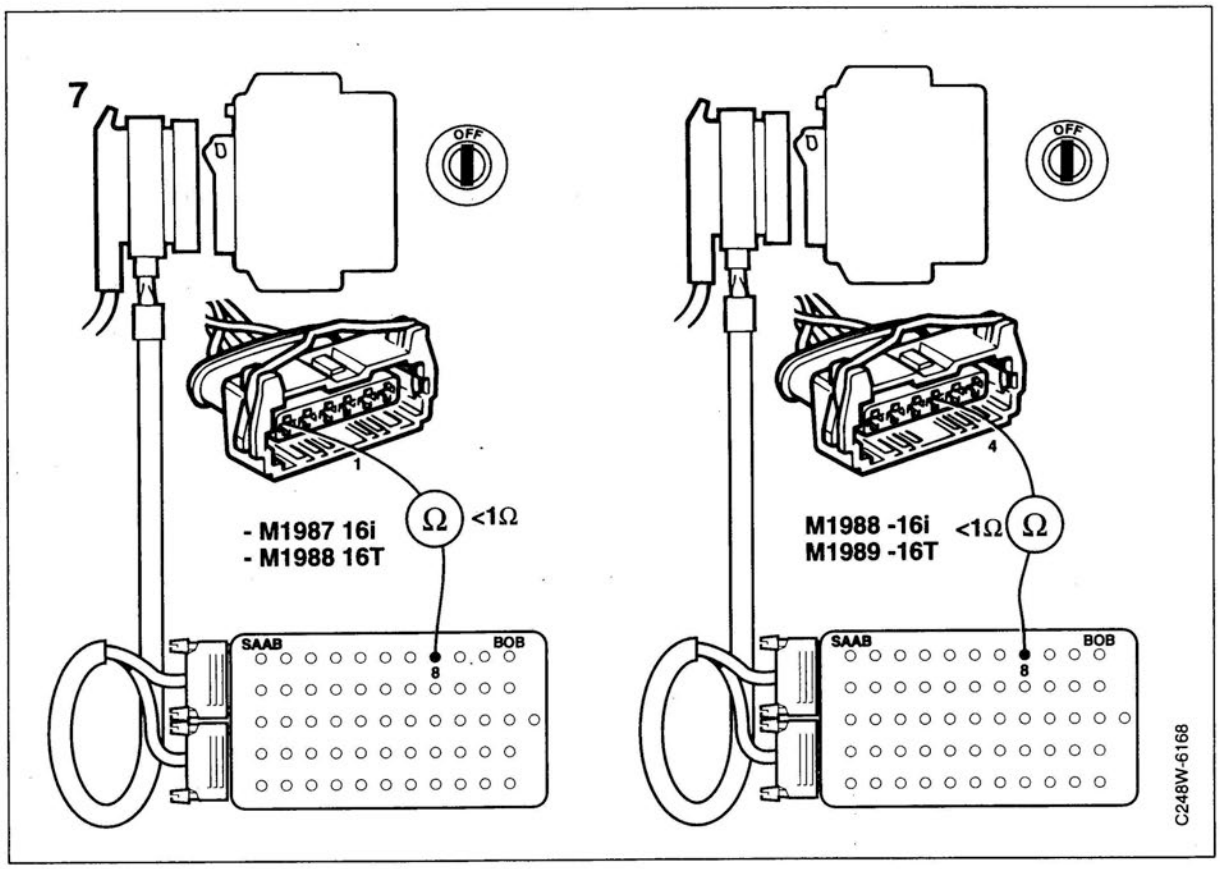
7
OFF
1
4
Ω
<1Ω
- M1987 16i
- M1988 16T
M1988 -16i
M1989 -16T
SAAB
BOB
8
C248W-6168

ISAT SCAN TOOL 58321/38321	**Cause of fault** Idle air control valve malfunctioning.
Lamp-flash code 12222	**Condition** No voltage alternating in connection with the output stage's internal monitoring, i.e. pulses to the idle air control valve. Probably caused by defective valve or wiring.
LH system test	**Fault symptom** Uneven idling, high/low engine speed, no compensation for change in engine load, engine stalls.
Test data LH 2.4.2. Pin 15: 7 - 11 V Pin 33: 5 - 11 V Hot engine, idling speed	

Diagnostic procedure, LH 2.4.2

For fault diagnosis, see also "Checking the idle air control valve" on page 175.

1 Of the LH tester has been used, go to point 2. With the ignition switch in the Drive position, select command code 553 on the ISAT scan tool or carry out component testing with the self-diagnostics function.
Check by listening for the sound of the idle air control valve working (1 Hz).

2 With the ignition switch in the Drive position, check that battery voltage is present across pin 2 of the IAC valve connector and a good ground. If it is not, check the lead between pin 2 of the IAC valve and pin 87 of the main relay for continuity/shorting and the operation of the relay.

3 Connect test LED 86 11 857. Ignition switch in the ON position. One lead to the battery positive terminal and one lead to pin 1 and pin 3 of the IAC valve connector. The LED should light up in both cases.
If it does not, go to point 5.
If it does, go to point 4.

4 With the ignition switch in the OFF position and the IAC valve connector unplugged, check the resistance of the valve's two motor windings across pins 1 and 2 and across pins 2 and 3. The resistance should be 10 - 15 ohms in each winding.
If it is not, change the IAC valve.

5 Plug the Breakout Box into the car's wiring harness (LH control module not connected). Check the lead between pin 33 of the LH control module and pin 1 of the IAC valve, as well as the lead between pin 15 of the control module and pin 3 of the IAC valve, for continuity/shorting.

6 Try fitting a new LH control module, see also page 61.

Important

Do not touch the slide with a hard object such as a screwdriver as this could scratch it and cause the valve to bind.

jxh

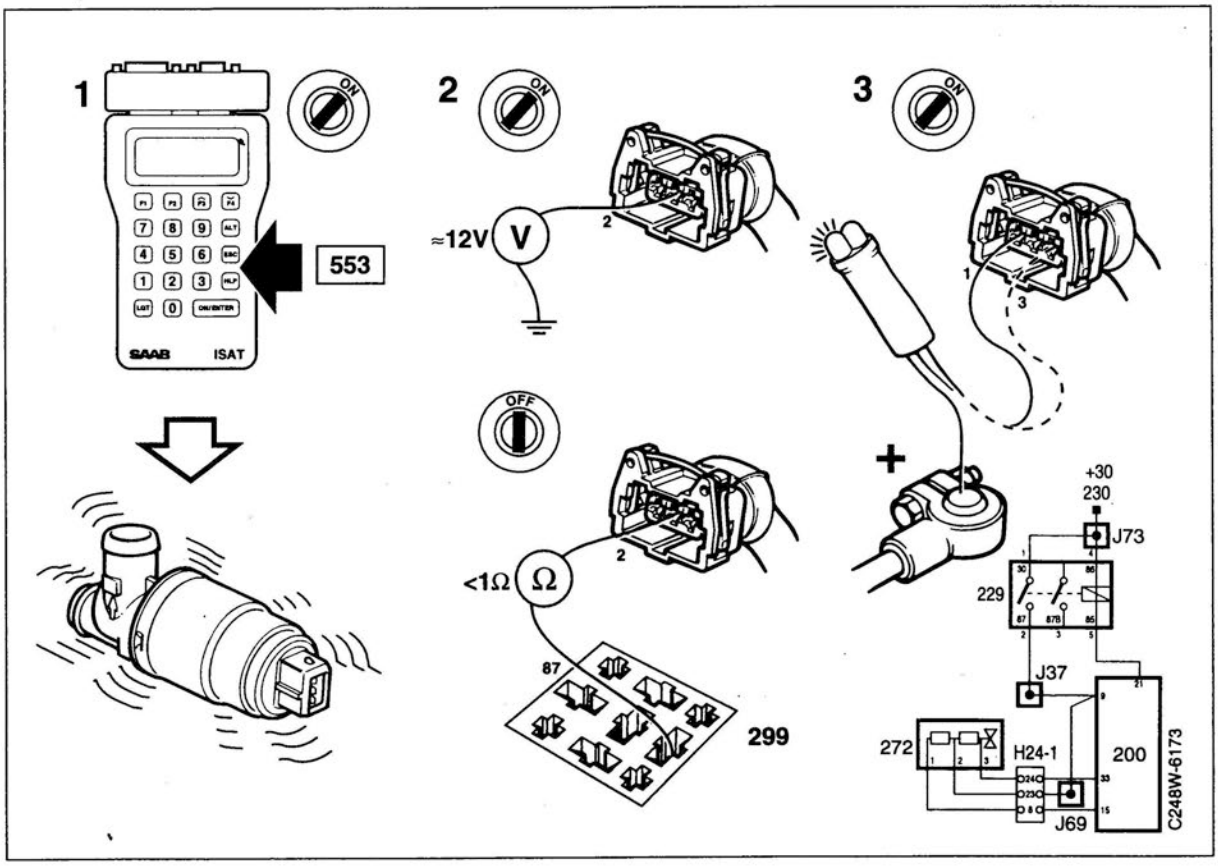
1
ON
553
SAAB
ISAT
2
ON
≈12V
V
2
OFF
<1Ω
Ω
2
87
299
3
ON
1
3
+
+30
230
J73
229
J37
272
H24-1
200
J69
C248W-6173

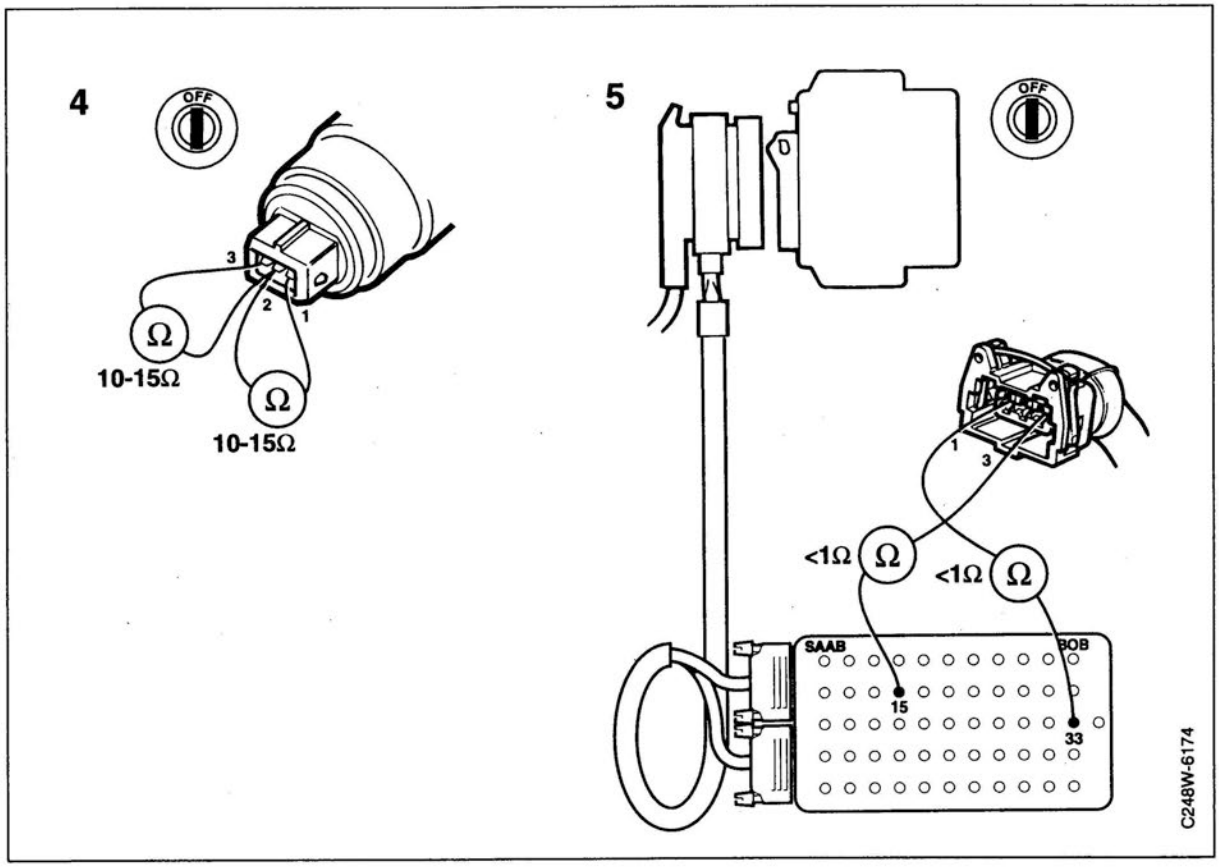
4
OFF
3
2
1
Ω
10-15Ω
Ω
10-15Ω
5
OFF
D
1
3
<1Ω
Ω
<1Ω
Ω
SAAB
BOB
15
33
C248W-6174

ISAT SCAN TOOL 58321/38321	**Cause of fault** Idle air control valve malfunctioning.
Lamp-flash code 12222	**Condition** No voltage alternating in connection with the output stage's internal monitoring, i.e. pulses to the idle air control valve. Probably caused by defective valve or wiring.
LH system test E033	**Fault symptom** Uneven idling, high/low engine speed, no compensation for change in engine load, engine stalls.
Test data LH 2.4, 2.4.1. Pin 33: 5 - 11 V Engine hot, idling speed	

Diagnostic procedure LH 2.4 and 2.4.1

For fault diagnosis, see also "Checking the idle air control valve" on page 175.

1 With the ignition switch in the Drive position, select command code 553 on the ISAT scan tool or carry out component testing with the self-diagnostics function.
Check by listening for the sound of the idle air control valve working (1 Hz).

2 Check the adjustment of the throttle position switch by selecting command code 201 on the ISAT scan tool.
With the accelerator in the idle (not depressed) position, the ISAT scan tool display should show 8B101.
When the accelerator is depressed, the code should change to 8B001 (when the idling speed switch opens).
Alternatively, component testing can be carried out by means of the self-diagnostics function or the LH tester.
If operation of the switch is not OK, see "Checking and adjustment of the throttle position switch" on page 159.

3 With the ignition switch in the Drive position, check that battery voltage is present across pin 2 of the IAC valve connector and a good ground.
If it is, go to point 4.
If it is not, check the lead between pin 2 of the IAC valve and pin 87 of the main relay for continuity/shorting and the operation of the relay.

4 Connect one lead of test LED 86 11 857 to the positive battery terminal and the other lead to pin 1 of the idle air control valve connector. The LED should light up.
If it does not, go to point 6.
If it does, go to point 5.

5 With the ignition switch in the OFF position and the idle air control valve connector unplugged, measure the resistance of the valve's motor winding by taking a reading across pins 1 and 2. The resistance reading obtained should be 2 - 12 ohms.
If it is not, change the IAC valve.

6 Plug the Breakout Box into the car's wiring harness (LH control module not connected). Check the lead between pin 33 of the LH control module and pin 1 of the idle air control valve.

7 Try fitting a new LH control module, see also page 61.

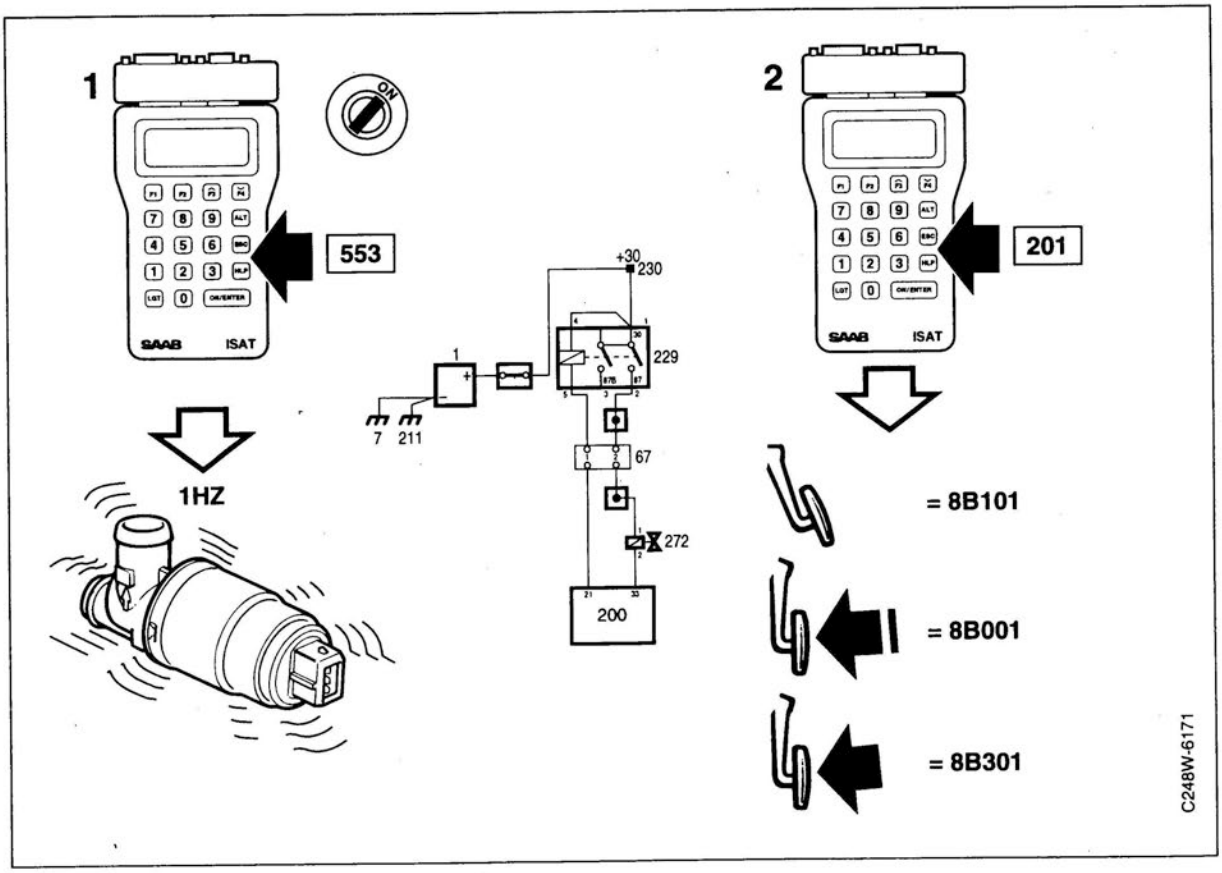
1
ON
553
SAAB ISAT
1HZ
+30
230
229
1
7 211
67
272
200
2
201
SAAB ISAT
= 8B101
= 8B001
= 8B301
C248W-6171

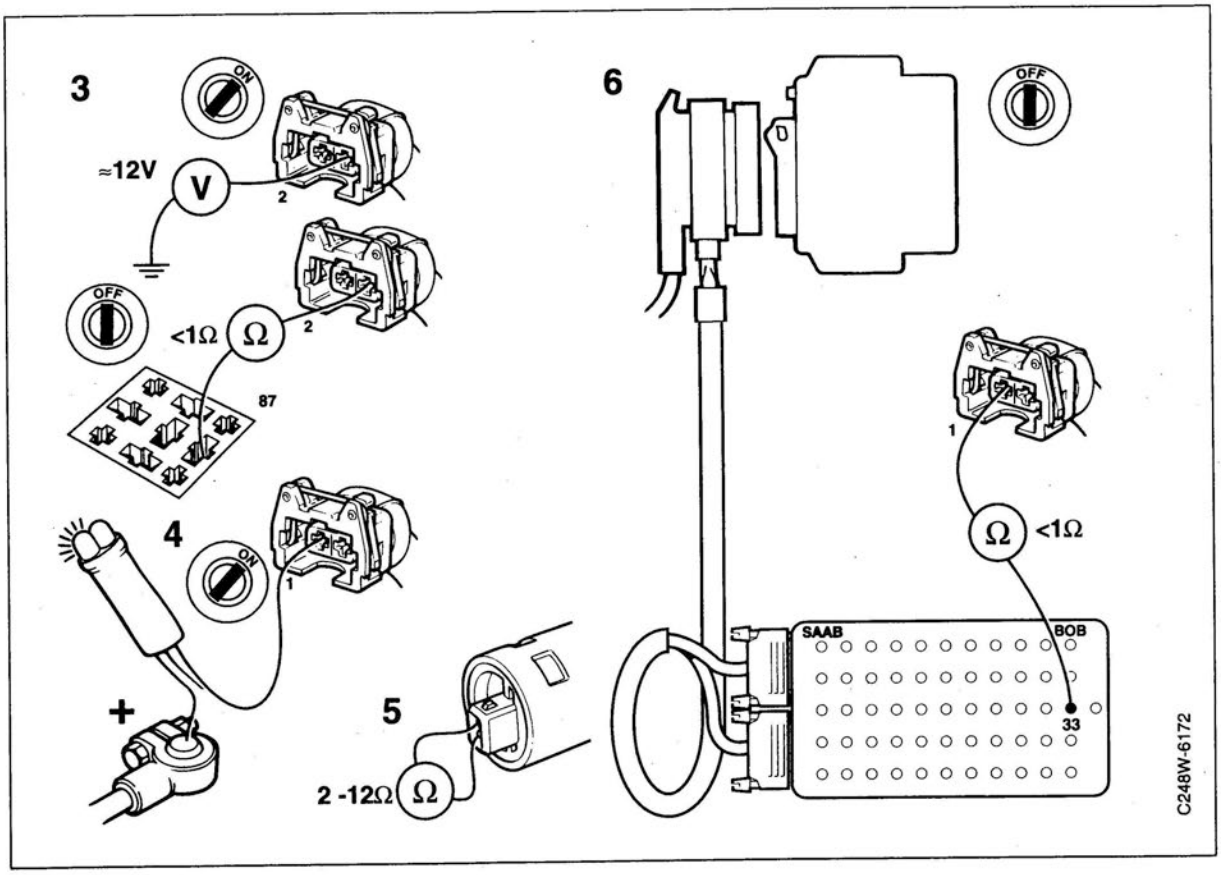
3
ON
≈12V
V
2
OFF
<1Ω
Ω
2
87
4
ON
1
+
5
2 -12Ω
Ω
6
OFF
1
Ω
<1Ω
SAAB
BOB
33
C248W-6172

ISAT SCAN TOOL	Cause of fault Idle air control valve malfunctioning.
Lamp-flash code	**Condition** No voltage alternating in connection with the output stage's internal monitoring, i.e. pulses to the idle air control valve. Probably caused by defective valve or wiring.
LH system test E010 E023	**Fault symptom** Uneven idling, high/low engine speed, no compensation for change in engine load, engine stalls.
Test data LH 2.2 Pin 10: 6 - 11 V Pin 23: 6 - 12 V Engine hot, idling speed	

Diagnostic procedure, LH 2.2

For fault diagnosis, see also "Checking the idle air control valve" on page 175.

1 Check the position of the throttle position switch by means of the LH tester or by taking manual readings, see "Checking/adjustment of the throttle position switch" on page 159.

2 With the ignition switch in the Drive position, check that battery voltage is present across pin 2 of the IAC valve connector and a good ground.
If voltage is present, go to point 3.
If it is not, check the lead between pin 2 of the idle air control valve and pin 87 of the main relay for continuity/shorting and operation of the relay.

3 Connect one lead of test LED 86 11 857 to the positive battery terminal and one lead to pins 1 and 3 of the idle air control valve connector. The lamp should light up in both cases.
If it does not, go to point 5.
If it does, go to point 4.

4 With the ignition switch in the OFF position and the idle air control valve connector unplugged, measure the resistance of the valve's two motor windings by taking a reading across pins 1 and 2 and also across pins 2 and 3.
The reading obtained should be 15 - 25 ohms in each winding.
If it is not, change the IAC valve.

5 Plug the Breakout Box into the car's wiring harness (LH control module not connected). Check the lead between pin 10 of the LH control module and pin 1 of the idle air control valve and also the lead between pin 23 of the control module and pin 3 of the idle air control valve.

6 Try fitting a new LH control module, see also page 61.

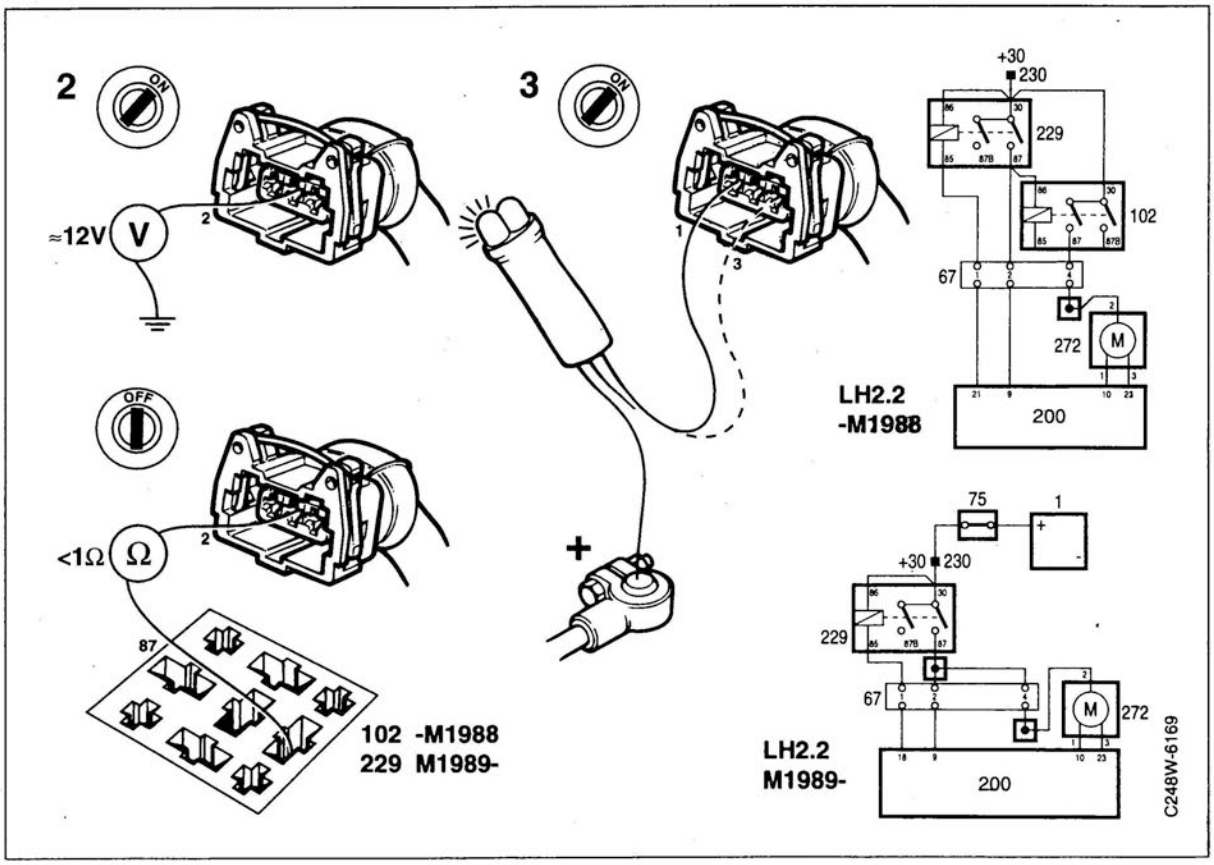
2
ON
≈12V
V
OFF
<1Ω
Ω
87
102 -M1988
229 M1989-
3
ON
+
+30
230
229
102
67
272
M
LH2.2
-M1988
200
75
1
+30
230
229
67
272
M
LH2.2
M1989-
200
C248W-6169

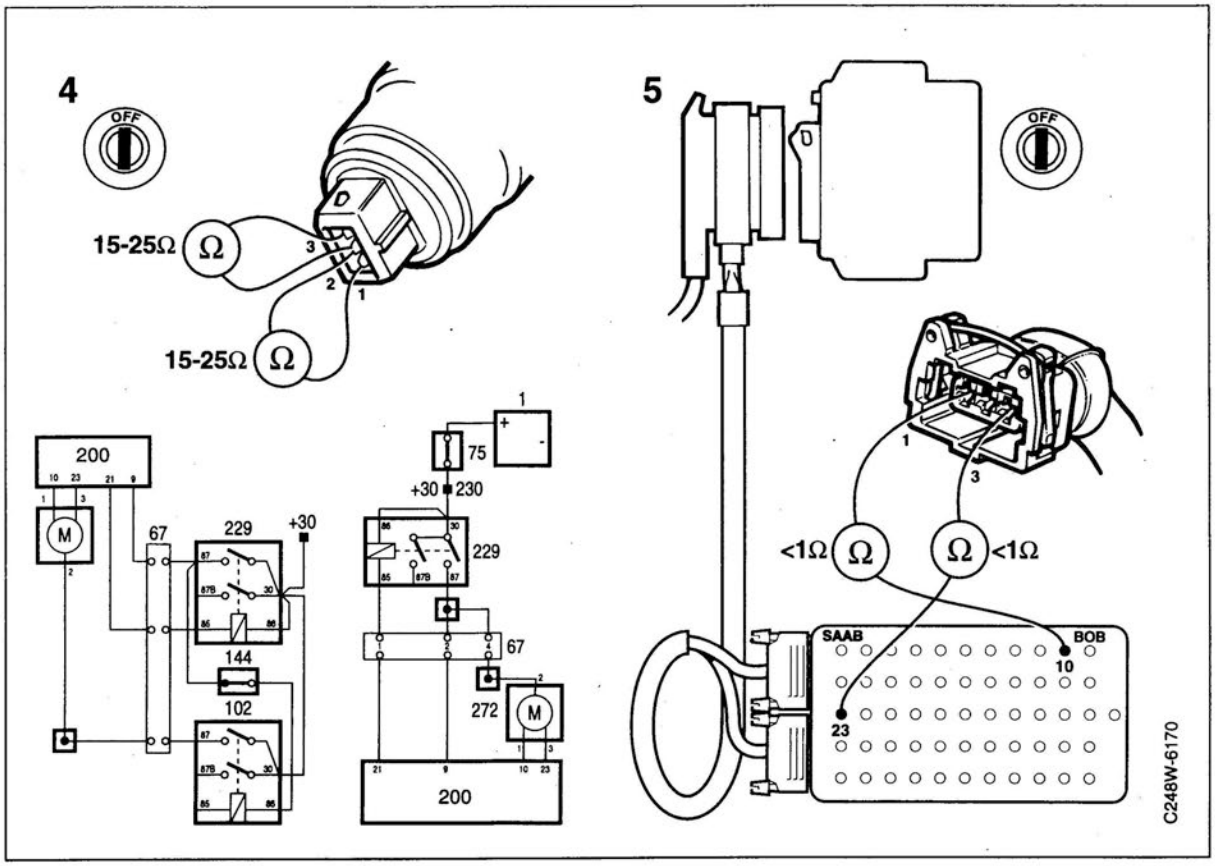
4
OFF
D
15-25Ω
Ω
3
2
1
15-25Ω
Ω
200
M
67
229
+30
144
102
1
75
+30
230
229
67
272
M
200
5
OFF
D
1
3
<1Ω
Ω
Ω
<1Ω
SAAB
BOB
10
23
C248W-6170

ISAT SCAN TOOL	Cause of fault
LH 2.4 58322/38322 LH 2.4.2. 1) 58372/38372 2) 58382/38382	EVAP canister purge valve operating circuit faulty. 1). No continuity or short circuit to ground in EVAP canister purge valve operating circuit. 2). EVAP canister purge valve operating circuit in constant connection with positive power supply. Caused by faulty valve or faulty wiring.
Lamp-flash code 12252	**Condition** No voltage alternating in connection with the output stage's internal monitoring (pulse to idle air control valve).
LH system test	**Fault symptom** CHECK ENGINE lamp (MIL) on. Poor drivability and idle speed control. Generates consequential faults. No adaptation can be carried out if the diagnostic trouble code is generated.
Test data Pin 27: Battery voltage when valve closed (ignition switched on). 0 V when valve open (ignition switched off).	

Diagnostic procedure

For fault diagnosis, see also "Checking the EVAP canister purge valve".

1 With the ignition switch in the Drive position, select command code 554 or carry out component testing with the self-diagnostics function.
Listen for the sound of the EVAP canister purge valve working (1 Hz).

2 Check that battery voltage is present across pin 2 of the valve and a good ground.
If it is not, check the lead between pin 2 of the valve connector and pin 87B of the main relay with the ignition in the OFF position.

3 Take a reading of the valve's resistance across pins 1 and 2.
If correct, a reading of 40 - 60 ohms should be obtained.
If it is not, change the EVAP canister purge valve.

4 With the ignition switched off and the LH control module and valve connectors unplugged, check the lead between pin 1 of the valve connector and pin 27 of the control module connector.

5 Try fitting a new control module, see page 61.

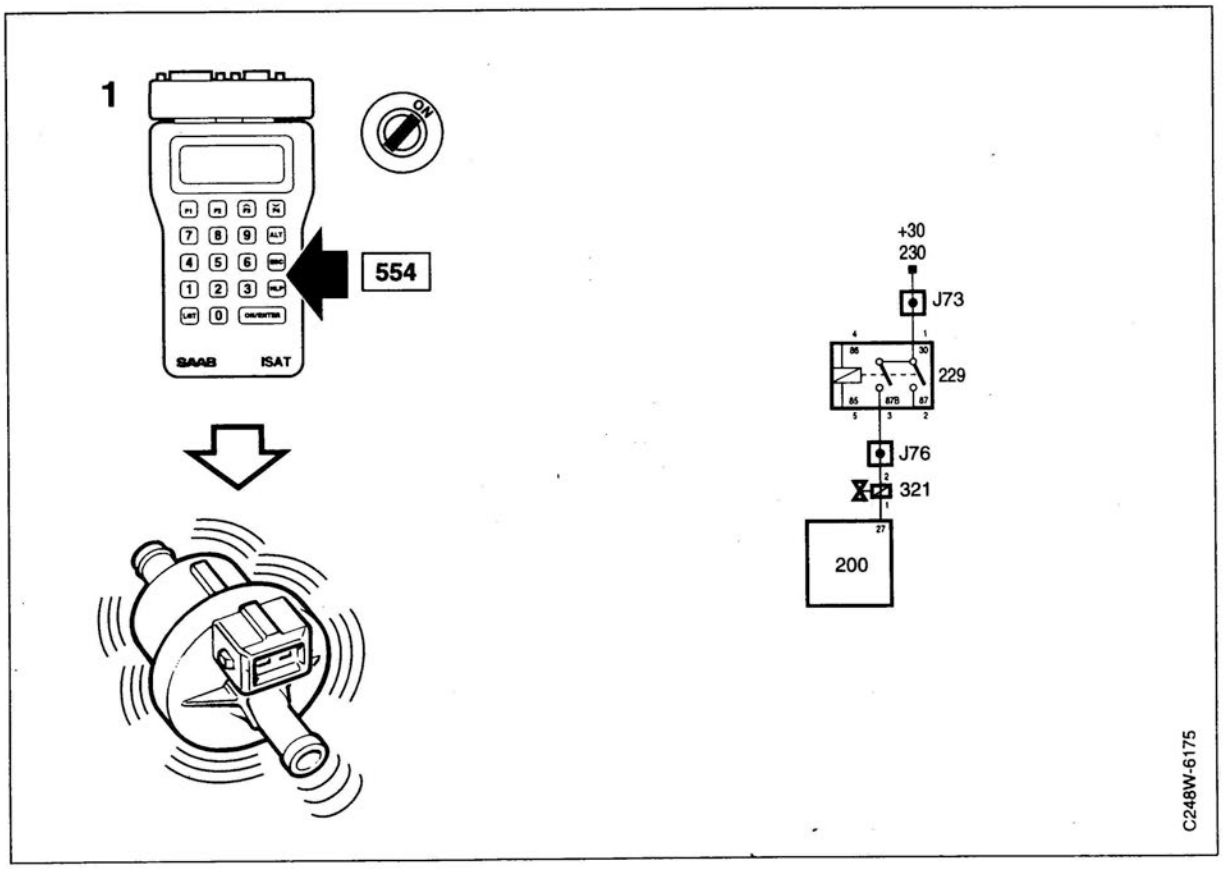
1
ON
554
SAAB
ISAT
+30
230
J73
229
J76
321
200
C248W-6175

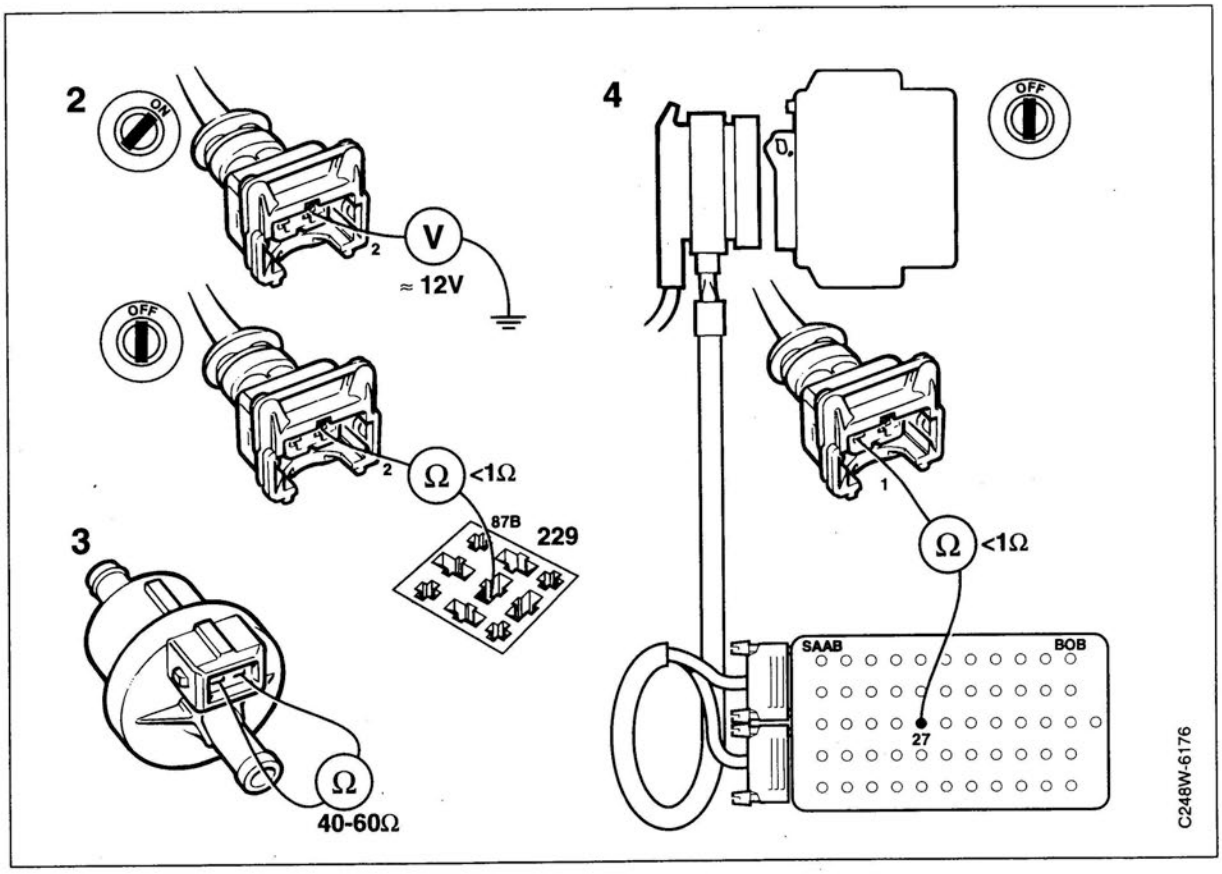
2
ON
V
≈ 12V
OFF
Ω
<1Ω
87B
229
3
Ω
40-60Ω
4
OFF
Ω
<1Ω
SAAB
BOB
27
C248W-6176

ISAT SCAN TOOL 58371/38371	**Cause of fault** Injectors, malfunctioning
Lamp-flash code 12241	**Condition** Multiplicative adaptation level 2 activated (engine running on lean mixture, mixture strength weakened by more than 20%).
LH system test E218	**Fault symptom** CHECK ENGINE lamp (MIL) on. Uneven running, misfiring, power down, consequential faults.
Test data LH 2.4, 2.4.1, 2.4.2 Pin 18: ~Battery voltage, LH control module not connected.	

Diagnostic procedure, LH 2.4, 2.4.1 and 2.4.2

Important

The fault might be due to one of the cylinders not firing. Ignition system fault diagnosis may therefore also be necessary, see the relevant section in the service manual.

For fault diagnosis, see also "Checking the injectors".

If the ISAT scan tool is not used, go to point 2.

1 With the ignition switch in the ON position, select command code 552 on the ISAT scan tool. Alternatively, component testing can be carried out with the self-diagnostics function.
Check that all injectors are working (15 Hz) by listening to them.
If they are working, continue fault diagnosis but bear in mind that intermittent faults may occur.

2 Ignition switch in the OFF position. Unplug all injector connectors. Connect a test LED to the connector of each injector (one at a time). Run the starter motor, check that the test LED flashes.
If it flashes, go to point 3.
If it does not, go to point 4.

3 With the connectors unplugged, take a resistance reading across the injector connector pins. The reading obtained should be 10 - 20 ohms.
If it is not, change the defective injector.

4 With the ignition in the ON position, check that battery voltage is present on pin 1 of each injector connector.
If it is, go to point 5.
If it is not, check the lead between pin 1 of each connector and pin 87 of the main relay.

5 With the ignition switch in the OFF position and the LH control module unplugged, check the lead between pin 2 of each injector and pin 18 (LH 2.2 pin 13) of the connector.

6 Carry out flow capacity measurement, see "Checking injector flow capacity".

7 If the fault persists in spite of this, try fitting a new control module. See page 61.

Note

If an injector is disconnected, the engine will be running on a richer mixture.

jxh

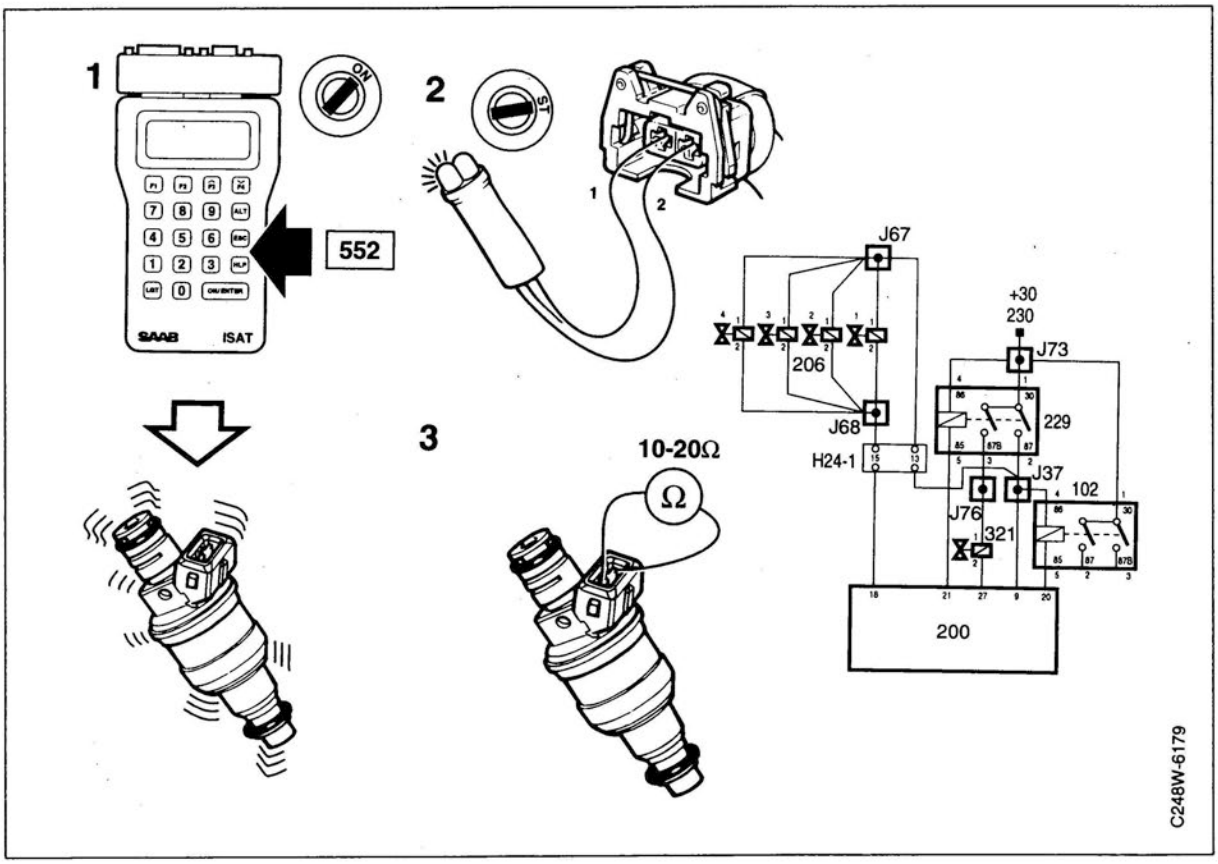
1
ON
552
SAAB
ISAT
2
ST
1
2
J67
206
J68
+30
230
J73
229
H24-1
J37
102
J76
321
200
3
10-20Ω
Ω
C248W-6179

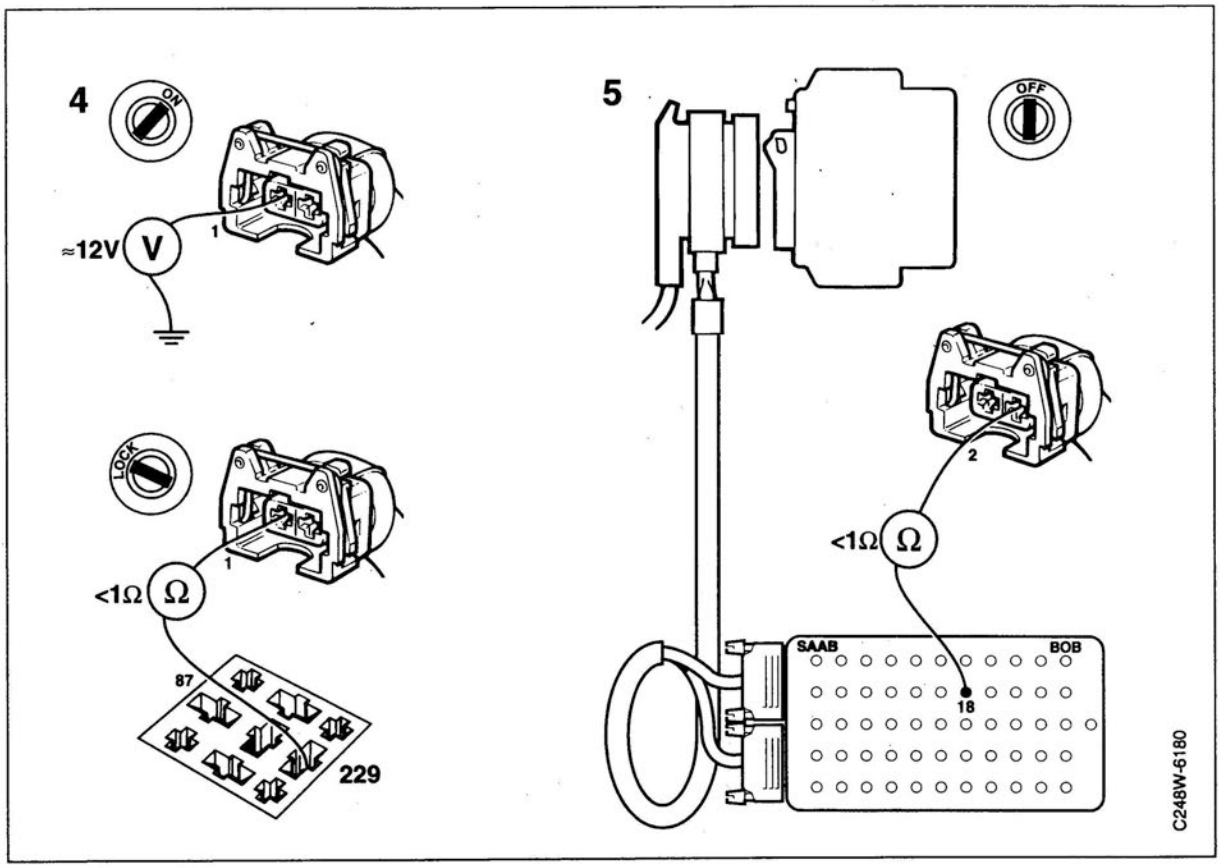
4
ON
≈12V
V
1
LOCK
<1Ω
Ω
1
87
229
5
OFF
2
<1Ω
Ω
SAAB
BOB
18
C248W-6180

ISAT SCAN TOOL	Cause of fault Injectors, malfunctioning
Lamp-flash code	Condition Multiplicative adaptation level 2 activated (engine running on lean mixture, mixture strength weakened by more than 20%).
LH system test E213	Fault symptom Uneven running, misfiring, power down, consequential faults.
Test data LH 2.2 Pin 13: ~Battery voltage, LH control module not connected.	

Diagnostic procedure, LH 2.2

Important

The fault might be due to one of the cylinders not firing. Ignition system fault diagnosis may therefore also be necessary, see the relevant section in the service manual.

For fault diagnosis, see also "Checking the injectors".

1 Ignition switch in the OFF position. Unplug all injector connectors. Connect a test LED to the connector of each injector (one at a time). Run the starter motor, check that the test LED flashes.
If it flashes, go to point 2.
If it does not, go to point 3.

2 With the connectors unplugged, take a resistance reading across the injector connector pins. The reading obtained should be 10 - 20 ohms.
If it is not, change the defective injector.

3 With the ignition in the ON position, check that battery voltage is present on pin 1 of each injector connector.
If it is, go to point 4.
If it is not, check the lead between pin 1 of each connector and pin 87 of the main relay.

4 With the ignition switch in the OFF position and the LH control module unplugged, check the lead between pin 2 of each injector and pin 13 of the connector.

5 Carry out flow capacity measurement, see "Checking injector flow capacity".

6 If the fault persists in spite of this, try fitting a new control module. See page 61.

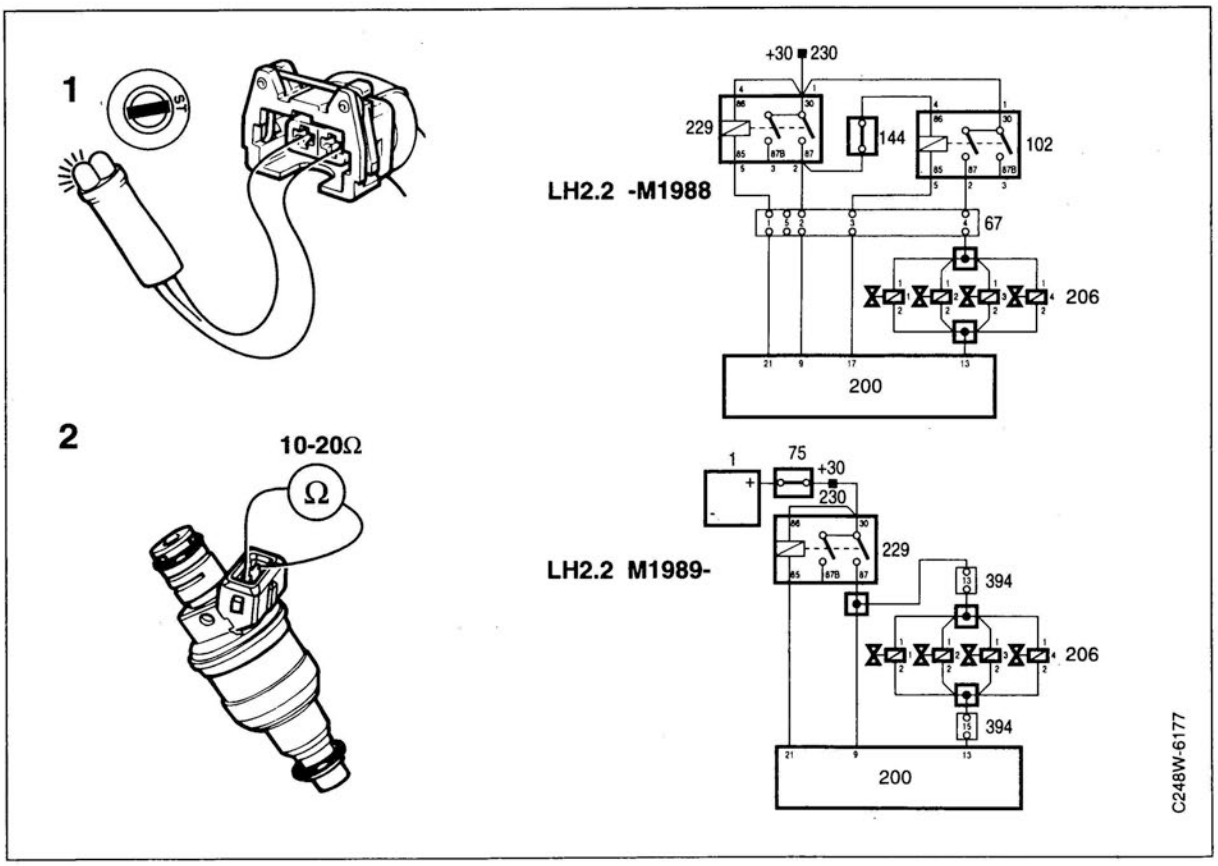
1
ST
+30
230
229
144
102
LH2.2 -M1988
67
206
200
2
10-20Ω
Ω
1
75
+30
230
229
LH2.2 M1989-
394
206
394
200
C248W-6177

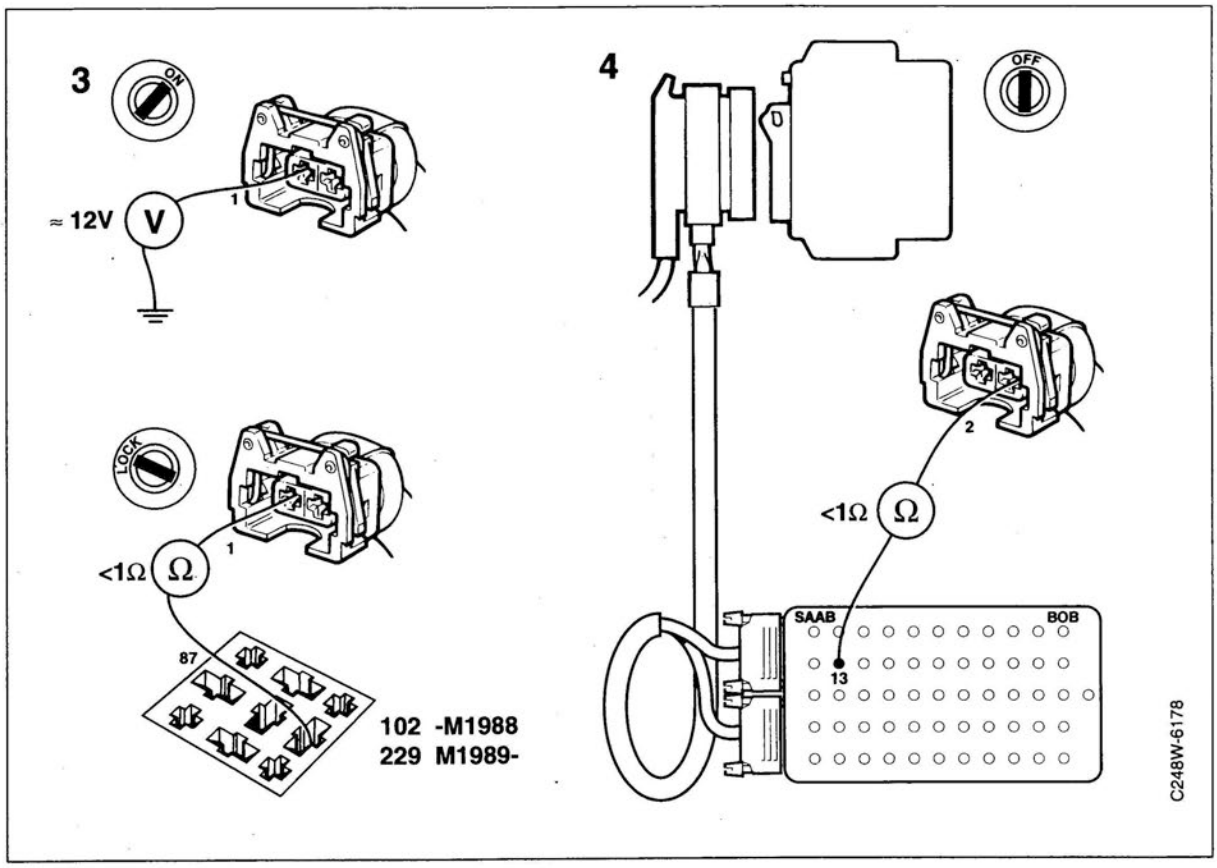
3
ON
≈ 12V
V
1
LOCK
<1Ω
Ω
1
87
102 -M1988
229 M1989-
4
OFF
2
<1Ω
Ω
SAAB
BOB
13
C248W-6178

ISAT SCAN TOOL 67192	**Cause of fault** Control module fault, fault in EPROM (internal memory)
Lamp-flash code 12233	**Condition** The check sum does not coincide with the programmed value.
LH system test	**Fault symptom** CHECK ENGINE lamp (MIL) on. Engine stops or will not start.
Test data	

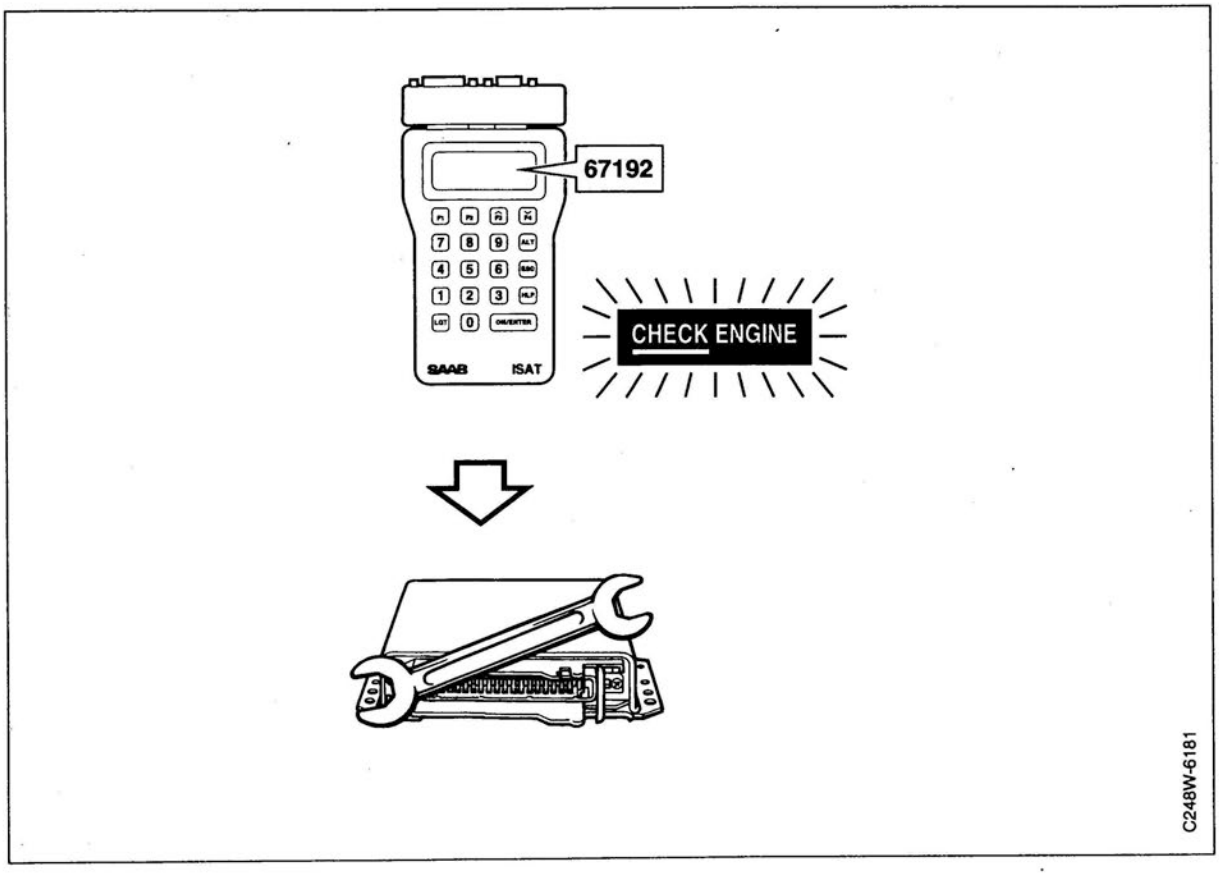

Diagnostic procedure

Change the LH control module, see page 61.

Fault diagnosis, systems/components

	See page
Connection of pressure testing equipment	146
Checking system pressure	147
Checking residual pressure	148
Checking fuel pump flow capacity	149
Checking the fuel pressure regulator	150
Checking injector flow capacity	151
Checking the main relay	153
Checking the fuel pump relay	155
Checking the pressure switch (LH 2.2, turbo engine)	157
Checking the temperature sensor	158
Checking and adjusting the throttle position switch (LH 2.2, 2.4 and 2.4.1)	159
Checking the injectors	161
Checking the mass air flow sensor	162
Checking the operation of filament (hot wire) burn-off	164
Checking control module signals to injectors	165
Fuel shut-off on starting	167
Checking full-load enrichment (LH 2.2)	168
Checking the warm-up period	169
Checking idling speed increase on engagement of A/C compressor (cars with auxiliary air valve)	170
Checking change in idling speed on engagement of A/C compressor (cars with idle air control valve), not ETS	171
Checking the oxygen sensor	96
Checking the auxiliary air valve, M1985	172
Checking the idle air control valve	173
Checking the EVAP canister purge valve	176
Checking the induction system	177
Pressure-testing the turbo system	178
Checking the bypass valve	179
Checking the catalytic converter	180

jxh

Connection of pressure testing equipment

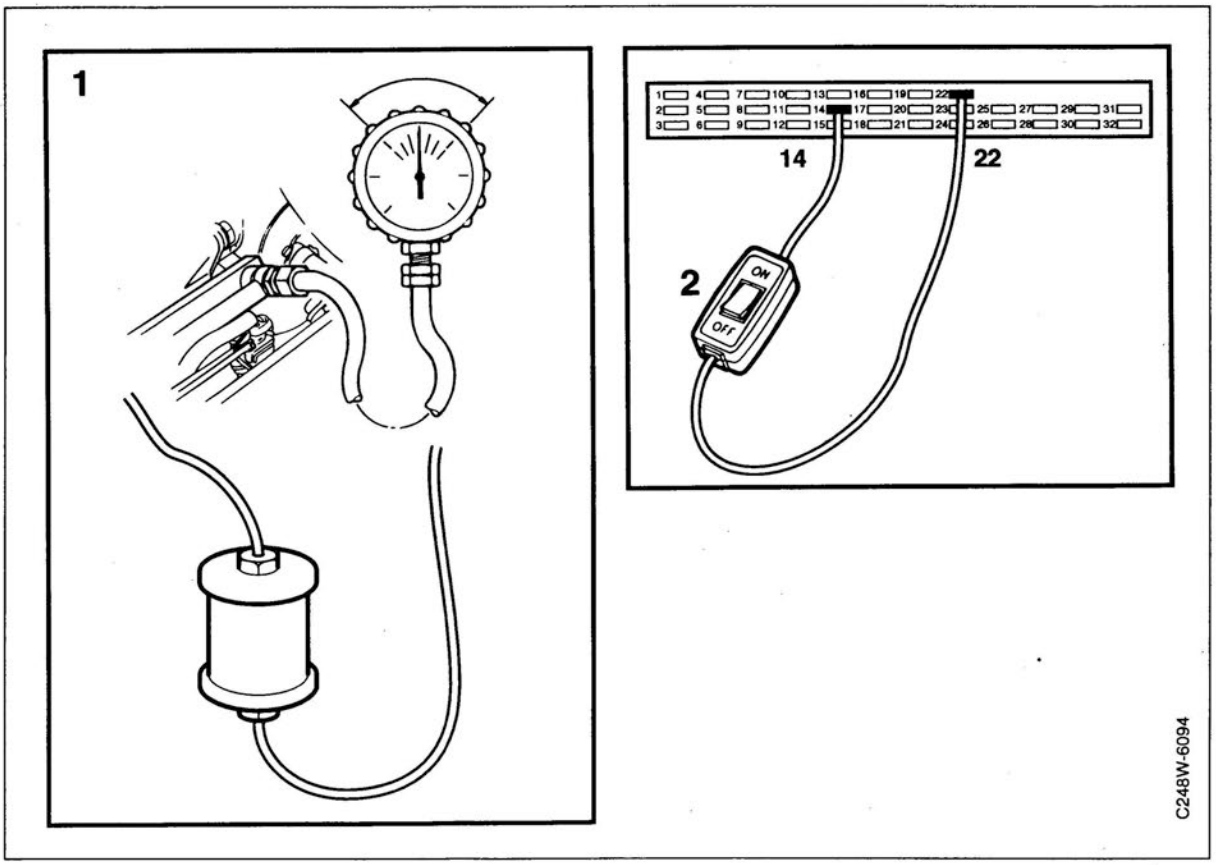

> ⚠ **WARNING**
>
> When carrying out any work involving fuel, the fuel supply or fuel injection, make sure that the premises are well ventilated.
>
> If approved extraction equipment for fuel vapour is available, use it.
>
> Since prolonged contact with fuel may give rise to skin irritation, suitable gloves should be worn.
>
> No smoking anywhere in the vicinity!
>
> Always make sure that a suitable fire extinguisher is near at hand.

Tools:
- Fuel pressure testing equipment 83 93 852
- Cable with switch 83 93 886

1 **-M1987 (-M1988 for cars without cat.)**
Undo the banjo union on the bottom of the fuel filter. On these cars the fuel pressure regulator is mounted on the right of the fuel-injection rail.
M1988- (M1989- for cars without cat.)
Make connection to the fuel-injection rail's pressure inlet.
Connect fuel pressure testing equipment 83 93 852 and its banjo bolt.
Make sure that no seal remnants enter the fuel system. Fit new seals.
Suspend the pressure gauge vertically to avoid incorrect readings (use a cloth or the like to mop up any fuel that leaks out).

2 Open the cover of the main fuse box. Extract fuses 14 and 22. Connect cable with switch 83 93 886 so that power can be supplied to the fuel pump.
Check that the switch is in the OFF position.

Checking system pressure

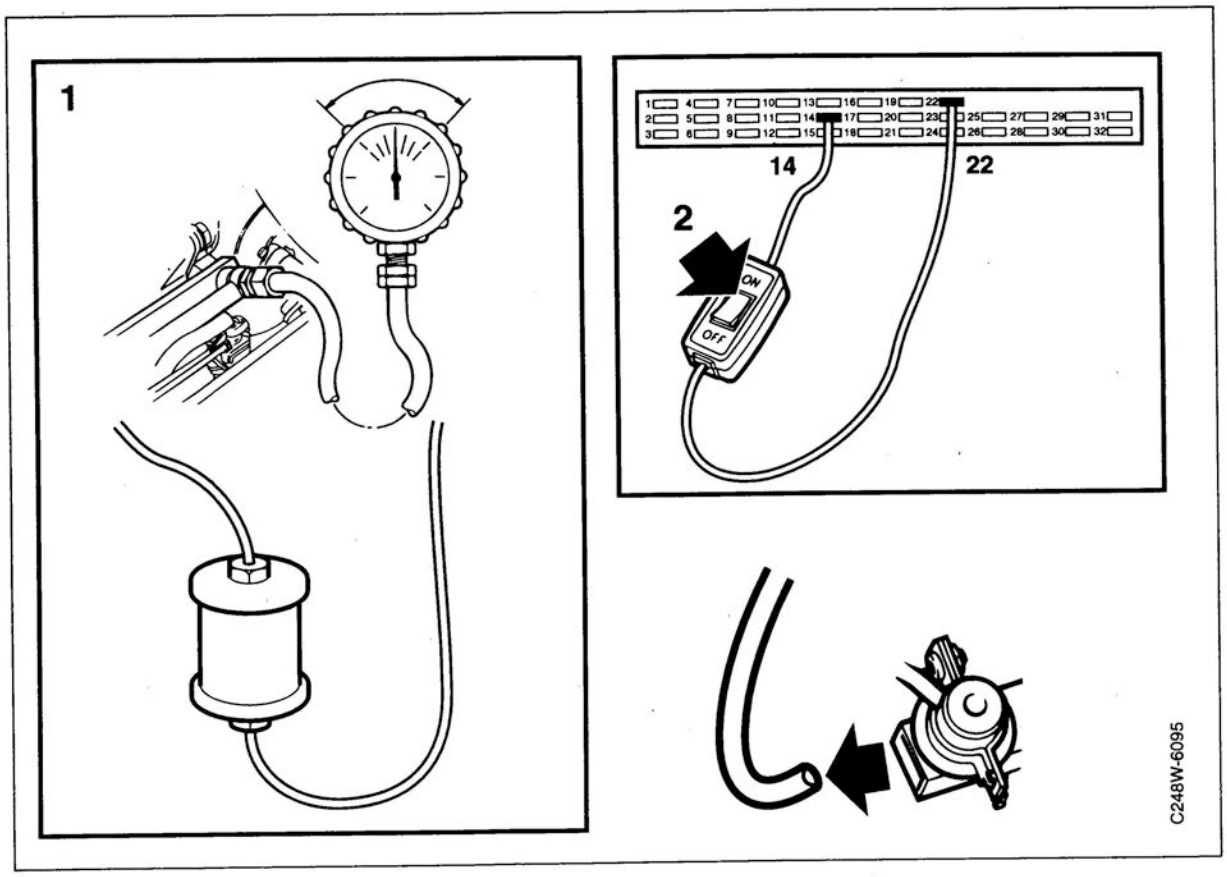

1 Connect as described in "Connection of pressure testing equipment".

2 Start the fuel pump by setting the switch to the ON position. System pressure should rise to the prescribed value as shown in the table, see "Technical data, Summary of LH components".

System pressure too high:
Stop the fuel pump by setting the switch to OFF. Disconnect the return line from the fuel pressure regulator. Blow through the return line.
If the line is open, change the fuel pressure regulator.
If the line is clogged, remove the obstruction or change the return line.
The fault could also be in the non-return valve where the return line is connected to the tank or the fuel pump, see Service Manual 2:3 "Fuel system and Air induction system".

System pressure too low:
Check the level of the fuel in the tank.
Check that the fuel system has no leaks.
Check the fuel pressure regulator, see "Checking the fuel pressure regulator".

Checking residual pressure

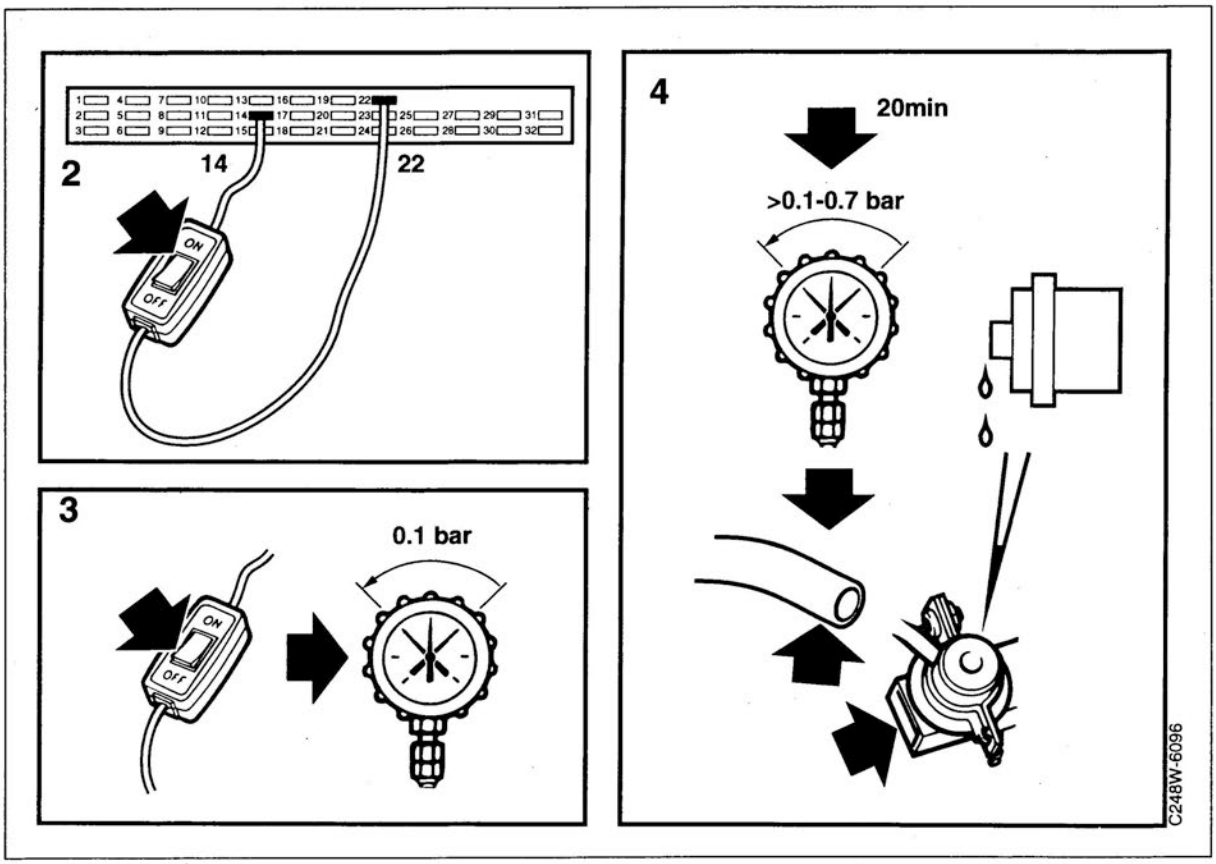

1 Connect as described in "Connection of pressure testing equipment".

2 Start the fuel pump by setting the switch to the ON position. Read off the system pressure. See the table in "Technical data, Summary of LH components" for the prescribed value.

3 Stop the fuel pump by setting the switch to OFF. The pressure should now immediately drop 0.1 - 0.2 bar (1.4 - 2.8 psi).

4 If the residual pressure has dropped more than 0.7 bar after about 20 minutes, check the fuel pressure regulator and the fuel pump's non-return valve for leakage.

Quick check

- Check the fuel lines for external leakage.
- Start the pump and run up the pressure. Then turn off the pump again.
- Remove the return line from the fuel pressure regulator. If fuel runs out of the regulator, it is faulty. Change the fuel pressure regulator.
- If the regulator is OK and the pressure drops rapidly, there is probably a leak in the non-return valve. Try fitting a replacement and check again.
- If the pressure drops slowly, the fault is probably in an injector. Remove and check.

Useful tip

On cars with a long return hose of rubber which can be pinched off without damage, it might be possible to flush out any foreign objects lodged in the fuel pressure regulator's non-return valve.

- Start the pump.
- Pinch the hose briefly, max. 1 second.
- Repeat several times.

Checking fuel pump flow capacity

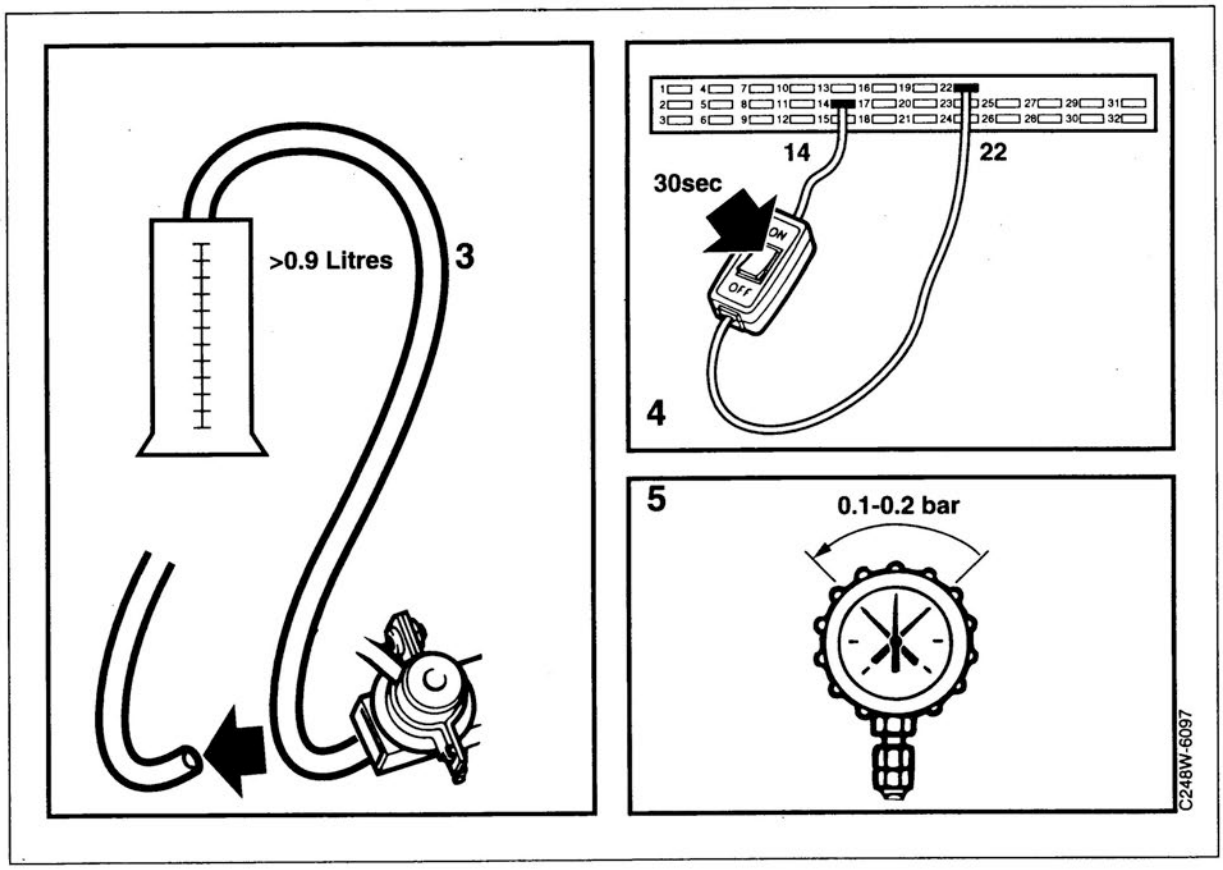

⚠ WARNING

When carrying out any work involving fuel, the fuel supply or fuel injection, make sure that the premises are well ventilated.

If approved extraction equipment for fuel vapour is available, use it.

Since prolonged contact with fuel may give rise to skin irritation, suitable gloves should be worn.

No smoking anywhere in the vicinity!

Always make sure that a suitable fire extinguisher is near at hand.

Tools:
- Test hose ø8 mm
- Graduated measuring glass, approx. 2 l

1 Connect as described in "Connection of pressure testing equipment".

2 Set the switch to OFF: Disconnect the return hose from the fuel pressure regulator.

3 Connect a test hose for the return flow. Place its free end in a 2-litre measuring glass.

4 Start the fuel pump by setting the switch to ON. Measure the fuel pump's flow capacity by running it for 30 seconds.
Read off the amount of fuel in the measuring glass. It should be at least 0.9 litres (Bosch) or 0.7 litres (Walbro).

5 If the pressure drops more than 0.1 - 0.2 bar (1.4 - 2.8 psi) but flow capacity is OK, change the fuel pressure regulator.

6 If the fuel pump's flow capacity is not OK:
- Check that the voltage present across the fuel pump's connections is at least 11.5 V.
- Check that the fuel lines are not nipped or clogged.
- Check that the fuel filter is not clogged.
- The vacuum port in the pump is faulty. Change the fuel pump.

Checking the fuel pressure regulator

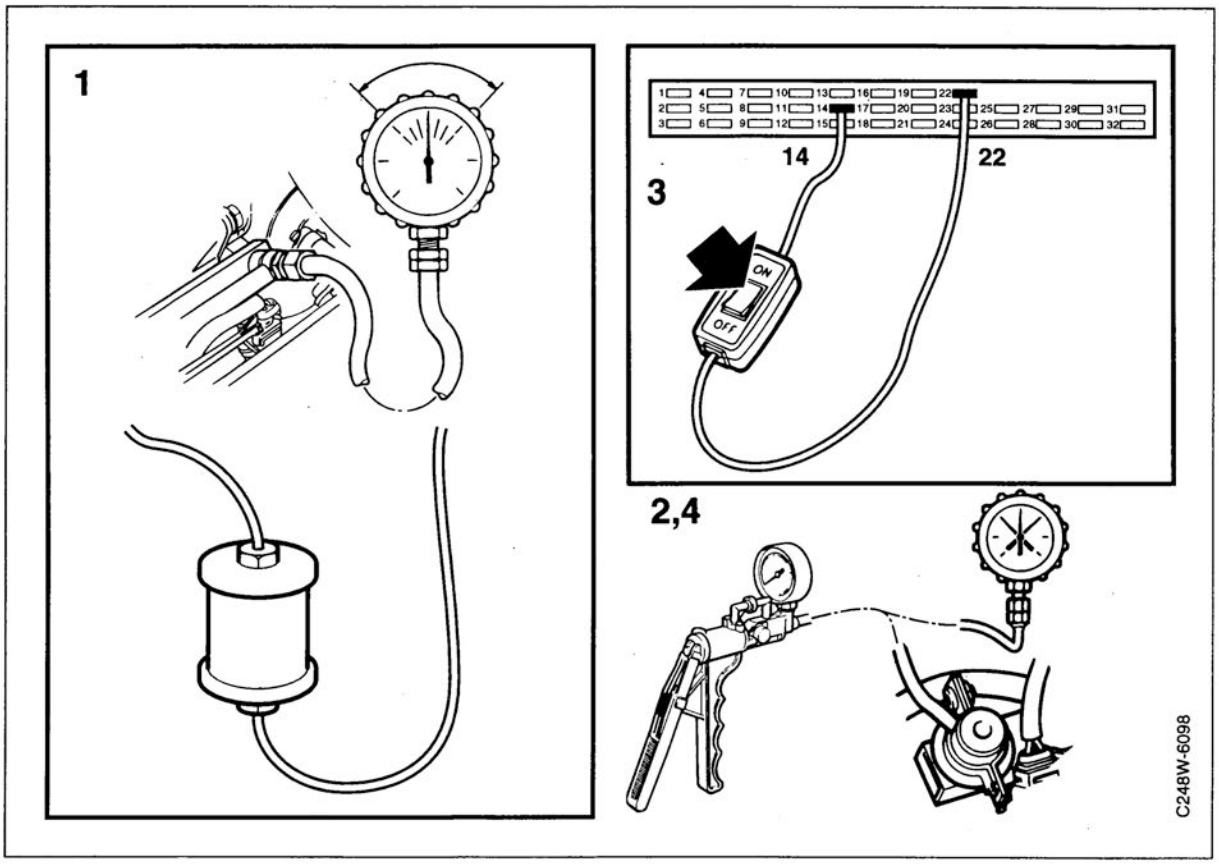

Tools:
- Pressure/vacuum pump 30 14 883
- Pressure testing equipment 83 93 514

1 Connect as described in "Connection of pressure testing equipment".

2 Connect pressure testing equipment 83 93 514 to the fuel pressure regulator's suction/pressure connection.
If fuel is present in the suction/pressure connection, change the fuel pressure regulator.
Suspend the pressure gauge vertically to avoid incorrect readings.
Connect pressure/vacuum pump 30 14 883 to test equipment 83 93 514.

3 Start the fuel pump by setting the swtich to ON. System pressure should rise to the prescribed value, see table.

4 Increase the negative pressure in the fuel pressure regulator by means of the vacuum pump. System pressure should now drop by as much as the reading on the pressure gauge, see table.

Pump up overpressure in the fuel pressure regulator by means of the pressure/vacuum pump. System pressure should now increase by as much as the reading on the pressure gauge, see table.

System pressurebar (psi)	2.5 (36)	2.8 (40)	3.0 (43)
+0.2 (+2.9)	2.7 (39)	3.0 (43)	3.2 (46)
+0.4 (5.8)	2.9 (42)	3.2 (46)	3.4 (49)
+0.6 (8.6)	3.1 (45)	3.4 (49)	3.6 (52)
atm bar (psi)	2.5 (36)	2.8 (40)	3.0 (43)
-0.6 (8.6)	1.9 (28)	2.2 (32)	2.4 (35)
-0.4 (5.8)	2.1 (30)	2.4 (35)	2.4 (35)
-0.2 (2.9)	2.3 (33)	2.6 (37)	2.8 (40)

Checking injector flow capacity

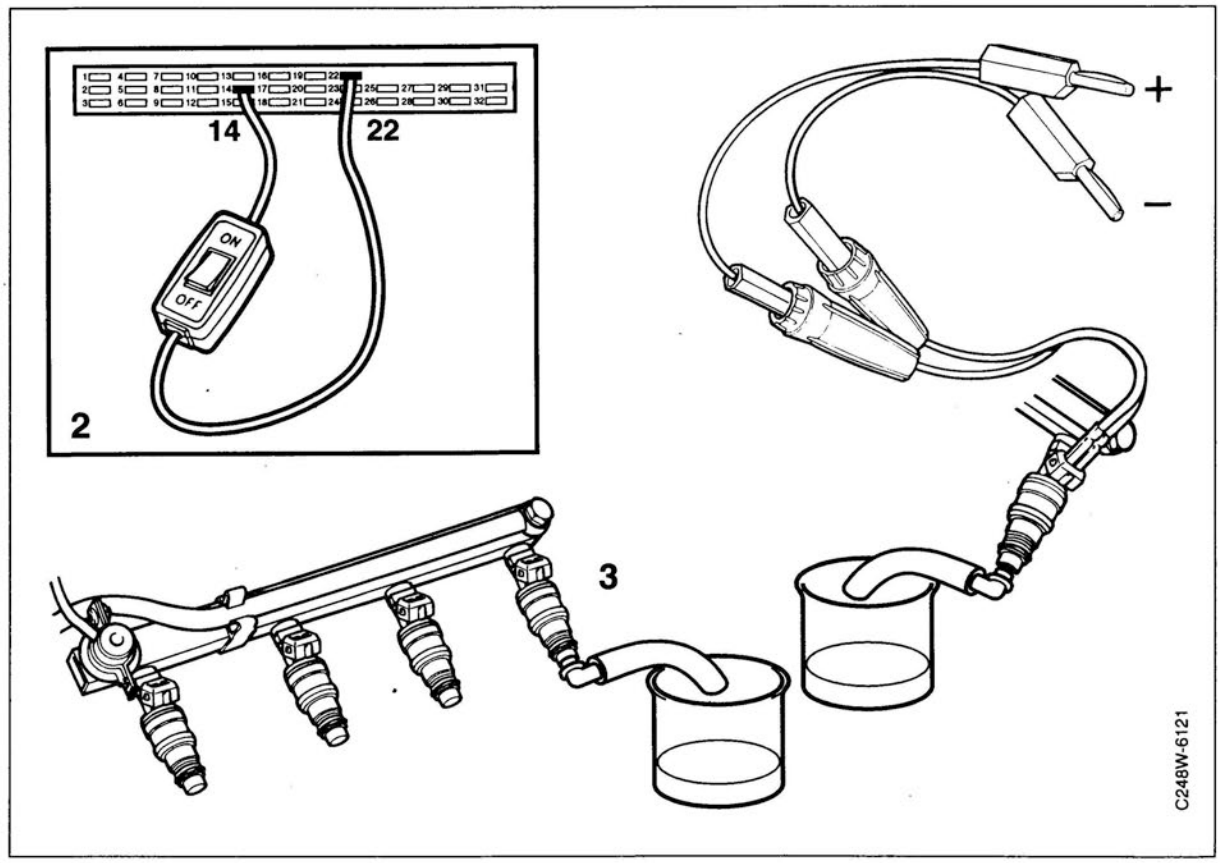

Tools:
- Cable, fault diagnosis LH 83 93 886
- Jumper cable 86 11 345
- Test cable, female 86 11 410
- Test hose, flow measurement 83 94 405
- Graduated measuring glass

⚠ WARNING

When carrying out any work involving fuel, the fuel supply or fuel injection, make sure that the premises are well ventilated.

If approved extraction equipment for fuel vapour is available, use it.

Since prolonged contact with fuel may give rise to skin irritation, suitable gloves should be worn.

No smoking anywhere in the vicinity!

Always make sure that a suitable fire extinguisher is near at hand.

1 Remove the fuel rail with injectors but **do not** remove the injectors from the rail, see under "Injectors" in the "Adjustment/replacement of components" section.

2 Start the fuel pump by connecting fault diagnosis cable 83 93 886 to fuses 14 and 22.
Check that the injectors do not leak.

3 Connect the hose to each of the injectors in turn. Place the free end of the hose in a measuring glass. Connect the injector in question to battery voltage by means of cable assembly 86 11 410 and 86 11 345.
Activate the injector for exactly 30 seconds. Then check the amount of fuel in the measuring glass, see table on next page.

Checking injector flow capacity (contd.)

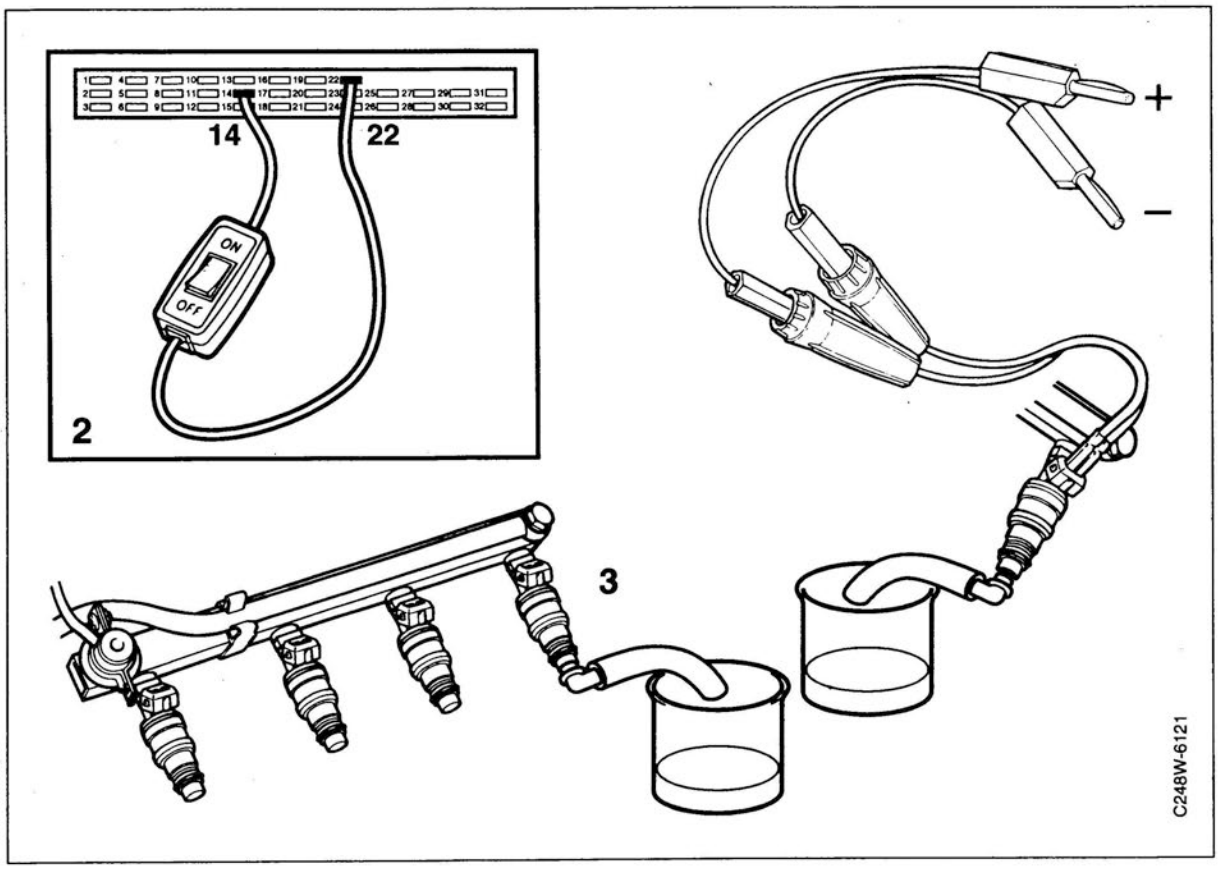

Fuel pressure regulator, opening pressure (bar)	min. (ml/30 s)
2.5 (Turbo 1985-86)	104
2.8 (Turbo 1987-)	110
3.0 (B202i)	90
3.0 (B234i)	125
3.0 Turbo (B234)	145

Check that flow capacity is the same for all injectors.

The specified flow rates are valid at room temperature (20 ± 1°C).

Injector opening duration is proportional to engine load. The greater the load, the longer the opening duration.

4 Change any faulty injectors.

5 Fit the fuel-injection rail and injectors. Be sure to fit the injector connectors to the right injectors.

Checking the main relay

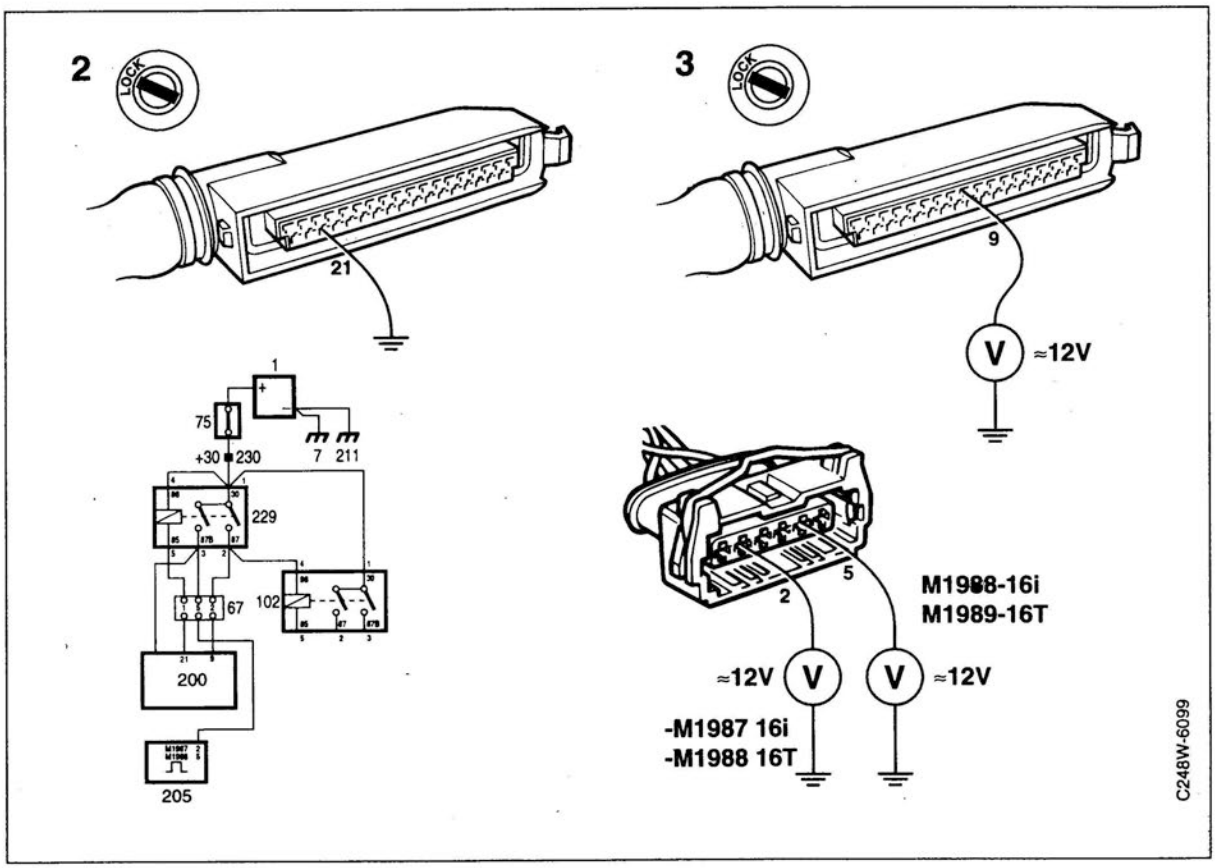

Tools:
- Breakout Box 86 11 006
- Test cables 86 11 352

1 Unplug the LH control module and mass air flow sensor connectors. Connect Breakout Box 86 11 006.

2 Ground pin 21.

3 Check that battery voltage is present at:
- Control module connector pin 9
- Mass air flow sensor
  pin 2 (-M1987 fuel injection engine, - M1988 turbo engine)
  pin 5 (M1988- fuel injection engine, M1989- turbo engine)

  If voltage is present at these points the main relay and appurtenant leads are OK.
  If it is not, continue checking as described below.

4 Remove the glove box and withdraw the relay panel.

Checking the main relay (contd.)

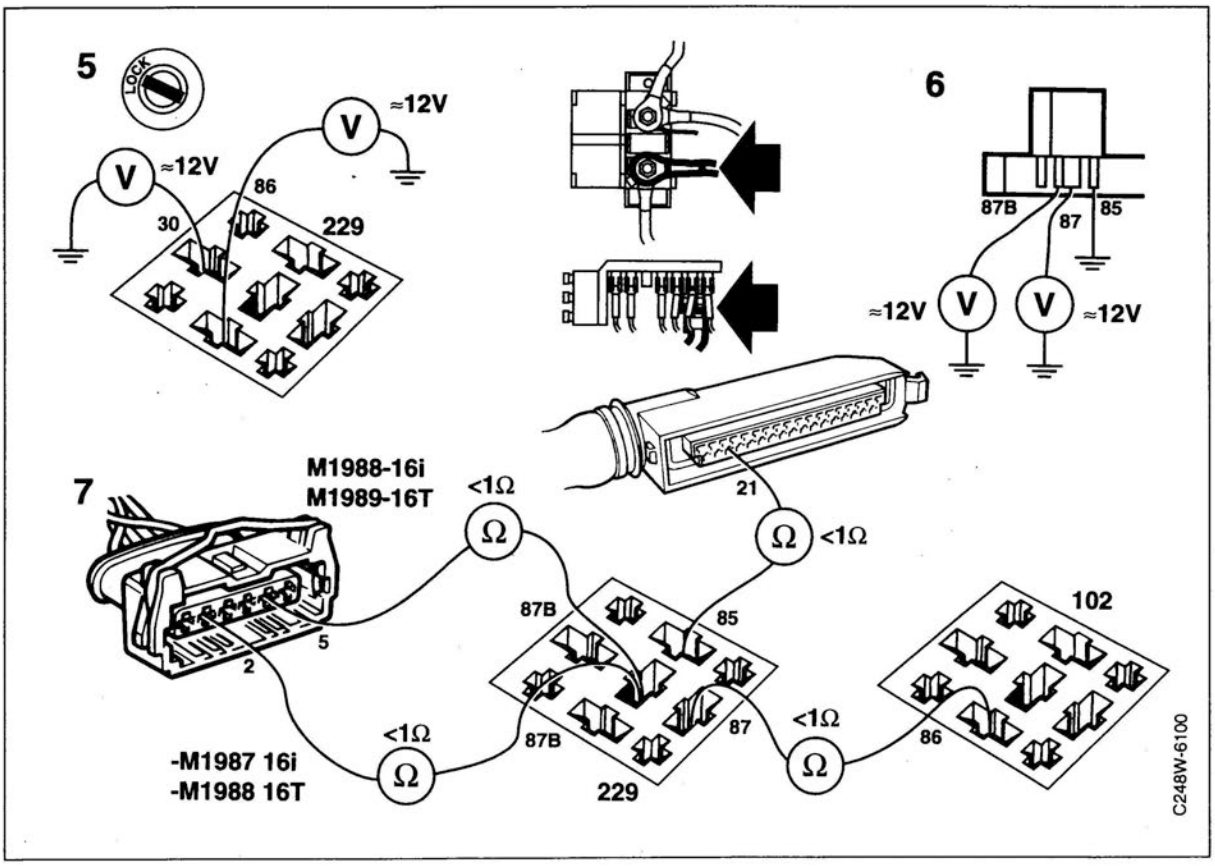

5 Check that battery voltage is present on relay terminals 30 and 86.
If it is not, check that the lead to the positive terminal block is OK.

6 Ground terminal 85 and check that battery voltage is present on terminals 87 and 87B.
If it is, continue as described in point 7.
If it is not, change the main relay.

7 Check the lead from relay terminal 85 to LH control module pin 21 and the lead from relay terminal 87 to fuel pump relay terminal 86 (via the pressure switch, LH 2.2 turbo engine) and the lead from relay terminal 87B to the mass air flow sensor's:
   pin 2 (-M1987 fuel injection engine, -M1988 turbo engine)
   pin 5 (M1988- fuel injection engine, M1989- turbo engine)

Checking the fuel pump relay

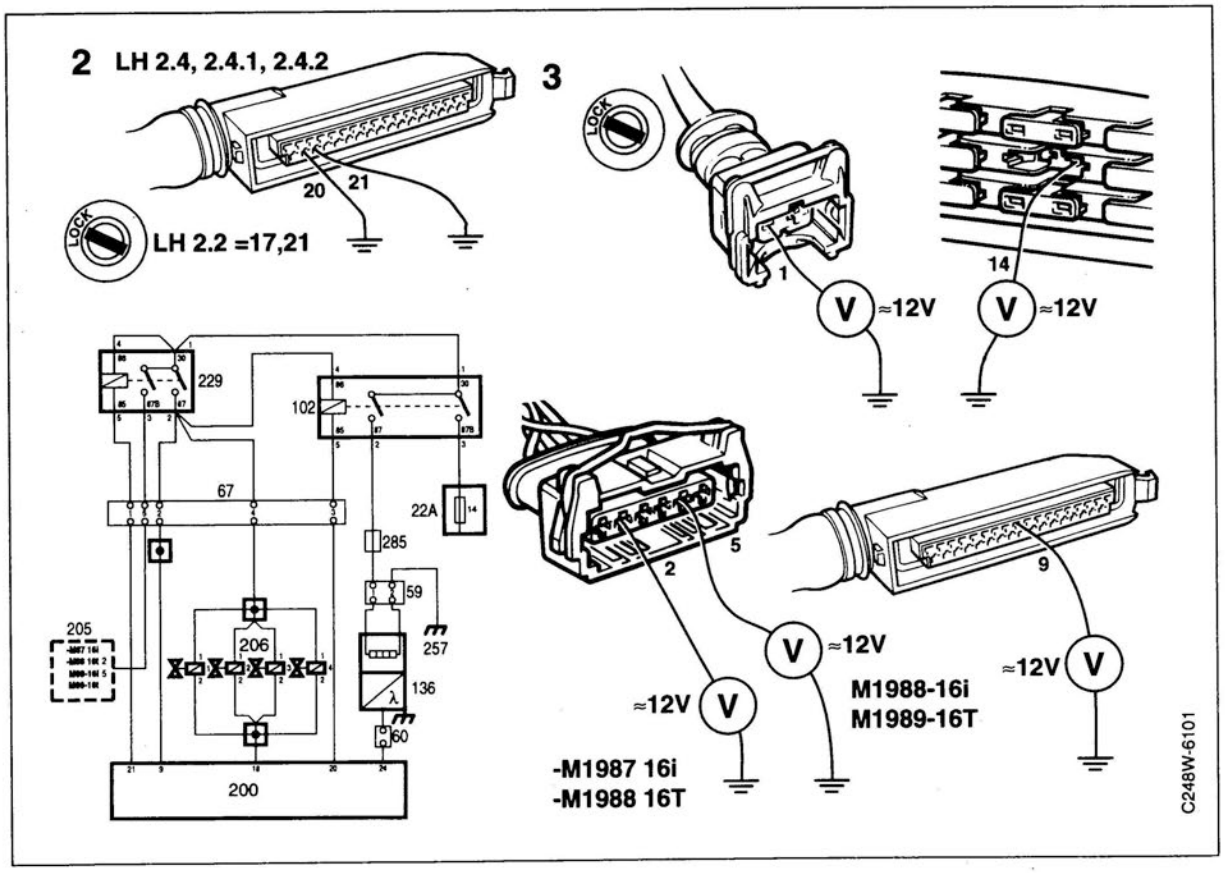

Tools:
- Multimeter
- Breakout Box 86 11 006
- Test cables 86 11 352

1 Unplug the LH control module and mass air flow sensor connectors. Connect Breakout Box 86 11 006.

2 Ground pins 20 and 21 (pins 17 and 21 for LH 2.2).

3 Check that battery voltage is present at:
- the injectors
- Control module connector pin 9
- The mass air flow sensor's
  pin 2 (-M1987 fuel injection engine, -M1988 turbo engine)
  pin 5 (M1988- fuel injection engine, M1989- turbo engine)
- Fuse 14

If voltage is present at these points the fuel pump relay and appurtenant leads are OK.
If it is not, continue checking as described in the following.

Checking the fuel pump relay (contd.)

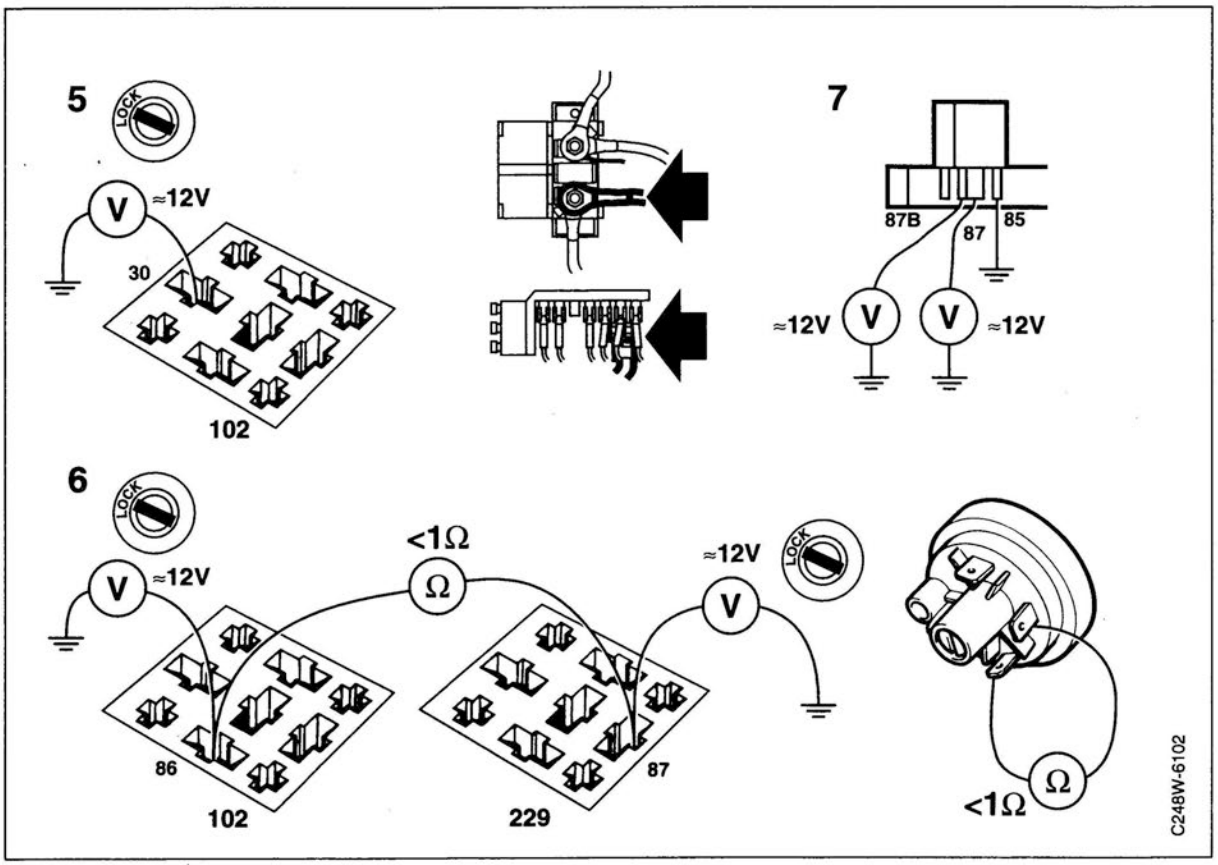

4 Remove the glove box and withdraw the relay panel.

5 Check that battery voltage is applied to relay terminal 30. If it is not, check the lead to main relay terminal 30.

6 Check that voltage is present on terminal 86 of the fuel pump relay (relay operated).
If it is not, check that voltage is present on main relay terminal 87.
If it is not, see "Checking the main relay".
If voltage is present, check that the pressure switch (LH 2.2 turbo engine) and the lead between pump relay terminal 86 and main relay terminal 87 is OK (main relay not operated).

7 Ground pump relay terminal 85 and check that terminals 87 and 87B are live (main relay operated). If they are not, change the relay.

Checking the pressure switch (LH 2.2)

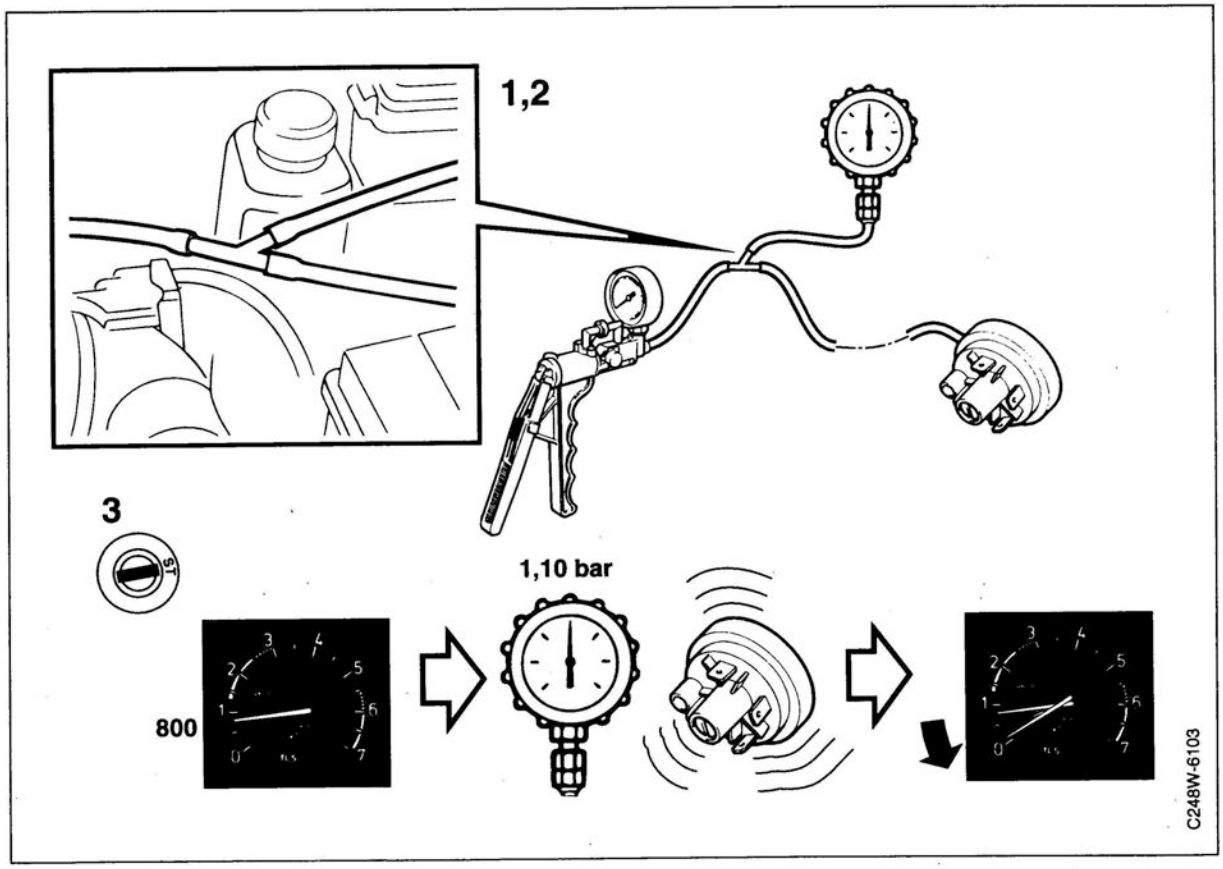

Tools:
- Pressure testing equipment 83 93 514
- Pressure/vacuum pump 30 14 883

1 Disconnect the pressure switch hose at the intake manifold and plug the connection.

2 Connect pressure test equipment 83 93 514 to the pressure switch hose and connect pressure/vacuum pump 30 14 883 to the pressure gauge T-piece.

3 Start the engine and pump up the pressure.
If the engine stops before or after:
1.10 ± 0.05 bar (cars without catalytic converter)
0.95 ± 0.03 bar (cars with catalytic converter)
change the pressure switch.

Checking the temperature sensor

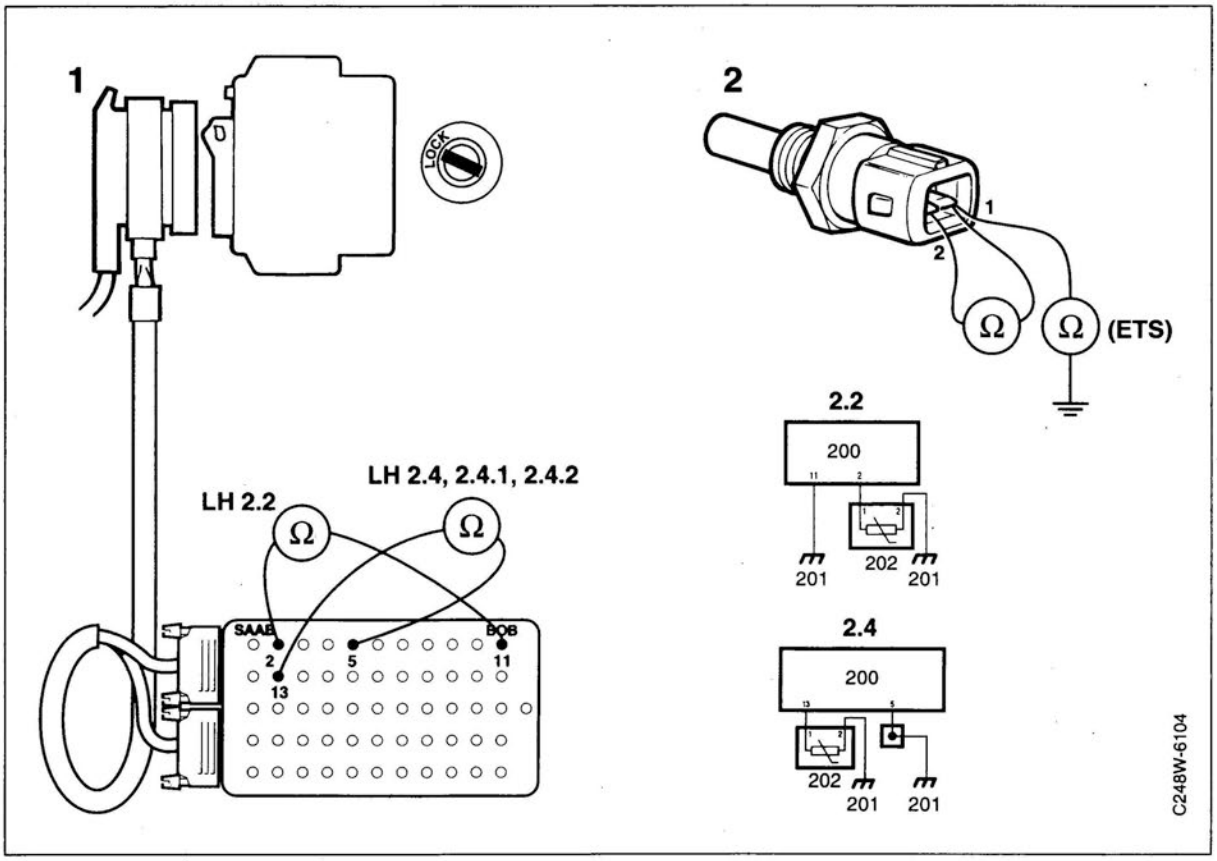

Tools:

- Multimeter
- Breakout box 86 11 006

The LH control module connector should be unplugged.

1 Connect the Breakout Box. Take temperature sensor readings by connecting the multimeter's test prods for:
LH 2.2
to control module connector pins 2 and 11
LH 2.4, 2.4.1 and 2.4.2
to control module connector pins 5 and 13

2 If the readings obtained are not OK, unplug the temperature sensor connector.
Take temperature sensor readings again. If the readings are still not OK, change the temperature sensor.

3 An ISAT scan tool can be used on M1991- cars equipped with LH 2.4 and LH 2.4.2. Select command code 250. The temperature will be shown on the ISAT scan tool display.

Resistance at different temperatures

°C	°F	Ohms
-20	-4	15700 ±10 %
-10	14	9500 ±10 %
0	32	5800 ±10 %
10	50	3800 ±10 %
15	58	3000 ±8 %
20	68	2600 ±7 %
25	76	2000 ±6 %
30	86	1700 ±5 %
80	176	320 ±5 %

Checking and adjusting the throttle position switch LH 2.2, 2.4 and 2.4.1

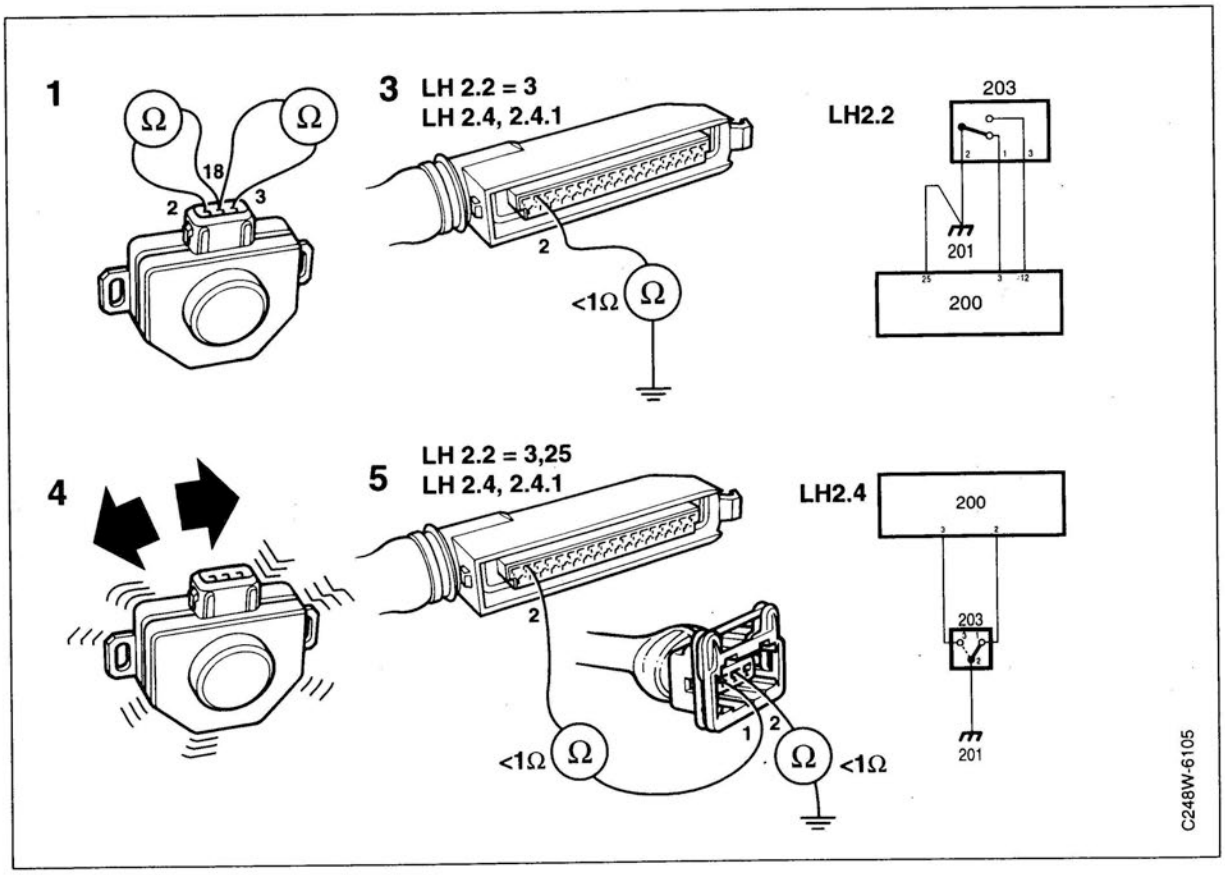

Tools:
- Multimeter
- Breakout Box 86 11 006
- Test cable 86 11 410

A faulty or incorrectly adjusted throttle position switch will cause difficulty in adjusting idling speed correctly. In addition, it may also give rise to fuel enrichment problems or ignition problems.

Always carry out idling speed adjustment before adjusting the throttle position switch, see "Adjustment of idling speed".

1 Check that the circuit is closed between pins 2 and 18 in the closed throttle position and between pins 3 and 18 in the wide open throttle position. If it is not, change the throttle position switch.

2 Unplug the LH control module connector. Plug in the Breakout Box.

3 Connect the multimeter to:
LH 2.2
pin 3 and ground
LH 2.4 and LH 2.4.1
pin 2 and ground
Check that the circuit is closed.
Alternatively, an ISAT scan tool can be used for M1990- LH 2.4, 2.4.1 and 2.4.2. Select command code 201.
Component and signal testing with the self-diagnostics function and LH tester can also be used.

4 Rotate the throttle butterfly and check the reading on the multimeter. If in proper working order, the circuit should be broken as soon as the throttle butterfly leaves the closed throttle position. If this does not happen, adjust the position of the throttle butterfly (closed in the closed throttle position).
Check that the setting is correct. When the throttle lever is actuated, a metallic clicking sound should be heard from the switch when it leaves the closed throttle position.

5 If the circuit is not closed, check:
LH 2.2
the lead from pin 3 of the connector to pin 1 of the position switch (203) and the lead between pin 2 of the position switch and ground.
LH 2.4 and LH 2.4.1
the lead between pin 2 of the connector and pin 1 of the position switch (203) and the lead between pin 2 of the position switch and ground.

Checking and adjusting the throttle position switch LH 2.2, 2.4 and 2.4.1 (contd.)

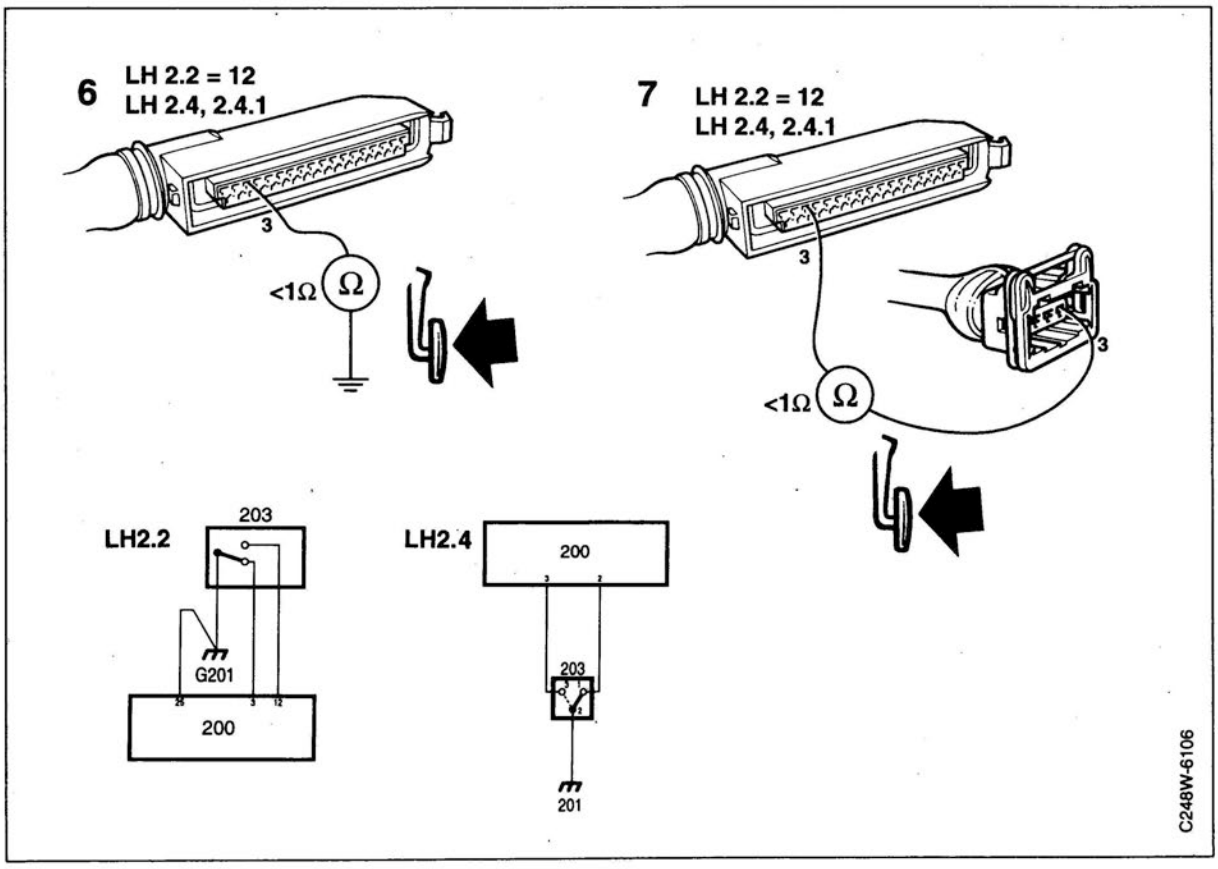

6 Connect the multimeter to:
LH 2.2
pin 12 and ground
LH 2.4 and LH 2.4.1
pin 3 and ground
. If the position switch is in proper working order the circuit should close when the throttle butterfly is rotated through 72°, i.e. near the wide open throttle position.

7 If this does not happen, check:
LH 2.2
the lead between pin 12 of the connector and pin 3 of the position switch (203)
LH 2.4, 2.4.1
the lead between pin 3 of the connector and pin 3 of the position switch (203).
If the wiring is OK but the position switch does not work properly, change the position switch.

Checking the injectors

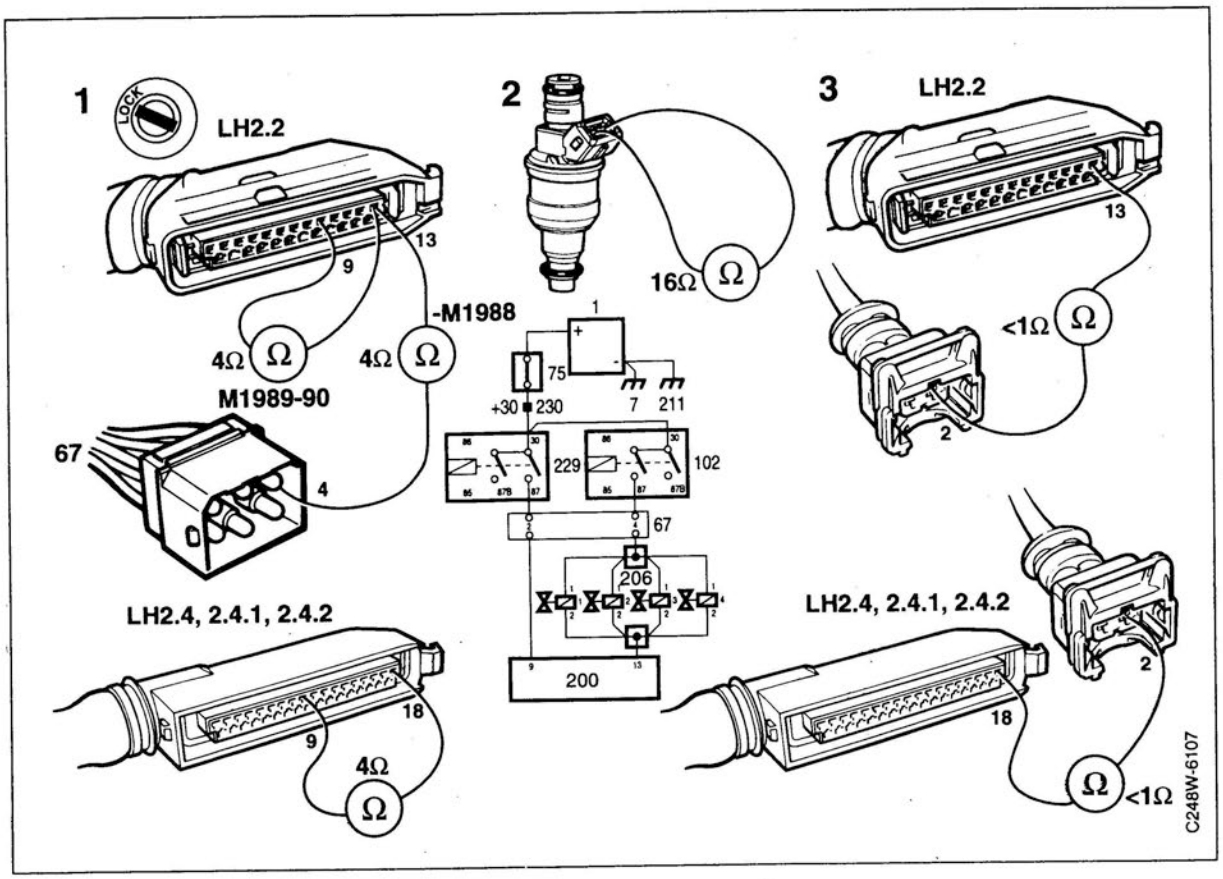

Tools:
- Multimeter
- Breakout Box 86 11 006
- Test cables 86 11 410 and 86 11 352

Before starting work, unplug the LH control module and mass air flow sensor connectors.

1 Connect the Breakout Box. Take resistance readings across:
<u>LH 2.2 -M1988</u>
pin 13 and pin 4 of connector 67
<u>LH 2.2 M1989-1990</u>
pin 13 and pin 9
<u>LH 2.4, 2.4.1, 2.4.2</u>
pin 18 and pin 9
The readings obtained should be 4 ohms in each case.
If the readings obtained are not OK, check the resistance of each injector separately.

2 Unplug the injector connector. Connect the multimeter to the injector to check its resistance.
An injector in perfect working order should have a resistance of 16 ohms at 20°C (68°F).
If this resistance reading is not obtained, change the injector.

3 If correct resistance readings are obtained, check the wiring from pin 13 (LH 2.2) or pin 18 (LH 2.4, 2.4.1, 2.4.2) of the control module connector to the following injector connections:
<u>LH 2.2 -M1988</u>
take a reading between the injector and connector 67
<u>LH 2.2 M1989-1990</u>
take a reading between the injector and pin 9
<u>LH 2.4, 2.4.1, 2.4.2</u>
take a reading between the injector and pin 18.

Checking the mass air flow sensor

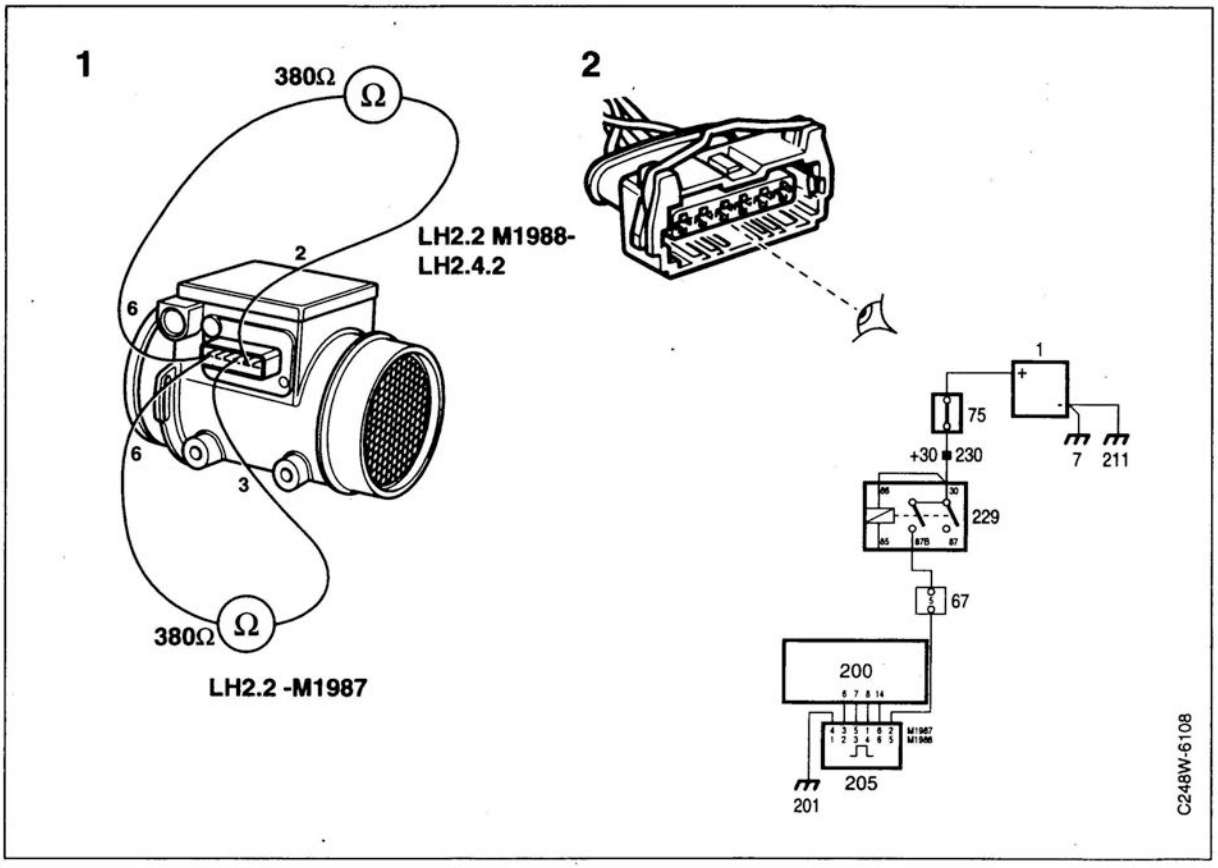

In connection with diagnosing faults on and/or carrying out repairs to the LH 2.2 and LH 2.4 fuel injection systems on model year 1988 and later cars, it is important to observe the following:

Mass air flow sensor of plastic

This mass air flow sensor must **never** be replaced by a mass air flow sensor of aluminium. If this is done, the LH control module will be ruined.

LH control module in fuel injection systems with a mass air flow sensor of plastic

This LH control module must **never** be replaced by an LH control module designed for fuel injection systems with a mass air flow sensor of aluminium.

Mass air flow sensors of plastic are fitted to the following versions of model year 1988 cars:

9000i/S with catalytic converter (LH 2.4)
9000i without catalytic converter (LH 2.2)

All versions of model year 1989 and later cars are fitted with mass air flow sensors of plastic.

Tools:
- Multimeter
- Breakout Box 86 11 006
- Test cables 86 11 410

The CHECK ENGINE lamp (MIL) comes on in the event of a fault in the mass air flow sensor.

1 Unplug the mass air flow sensor connector. Connect a multimeter to the mass air flow sensor pins as follows:
<u>LH 2.2 -M1987</u>
pins 3 and 6
<u>LH 2.2 M1988-1990 + LH 2.4.2 without cat.</u>
pins 2 and 6
Adjust to 380 ohms. If it cannot be adjusted to the correct value, change the mass air flow sensor.

2 Check that the pins in the connector and mass air flow sensor are free from corrosion.
Check that the wire mesh screens in the ends of the mass air flow sensor are intact and clean.

Checking the mass air flow sensor (contd.)

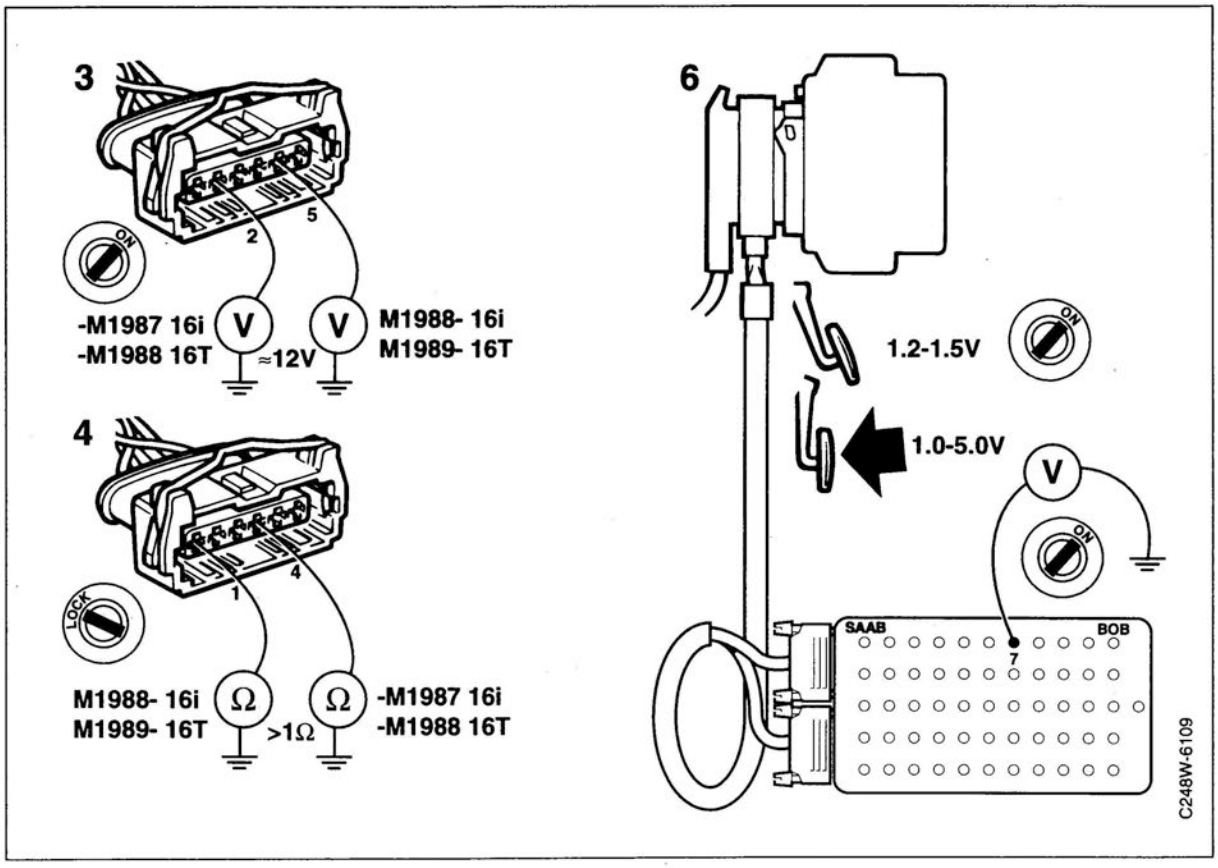

3 Check the positive power supply with the ignition switch in the Drive position.
<u>-M1987 fuel injection engine, -M1988 turbo engine</u>
pin 2
<u>M1988- fuel injection engine, M1989- turbo engine</u>
pin 5

4 Check the connection to ground
<u>-M1987 fuel injection engine, -M1988 turbo engine</u>
pin 4
<u>M1988- fuel injection engine, M1989- turbo engine</u>
pin 1

5 Check filament (hot wire) burn-off, see "Checking the operation of filament (hot wire) burn-off".

6 Connect Breakout Box 86 11 006 to the LH control module and check the load signal on pin 7.
1.2 - 1.5 V with the ignition switched on (engine not running)
1.0 - 5.0 V, depending on engine load (engine running).

7 Unplug the Breakout Box and connect the LH control module.
Check the CO reading (cars without cat.), see "Checking and adjusting the CO value".
Check the pulse ratio (LH 2.2 with cat. -1987 fuel injection engine and -M1988 turbo engine), see "Adjustment/replacement of components".

Checking the operation of filament (hot wire) burn-off

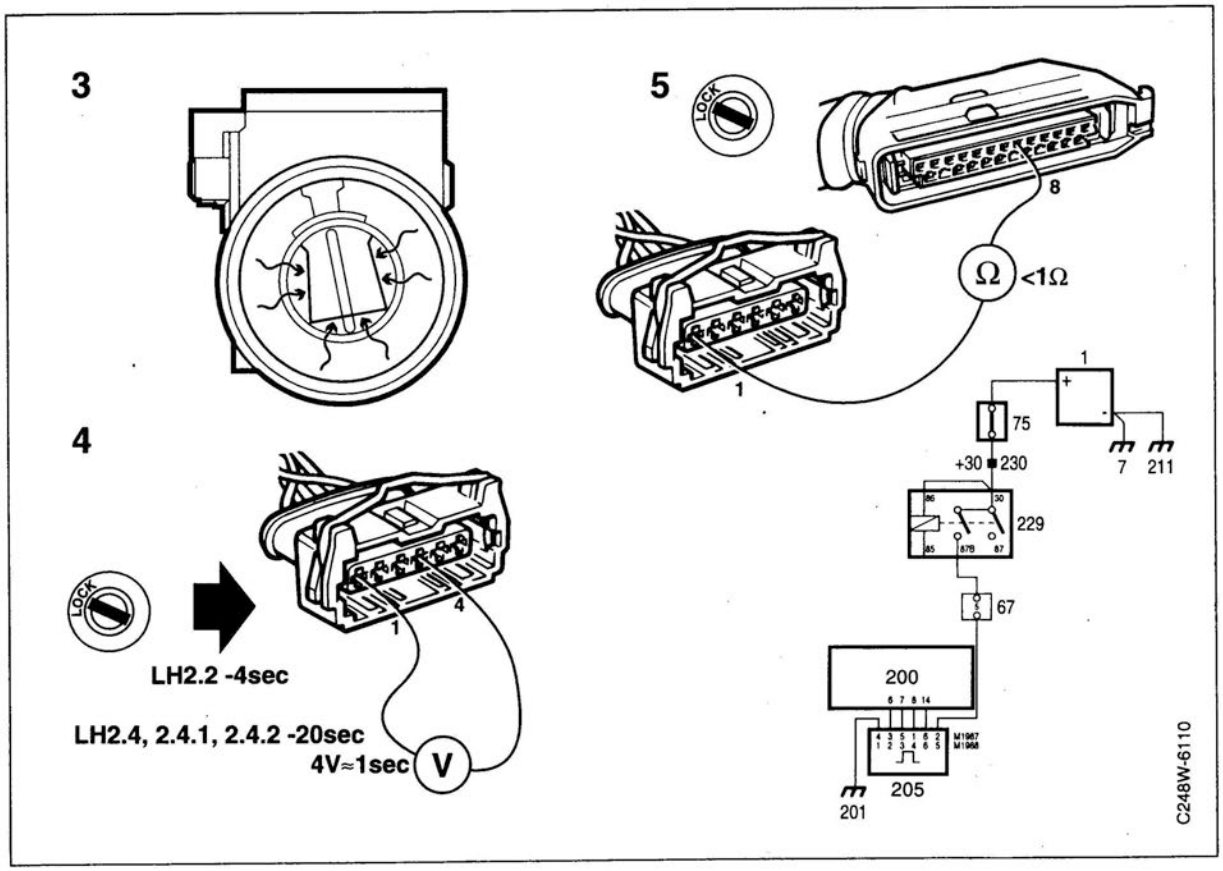

Tools

- Multimeter
- Test cables 86 11 352

1 Remove the mass air flow sensor from the air cleaner. Check that the filament (hot wire) is OK.

2 Start the engine and warm it up to at least 65°C (150°F). Run it at idling speed. Rev up the engine to 2,500 rpm, release the accelerator and let the engine run at idling speed again.

3 Switch off the ignition and observe the filament. After about 20 seconds (4 seconds for LH 2.2) it should glow brightly for about one second.

4 If burn-off is not obtained, unplug the mass air flow sensor connector. Connect the multimeter's test prods to pins 1 and 4 of the connector. Start the engine and warm it up as in point 2. Switch off the engine and observe the multimeter. After about 20 seconds (4 seconds for LH 2.2) it should give a reading of about 4 V for about 1 second.

Important

In the event of filament breakage, the control module automatically goes into "Limp Home" mode. The CHECK ENGINE lamp (MIL) lights up.

5 If all is correct, change the mass air flow sensor. If it is not, check the mass air flow sensor's wiring and connections.

6 If the wiring is OK, try fitting another control module.

7 Start the engine and check as described above. If a voltage reading is now obtained but burn-off does not occur, change the mass air flow sensor.

Checking control module signals to injectors

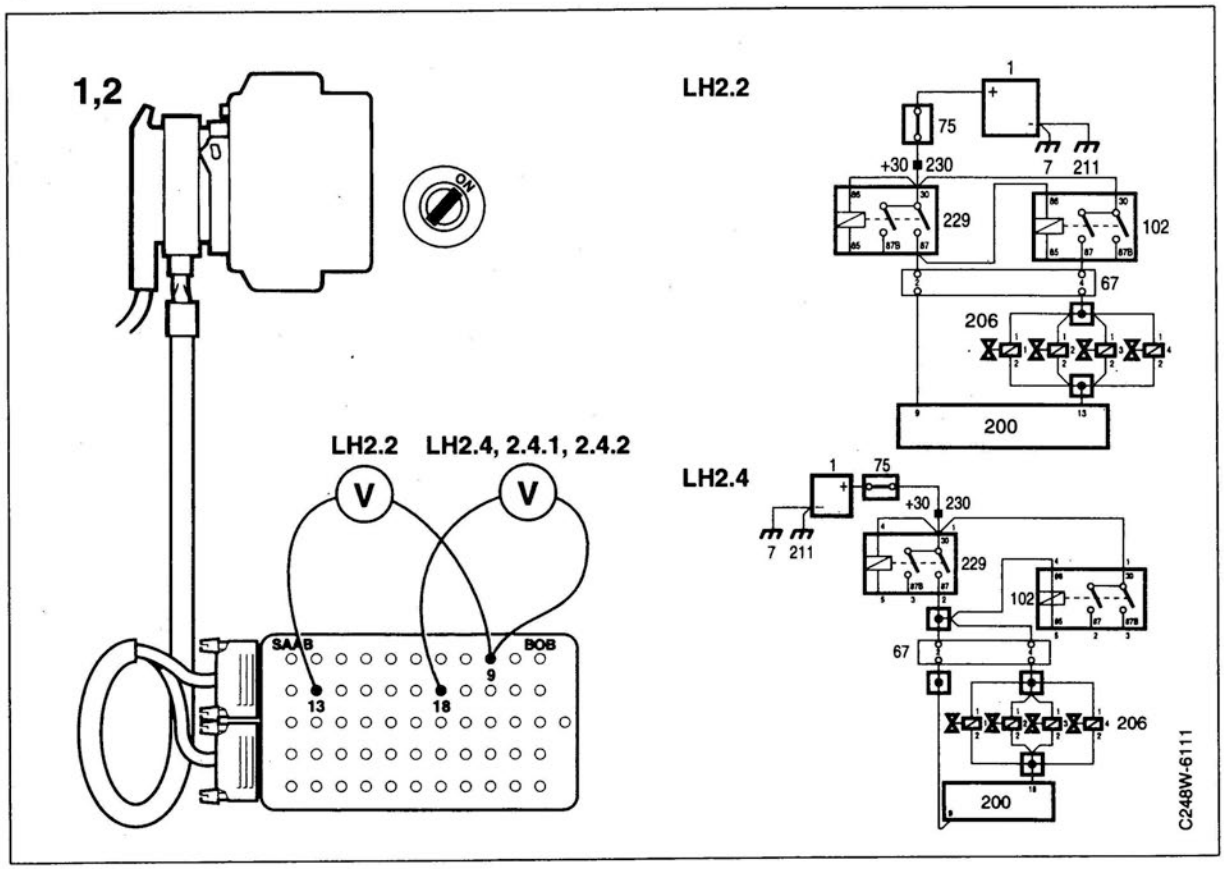

Tools:

- Screwdriver or stethoscope
- Multimeter
- Breakout box 86 11 006

1 Connect the Breakout Box to the LH control module.

2 Start the engine and take voltage readings as in the table below.
LH 2.2
across pin 9 (positive) and pin 13 (negative)
LH 2.4, 2.4.1, 2.4.2
across pin 9 (positive) and pin 18 (negative)

Engine temperature	Voltage
0°C (32°F)	1 V
20°C (68°F)	0.6 V
80°C (176°F)	0.3 V

The above figures are only approximate.

Checking control module signals to injectors (contd.)

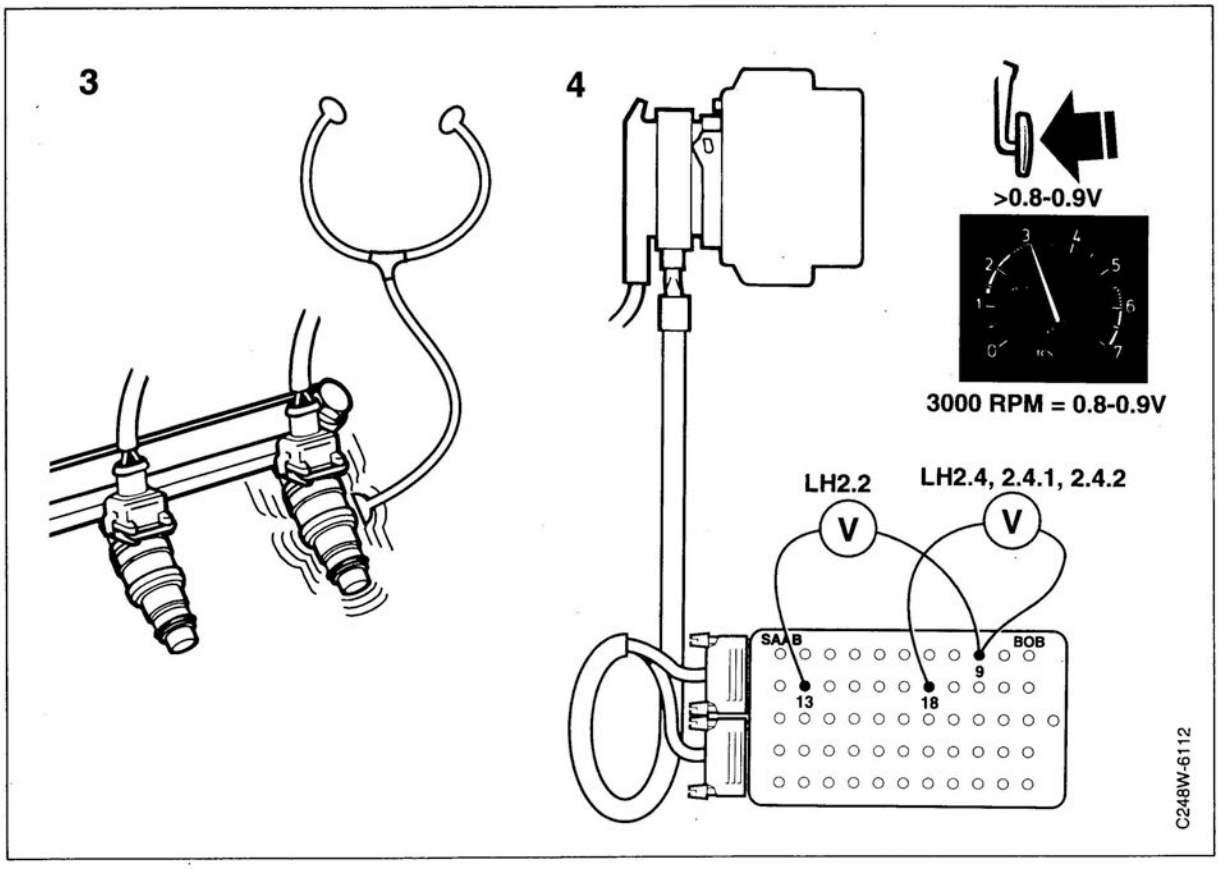

3 During the warm-up period, check (in the event of uneven idling) that all injectors are in proper working order. Hold a screwdriver or a stethoscope against the black metal part of the injector. A clicking sound should be heard in the injectors.
   a If a clicking sound is not heard in one or more of the injectors: see "Checking the injectors".
   b The injectors make a clicking sound but the engine still runs unevenly at idling speed: Unplug one connector at a time from the injectors. Engine rpm should drop.
   c If engine speed does not drop, continue with a complete inspection of the following systems:
   - Fuel system
   - Induction system
   - Electrical system

4 When the engine has reached its normal working temperature, increase engine speed slowly to 3,000 rpm. Take a voltage reading across the injector. The voltage should rise to 0.8 - 0.9 V. Allow the engine to drop to idling speed and then quickly accelerate it to 3,000 rpm. The voltage should now rise temporarily above 0.8 - 0.9 V and then drop back to 0.8 - 0.9 V.

Fuel shut-off on starting

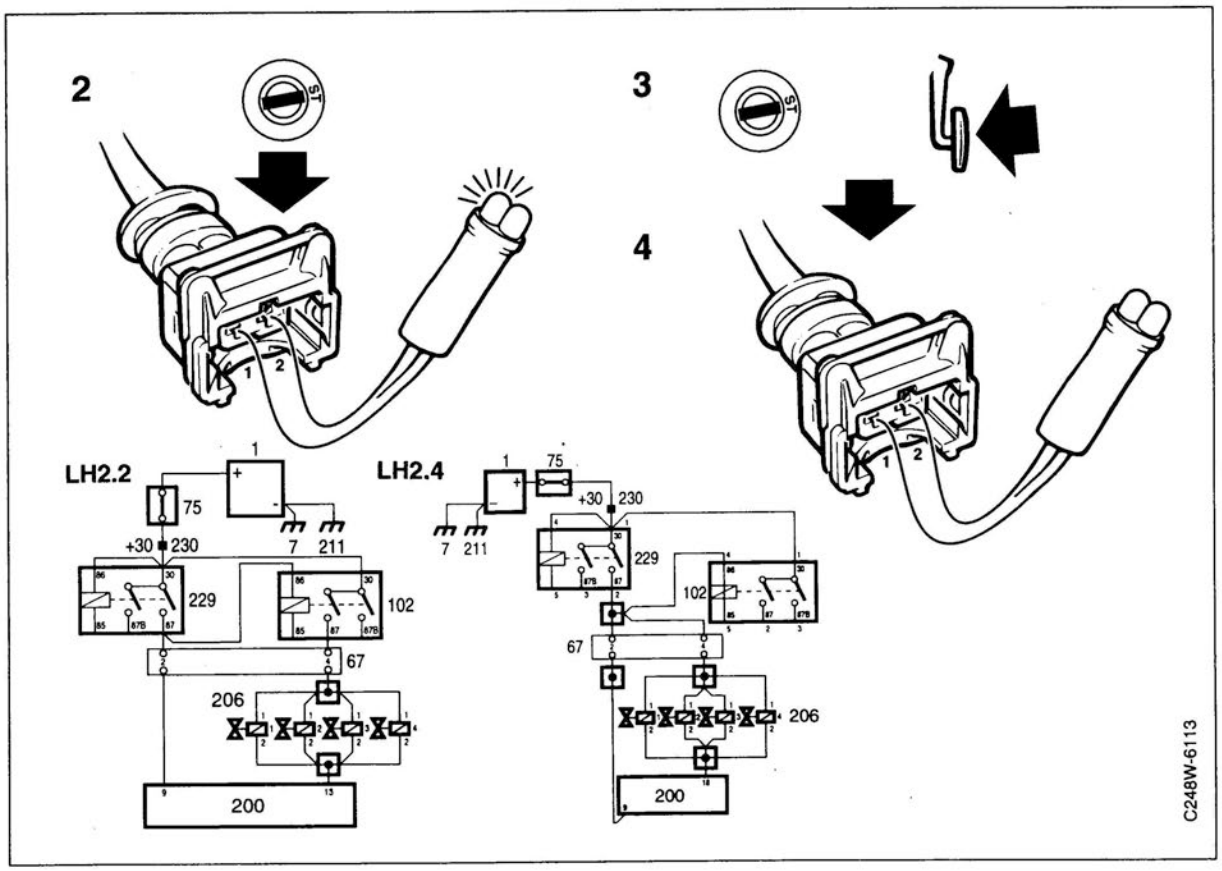

Tools:

- Test lamp 86 11 857

During starter motor cranking the supply of fuel will be shut off if the accelerator is depressed to the wide open throttle position (throttle position 72°).

1 Connect test lamp 86 11 857 to the connector of one of the injectors.

2 Run the starter motor and check that the test lamp flashes.

3 Depress the accelerator.

4 The test lamp should not flash while the starter motor is cranking the engine. If it does, check the operation of the throttle position switch, see "Checking and adjusting the throttle position switch". If the position switch is faulty, change it. Check the lead between terminal 3 of the position switch and pin 12 of the LH control module. Check the position switch's lead between pin 2 and one of the engine grounding points.

Checking full-load enrichment (LH 2.2)

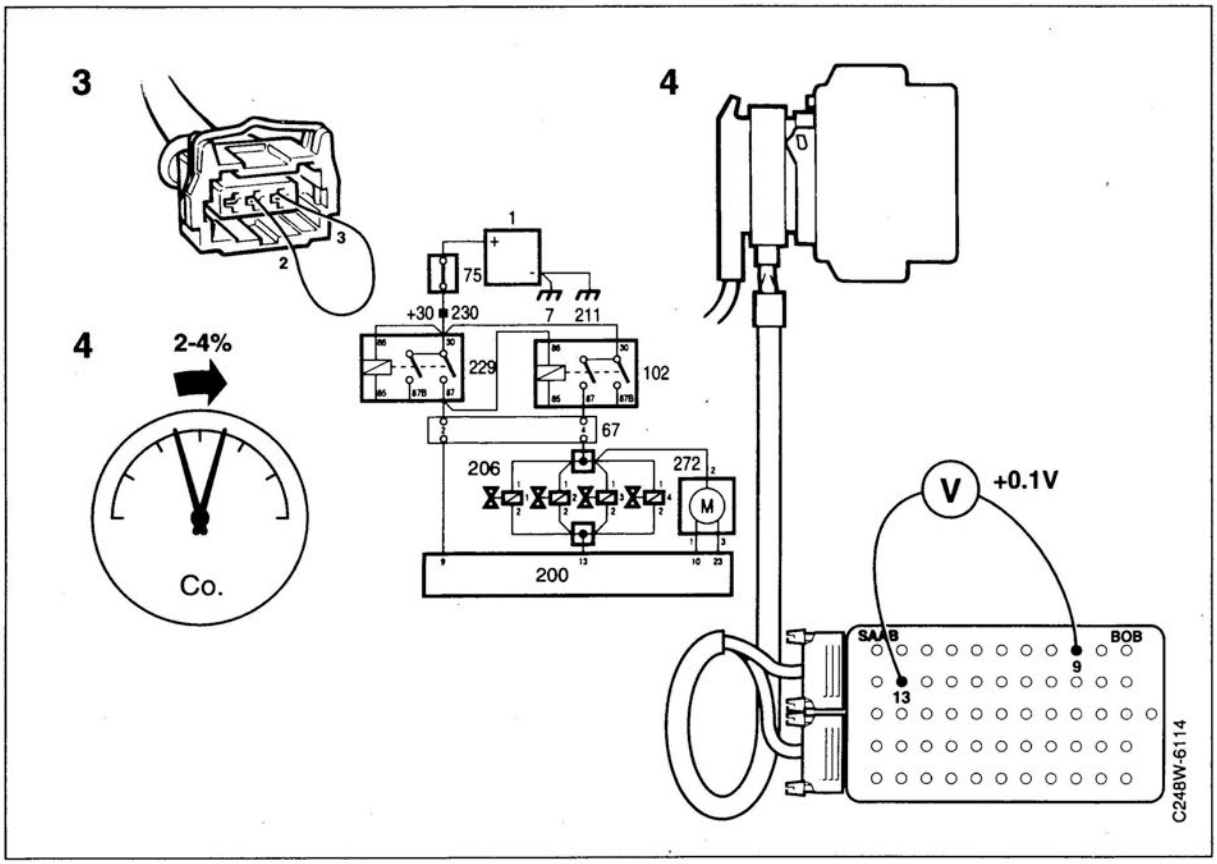

Tools:

- CO meter
- Multimeter
- Breakout box 86 11 006

1 Connect the CO meter and exhaust extraction equipment.

2 Start the engine and warm it up.

3 Unplug the connector from the throttle position switch. Connect a jumper lead across pins 3 and 2 in the position switch's connector.

4 Check that the CO reading (cars without catalytic converter) rises by 2-4%.
If it does not, connect Breakout Box 86 11 006 to the LH control module.
Take a reading across pins 9 (positive) and 13 (negative). Check that the voltage rises by about 0.1 V.

5 If it does not, check the leads connected to the LH control module. See "Checking and adjusting the throttle position switch". If the leads are OK, try fitting another control module.

6 Check and adjust the CO content as described in "Adjusting the CO content" in the "Adjustment/ replacement of components" chapter.

Checking the warm-up period

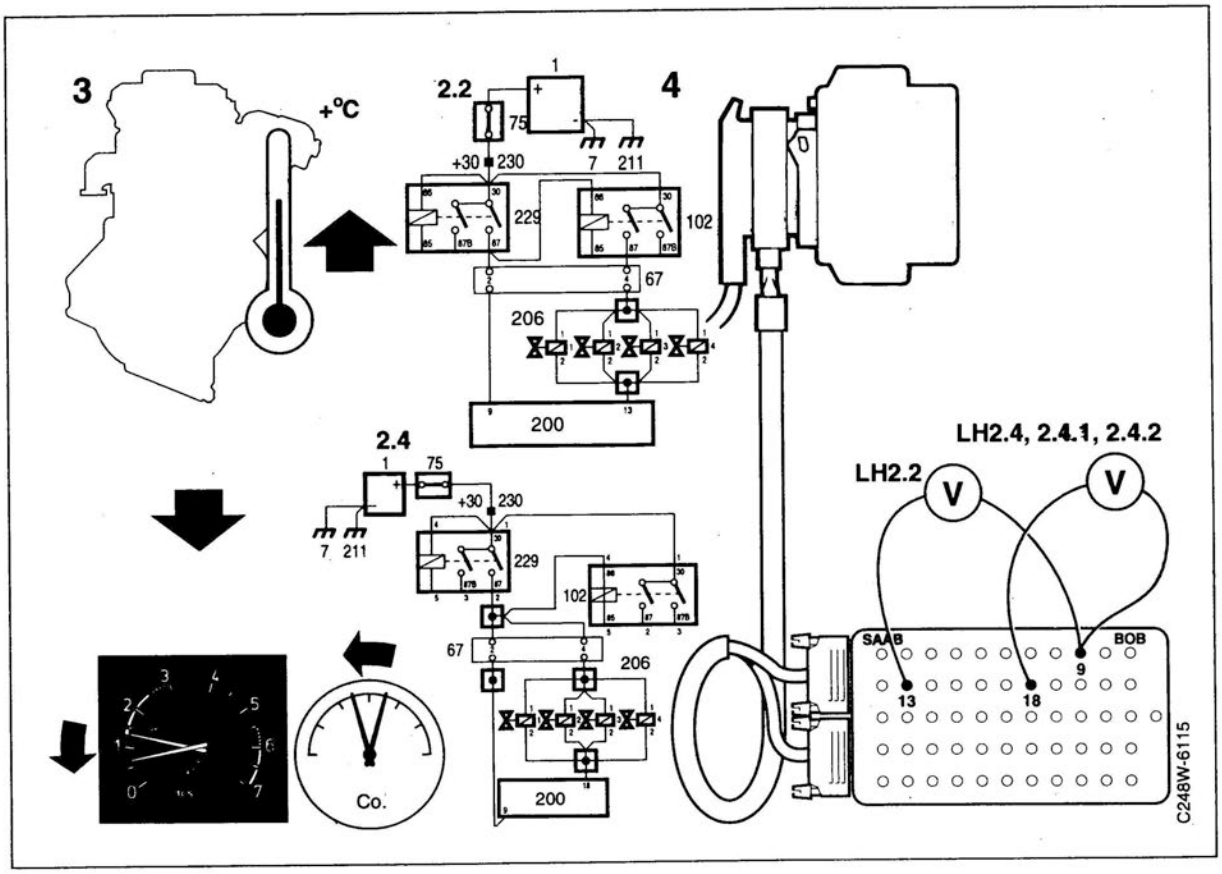

Tools:
- Multimeter
- CO meter (cars without cat.)
- Breakout box 86 11 006

1 Connect the CO meter and exhaust extraction equipment.
Connect Breakout Box 86 11 006 to the LH control module.

2 Start the engine.

3 Check engine speed during the warm-up period. Engine speed and the CO content (cars without cat.) should decrease as engine temperature increases.

4 Take voltage readings as in the table.
LH 2.2
across pin 9 (positive) and pin 13 (negative)
LH 2.4, 2.4.1, 2.4.2
across pin 9 (positive) and pin 18 (negative)

Engine temperature	Voltage
0°C (32°F)	1 V
20°C (68°F)	0.6 V
80°C (176°F)	0.3 V

The above figures are only approximate.
If the readings are not OK, check the CO setting, see "Checking and adjusting the CO content" or "Checking the temperature sensor" or "Checking the operation of filament (hot wire) burn-off".
If these are OK, try fitting another control module.

5 Check and if necessary adjust the CO content as described in "Adjusting the CO content" in the "Adjustment/replacement of components" chapter.

Checking idling speed increase on engagement of A/C compressor (cars with auxiliary air valve)

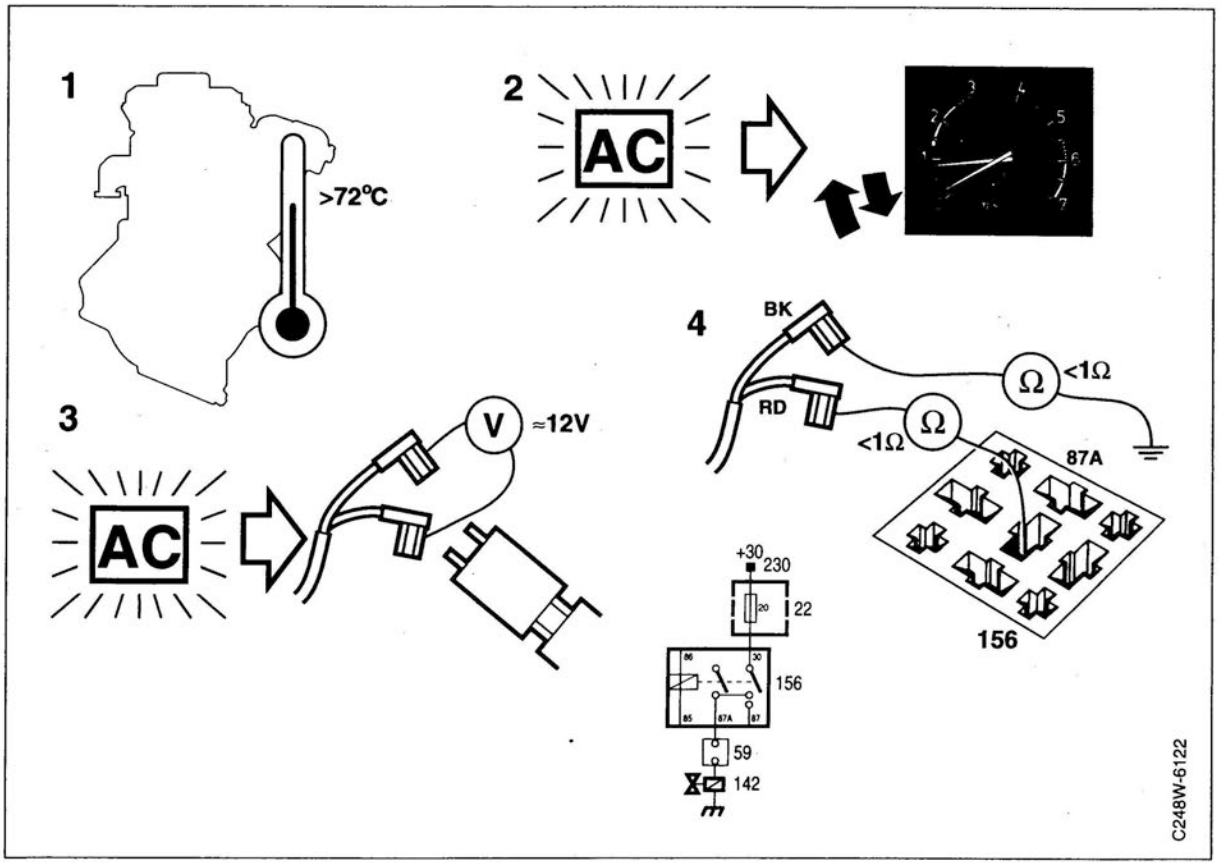

Tools:

- Multimeter
- Tachometer

1 Connect the tachometer and exhaust extraction equipment. Start the engine and warm it up.

2 Start the A/C system and check engine rpm. Engine speed should first drop noticeably and then return to normal idling speed.

3 If this does not happen, check that voltage is supplied to the idling speed increase (solenoid) valve. Take a reading across the red and black leads connected to the valve. If voltage is present, try fitting a new solenoid valve.

4 If voltage is not present, check the red lead from the main fuse box (A/C relay) to the solenoid valve via the connector in the engine bay. Also check the solenoid valve's ground lead (black).

Checking change in idling speed on engagement of A/C compressor (cars with idle air control valve), not ETS

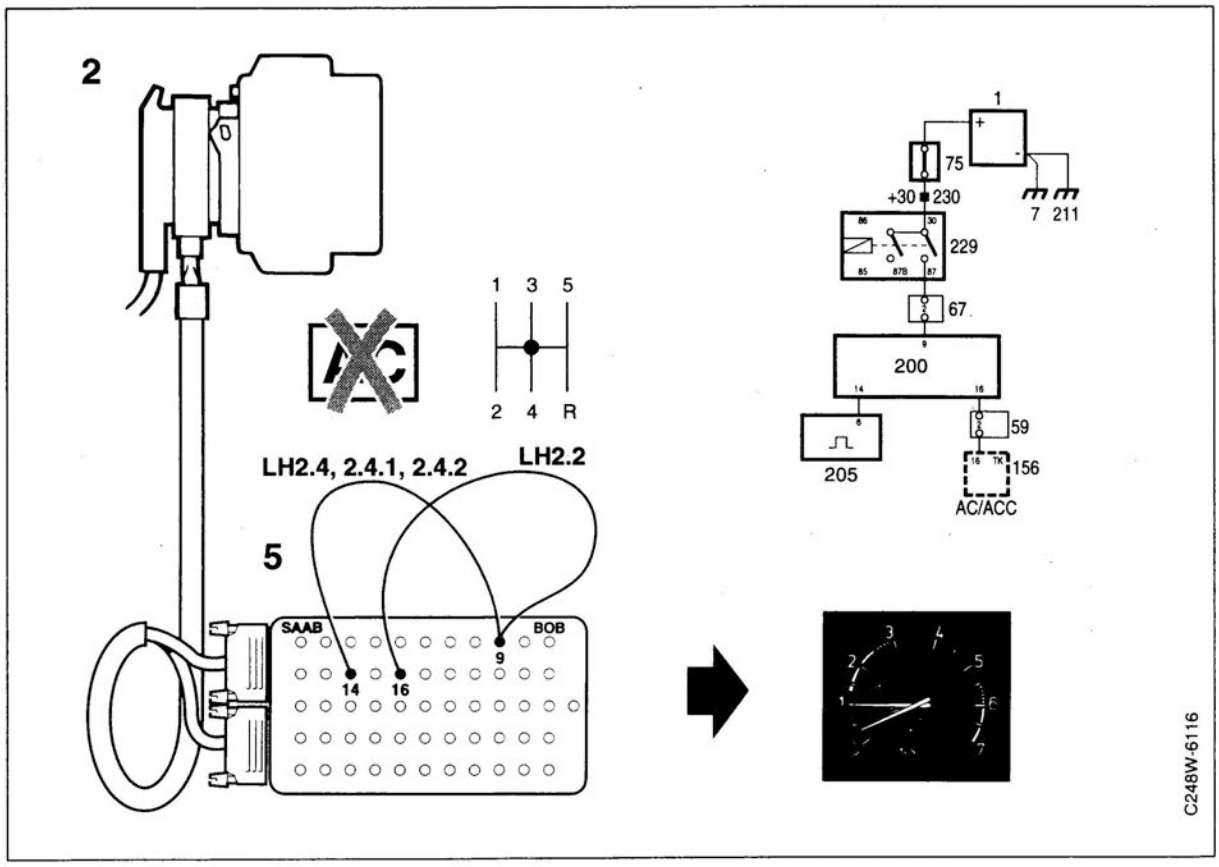

Fault symptoms

Engine speed drops on engagement of A/C.

Tools:

- Breakout Box 86 11 006

Before this check is performed, checking of the idle air control valve must have been carried out, see "Checking the idle air control valve".

1 Connect Breakout Box 86 11 006 to the LH control module.

2 Make sure that the gear lever/selector lever is in neutral and that the A/C or ACC is OFF.

3 Unplug the connector from the A/C compressor.

4 Start the engine.

5 Connect a jumper lead across:
LH 2.2
pins 9 and 16
LH 2.4, 2.4.1, 2.4.2
pins 9 and 14 (not ETS).

6 Check the engine speed.
If engine speed does not increase:
Try fitting a new LH control module.
If engine speed increases:
- Check that voltage is present on pin 30 of the A/C relay holder. Check that there is no open circuit in the wiring between pin 16 of the relay holder and pin 16 (LH 2.2) of the LH control module/pin 14 of the relay holder and pin 14 (LH 2.4, 2.4.1, 2.4.2) of the LH control module.
- If voltage is present on pin 30 and there is no open circuit in the wiring to the LH control module, check the operation of the A/C relay.
- If the relay is in proper working order, try fitting a new LH control module.

Checking the auxiliary air valve, M1985

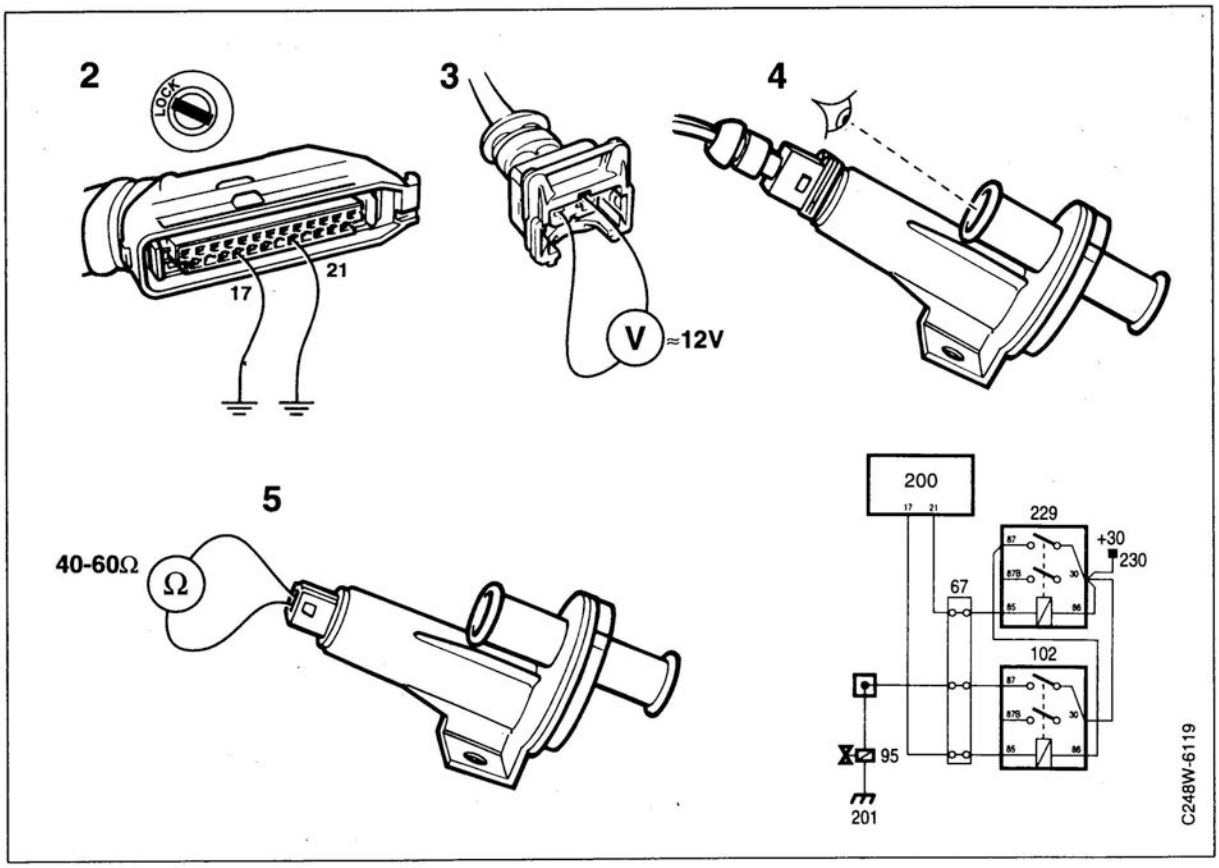

Tools:

- Multimeter

Before checking the auxiliary air valve, unplug the connectors from the LH control module and mass air flow sensor.

1 Unplug the connector from the auxiliary air valve.

2 Ground pins 21 and 17 of the control module connector.

3 Check that voltage is present across the pins in the auxiliary air valve connector.
If it is not, check the operation of the main relay and fuel pump relay, see "Checking the main relay" and "Checking the fuel pump relay".
Also check the grey and black leads connected to the auxiliary air valve.

4 Disconnect the rubber hoses and plug the connector into the auxiliary air valve. Check that the valve is open. It should close fully after about five minutes (depending on engine temperature).

5 If the valve does not close, use a multimeter to check the resistance across its pins. The resistance should be 40 - 60 ohms.
If this reading is not obtained, change the auxiliary air valve.

Checking the idle air control valve

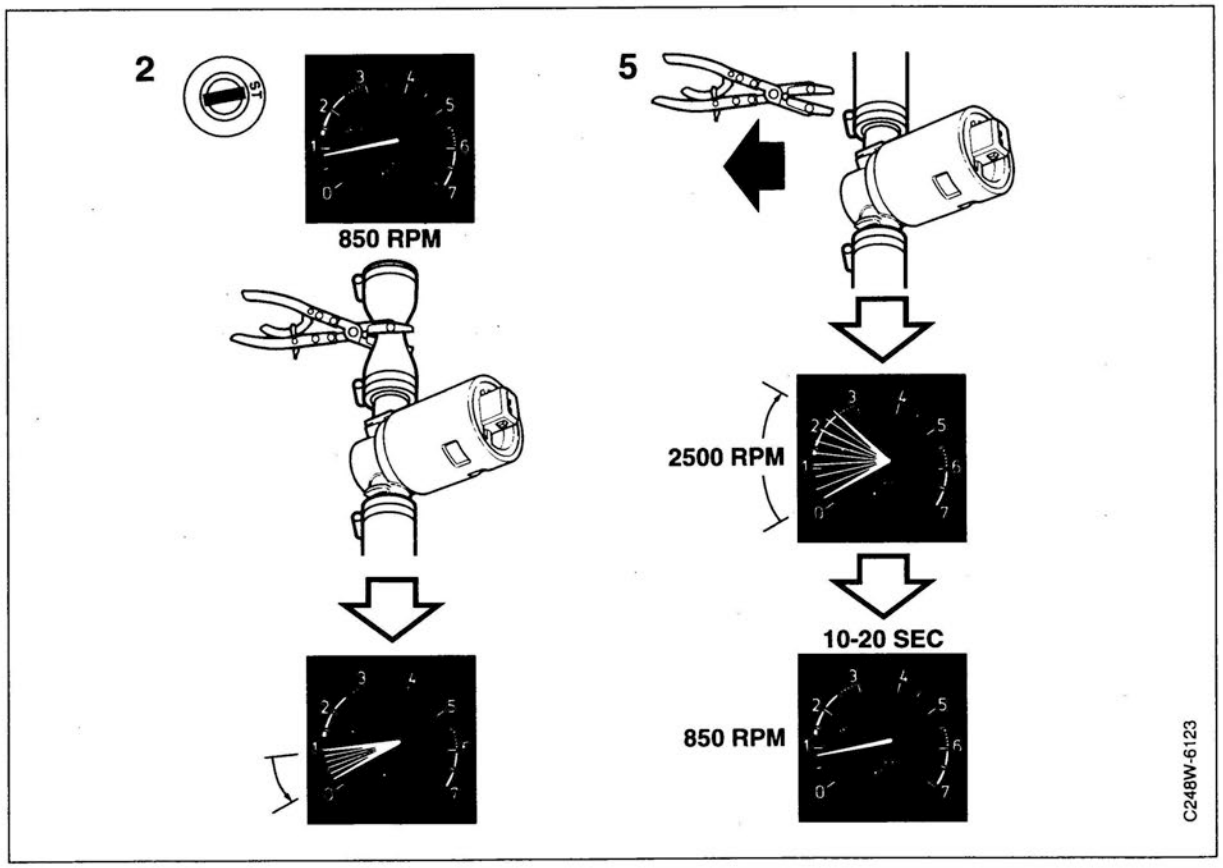

Idling speed drops appreciably when the engine load is increased suddenly in connection with the engagement of a high current-consuming item of equipment, such as the A/C, ACC, power steering, electrically heated rear window or the automatic transmission when a gear is selected.

Tools:

- Pliers
- ISAT scan tool

1 Checking for air leakage.
Start the engine and warm it up. Then run it at idling speed.

2 Restrict the flow of air through the idle air control valve by pinching the air hose with a pair of pliers. Idling speed should drop substantially. Do not pinch the hose so hard that the engine stalls.

3 If engine speed drops, continue with point 5.

4 If engine speed does not drop, continue fault diagnosis by checking:
- Incorrectly adjusted throttle
- Air leakage (after the throttle), e.g. leaky purge valve on the emission canister.

5 Check the idle speed control function.
Remove the air flow restriction. Idling speed should increase appreciably and then stabilize after 10 - 20 seconds at the normal idling speed of 850 rpm (engine warmed up).

6 If operation of idling speed control is OK, continue with point 18.

7 If it is not OK, continue with point 8 or 11, depending on which LH system the car has.

Checking the idle air control valve (contd.)

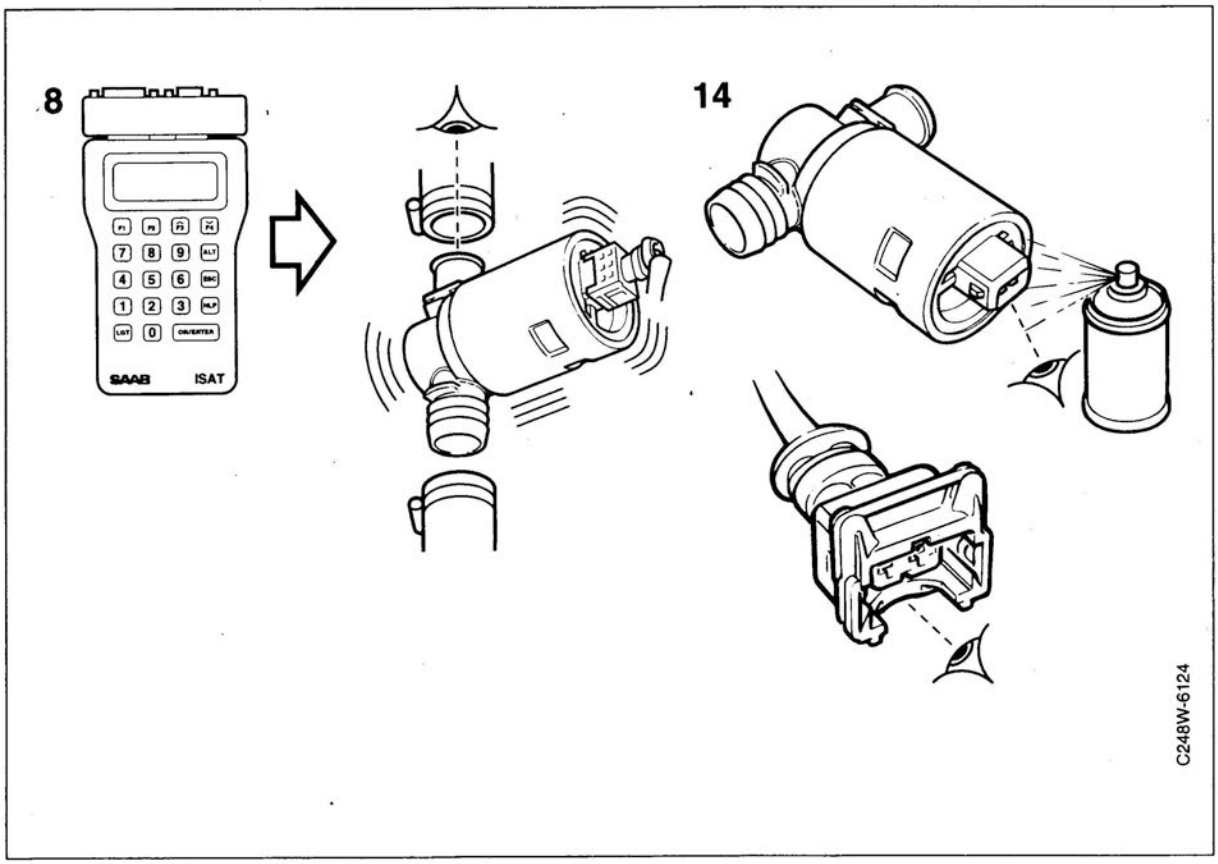

8 **LH 2.4, 2.4.1 and 2.4.2.** Checking the operation of the control valve.
Disconnect the valve's hoses.
Remove the idle air control valve.
Plug in the idle air control valve connector.
Connect the ISAT scan tool (LH 2.4, 2.4.1 and 2.4.2. M1990-).
Turn the ignition switch to the ON position.
Select command code 553 or self diagnostics 2.4, 2.4.1 or 2.4.2 M1988-.
Check visually that the valve rotates without displaying any tendency to bind.

9 If the control valve is OK, continue with point 14.

10 If the control valve binds or jams, change the idle air control valve.

11 **LH 2.2** Check that battery voltage is present on pin 2 and that the voltage varies on pins 1 and 3.

12 If the voltage is OK, change the idle air control valve.

13 If the voltage is not OK, check the wiring connected to the LH control module.

14 Check the idle air control valve contacts and connector.
Inspect the valve's contacts and connector visually. If necessary, clean and lubricate the contacts/connector with KONTAKT 61, part No. 30 04 520.

15 Check whether engine speed still drops.

16 If it does, continue with point 18.

17 If it does not, continue with point 22.

Checking the idle air control valve (contd.)

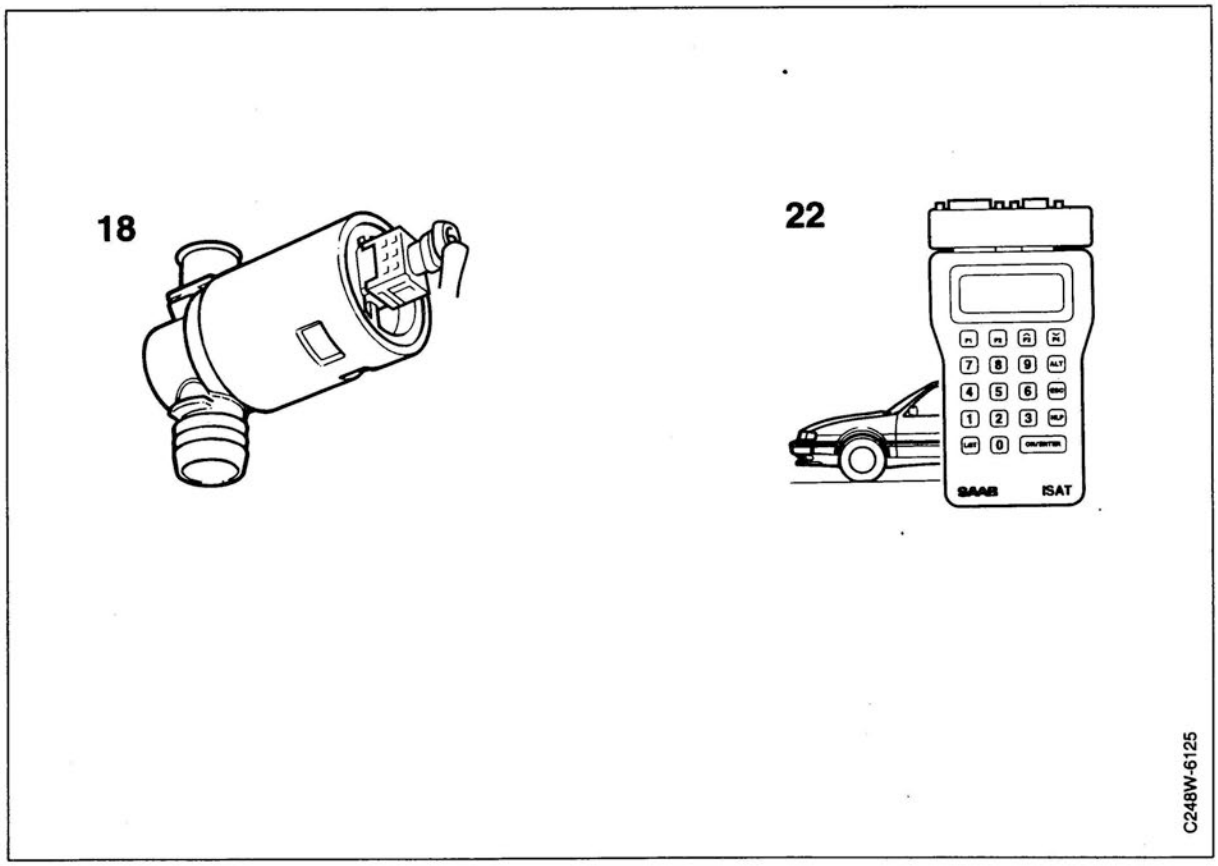

18 Checking engine load.
Check that the LH control module input is of the correct level to compensate for possible load changes.
Depending on the type of problem, continue fault diagnosis with:
- Fault diagnosis, DRIVE. ISAT scan tool code 45723/25723
- Fault diagnosis as in "Checking change in idling speed on engagement of A/C compressor (cars with idle air control valve), not ETS".
- Fault diagnosis, other problems. Continue with the following points:

19 Try fitting a replacement idle air control valve. Check whether the engine works.

20 If engine speed still drops, continue with point 22.

21 If it does not, change the idle air control valve.

22 Final check.
Test drive the car and check whether the fault symptoms persist.

23 If the fault symptoms persist, change the LH control module.

24 If the fault symptoms are no longer present, it indicates that the remedial measure taken was correct or that the fault is of intermittent type.

Checking the EVAP canister purge valve

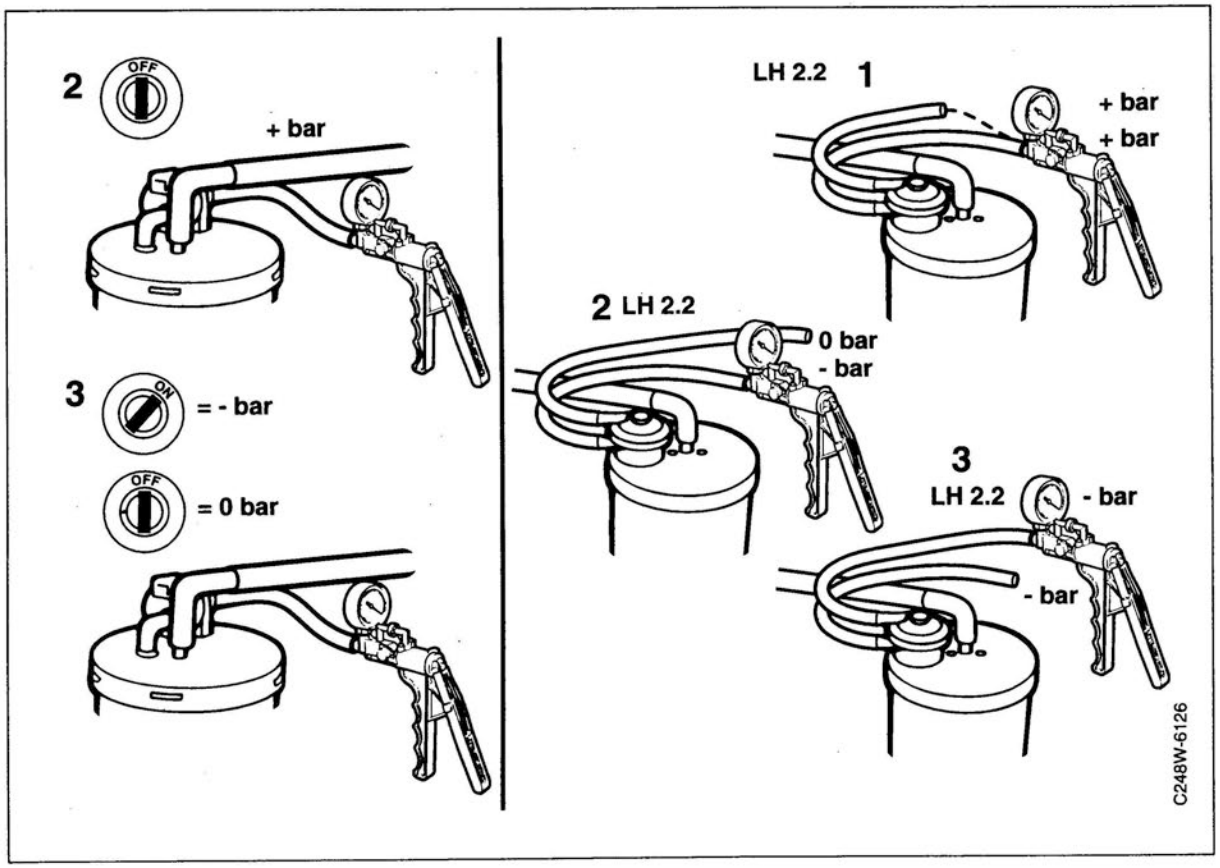

Tool:
- Pressure/vacuum pump 30 14 883

LH 2.4, 2.4.1, 2.4.2

1 Disconnect the hose from the purge valve at the intake manifold. Connect pressure/vacuum pump 30 14 883.
2 Pump up the pressure. The non-return valve for the turbo pressure should seal.
3 Build up negative pressure. The purge valve should be:
   Open with ignition switched off
   Closed with ignition switched on
4 If it is not, check the hose. If it is OK, change the purge valve.

LH 2.2

1 Disconnect both hoses from the purge valve at the intake manifold.
   Pump up pressure in both hoses simultaneously. The valve should be airtight.
2 Build up negative pressure in the thick hose. The valve should be airtight.
3 Build up negative pressure in the thin hose. The valve should now be open to vacuum in the intake manifold (through the thick hose).
4 If it is not, inspect the hoses. If they are OK, change the EVAP canister with purge valve.

Checking the induction system

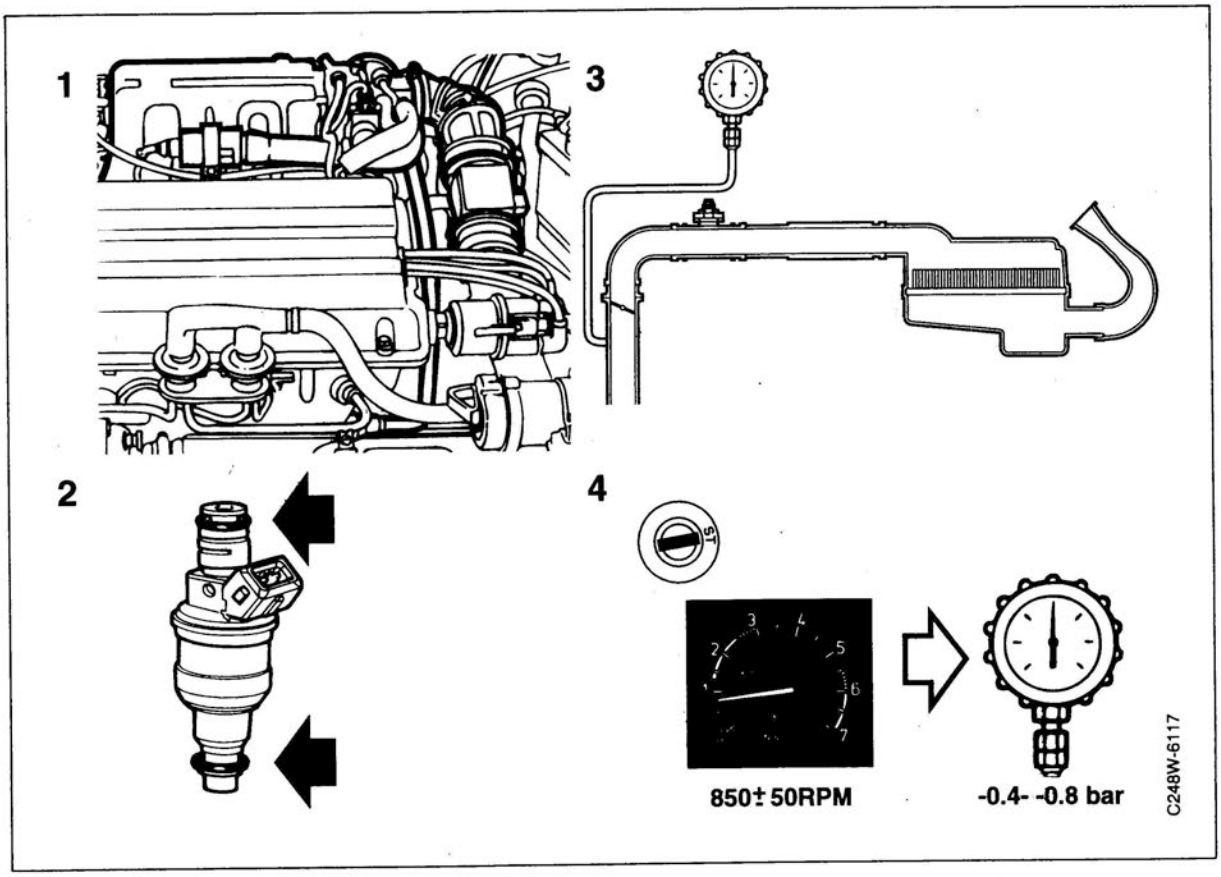

Tools:

- Pressure testing equipment No. 83 93 514
- Start gas

1 Where appropriate, check the following for leakage
   - auxiliary air valve/idle air control valve
   - brake servo
   - bleed valve
   - vacuum tank
   - pressure switch
   - EGR thermostatic valve
   - EGR valve
   - fuel pressure regulator

   Also check that:
   - the throttle closes
   - the three throttle body retaining bolts are tightened.

2 Check that the injectors are correctly fitted in the intake manifold and that the O-rings are undamaged.
   If air leakage is still suspected after carrying out these checks, continue checking as follows:

3 Connect pressure testing equipment 83 93 514 to the intake manifold after the throttle and suspend the pressure gauge vertically.

4 Start the engine. Run it at idling speed, 875 ± 50 rpm.
   Check the vacuum, which if everything is in proper working order should be 0.4 - 0.8 bar (5.8 - 11.5 psi)
   If the vacuum is less than 0.4 bar (5.8 psi), there is air leakage in the induction system. In such case, check again as described above.

5 Also check the induction system for air leakage, before the throttle and up to the air cleaner. For turbo engines, see "Pressure-testing the turbo system".

Useful tip

Suspected leakage may also be discovered by spraying start gas on suspected areas when the engine is running at idling speed. If leakage exists, engine speed will tend to increase.

Pressure-testing the turbo system

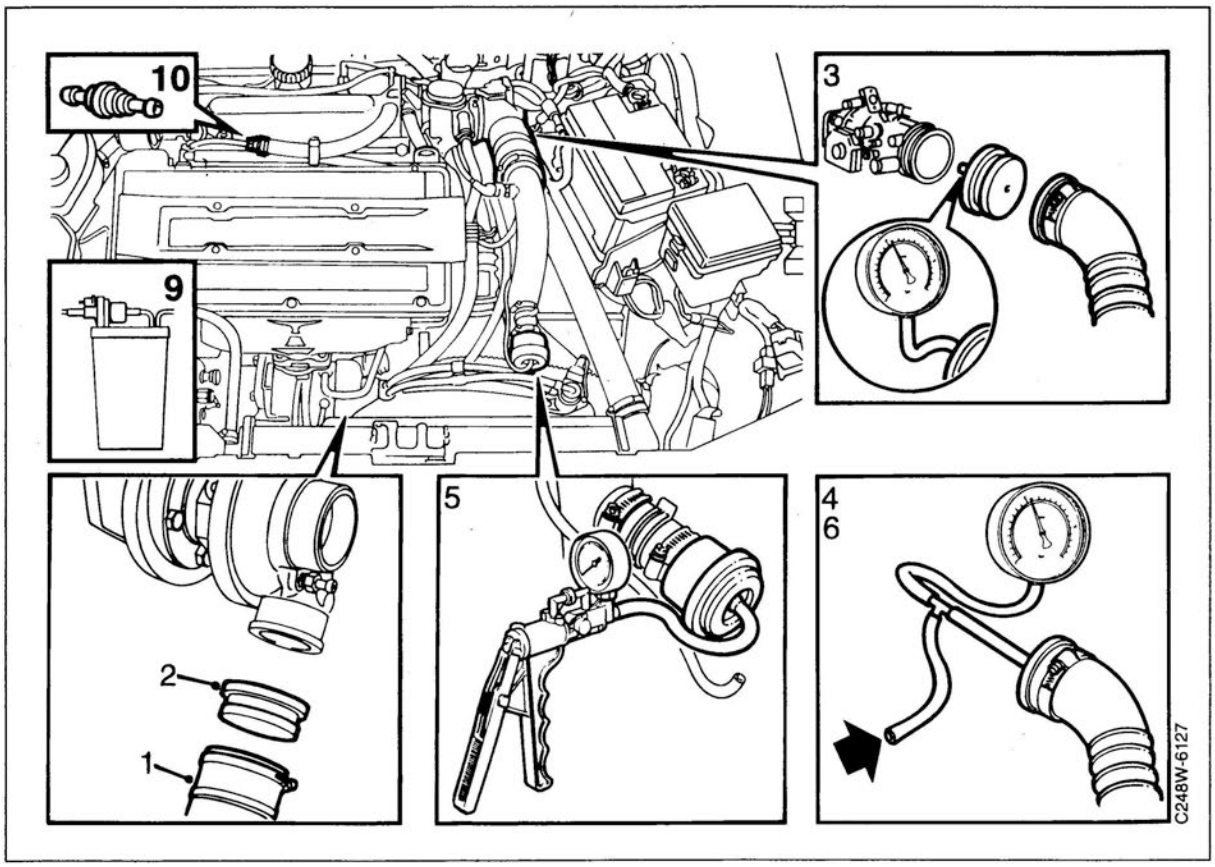

Tools:
- Pressure testing equipment 83 93 514
- Pressure/vacuum pump 30 14 883
- Plug 83 94 587
- Nipple 83 94 595

1 Disconnect the delivery pipe from the turbocharger.

2 Fit plug 83 94 587. Tighten the hose clip and lower the car.

3 Detach the turbo delivery pipe from the throttle body. Fit the plug with nipple 83 94 595. Tighten the hose clip.

4 Connect pressure testing equipment 83 93 514 to the nipple.

5 Connect pressure/vacuum pump 30 14 883 to the charge air bypass valve's vacuum hose and pump up a pressure of about 0.5 bar.

Important

Exercise caution when pressurizing the turbo system. Excessively high pressure could damage hoses and fittings.

6 Connect a compressed-air gun to the pressure testing equipment and carefully build up a pressure of about 1 bar.

7 Check that the pressure does not drop by more than 0.1 bar in 30 seconds. If it drops by more than this or if a hissing sound can be heard, check the hoses, pipes and fittings for leakage.

8 Remove the equipment and reconnect all pipes and hoses.

9 Check the purge valve's non-return valve, see "Checking the EVAP canister purge valve".

10 Check the non-return valve in the thin crankcase ventilation hose. It should seal against pressure from the intake manifold.

Checking the bypass valve

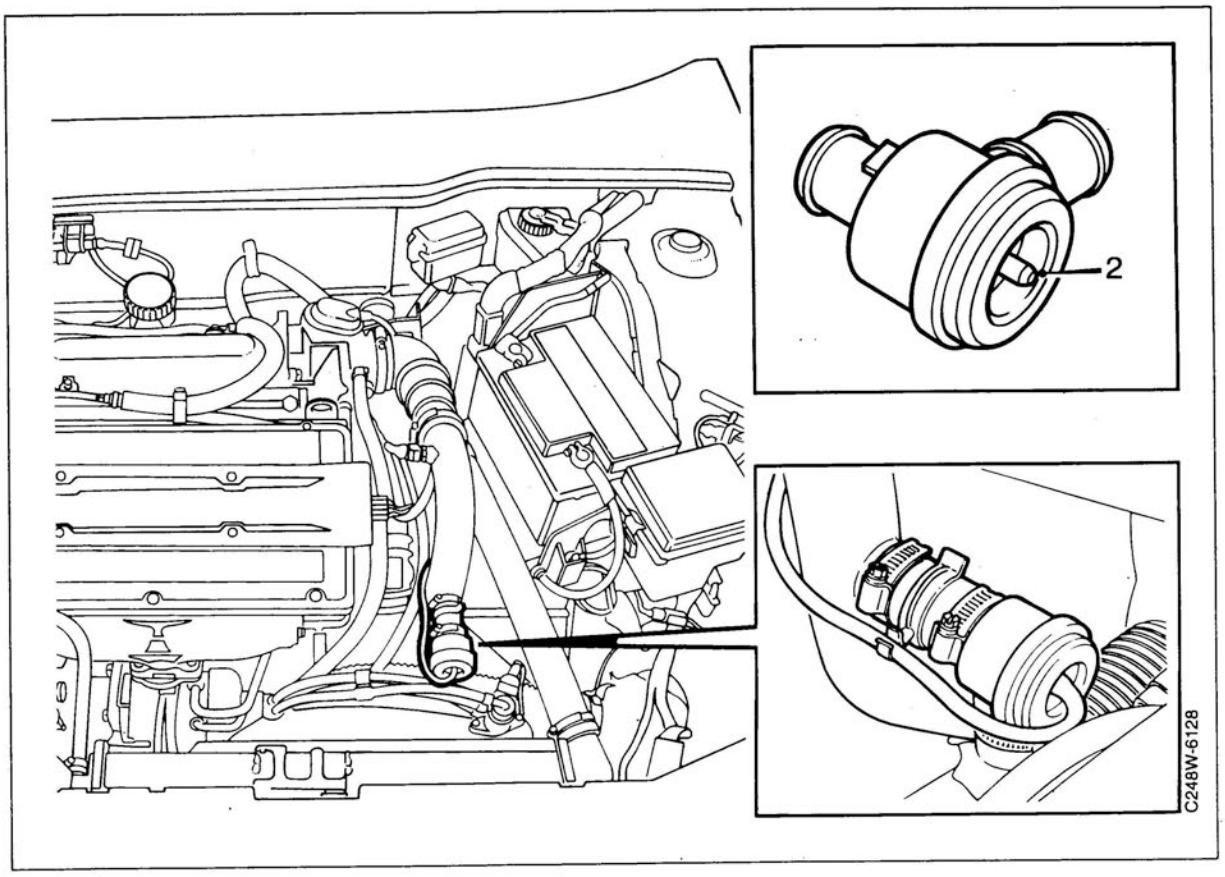

Tool:
- Pressure/vacuum pump 30 14 883

1 Disconnect the vacuum hose from the bypass valve.
2 Connect pressure/vacuum pump 30 14 883 and build up negative pressure in the valve.
3 Check that the diaphragm is intact. If it is not, the negative pressure (vacuum) will be lost.
4 Repeat points 1 and 2, but pump up a degree of overpressure.
5 Disconnect the pump.

Checking the catalytic converter

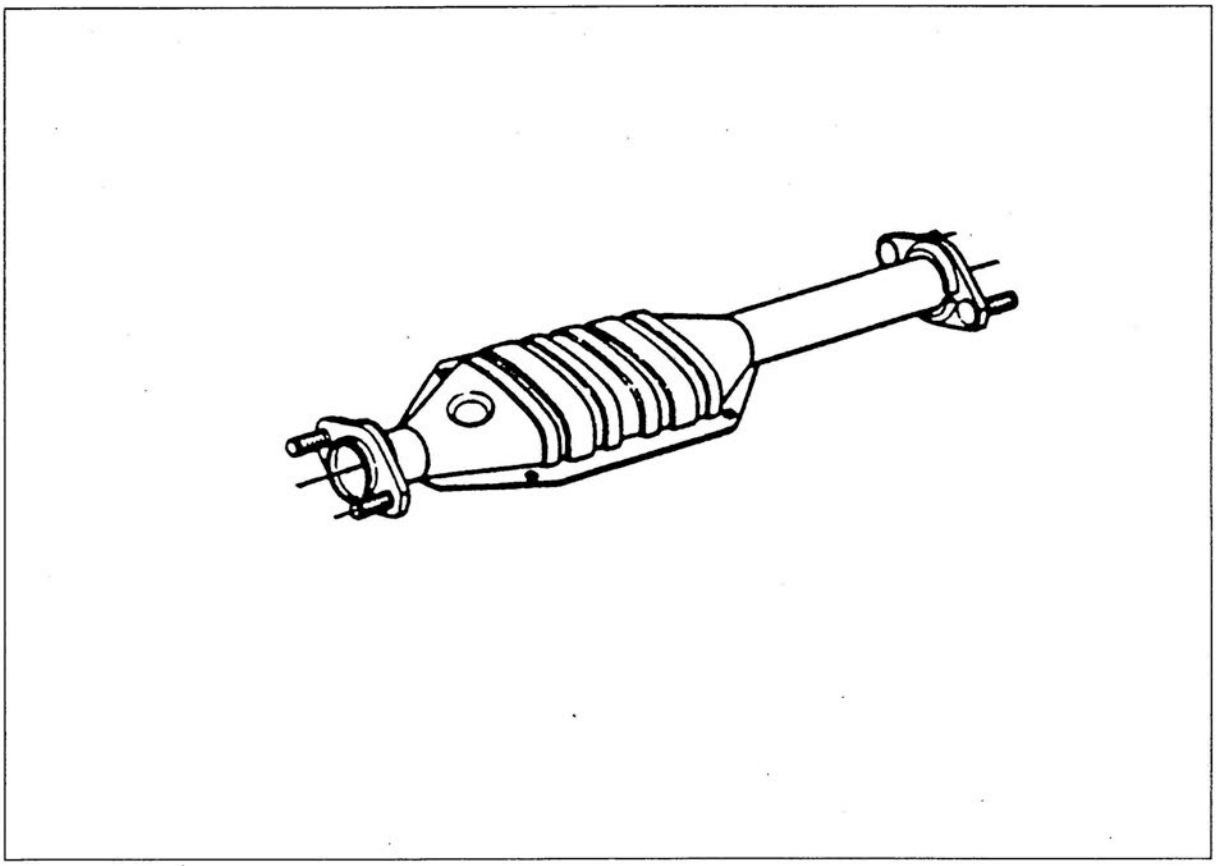

General

Conditions for checking the operation of the catalytic converter are that the closed loop is in proper working order and that readings are taken before the catalytic converter has reached working temperature.

The catalytic converter should reduce the CO content from between 0.5% and 1.0% to less than 0.20%.

During the warm-up phase the catalytic converter's reaction will be accelerated if engine speed is increased to 3,000-4,000 rpm a few times.

Checking

Before checking is started, the engine should have cooled down for at least one hour.

1 Connect a CO meter.
2 Start the engine and run it at idling speed (starting enrichment).
3 Read off the CO meter after 2-5 minutes. The CO content should then have stabilized at between 0.5% and 1.0%.
4 Warm up the engine until the radiator fan cuts in.
5 Run the engine at idling speed and read off the CO content again, which should now be lower than 0.20%.

Useful tip

Fuel-diluted oil may result from running the engine for numerous short periods without it attaining normal operating temperature. This could lead to a higher CO/HC content in the exhaust. For this reason the oil should be changed if it is suspected of being diluted with fuel.

At high HC levels (low CO content) this could be caused by leaky valves and valve guide seals.

FAULT DIAGNOSIS Fault symptom Faulty component/function	Catalytic converter	Wiring harness/connector	Control module	Coolant temperature sensor	Position switch/position sensor	Mass air flow sensor	Speed signal	IAC valve	Main relay	Oxygen sensor preheating	Fuel pump relay	A/C system	Selector lever switch	EVAP canister purge valve/system	Injectors	Fuel pressure regulator	Pulsator	Fuel filter	Fuel pump/Non-return valve	Induction system	Basic engine	Cylinder head/gasket	Ignition system	Non-return valve, crankcase ventilation	EGR	Bypass valve/boost pressure	Exhaust system (leakage)
Engine refuses to start		5							4		3								2				1				
Engine starts but immediately dies		5						1								2			4	3							
Engine, long starting time				6											3	1			2	4			5				
Engine misfires, does not run on all cylinders															3				5	4		2	1				
Uneven, "hunting" idle					3		5	1						4						2							
Idling speed dips on engagement of load (A/C, etc.)					2			1					4							3							
Hesitant/snatching when driving on road, steady throttle															3					2	5		1		4		
Idling speed too fast/slow					2			1				5		4						3							
CO/HC cannot be adjusted		3		4		1								2							5						
White smoke immediately after starting																						1					
Puffs of exhaust when accelerator released or when idling																						1					2
High HC content	5														3						4	1	2				
High CO content	5			2		1				6				3		4											
Hesitant acceleration at low speed						2									3	4				5			1				
Hesitant acceleration at high speed						2										3		5		4			1				
High fuel consumption				4		1									3	5							2				
Diagnostics, no contact		1	2																								
Pulsating noise																	1										
Poor drivability						4				1										2					3	5	
Sluggish performance						1															5		3	4		2	

Suggested measures and priorities are based on experience accumulated at our garages and repair shops.

jxh

Adjustment/replacement of components

Oxygen sensor (fuel injection engine) 184
Oxygen sensor (turbo engine) 186
EVAP canister 188
EVAP canister purge valve (electrically controlled) 189
Intake manifold (B202) 190
Intake manifold, divided (B202) 192
Intake manifold, removal of upper half (B234i) 194
Intake manifold (B234i) 196
Intake manifold (B234T) 199
Injectors (B202) 201
Injectors (B234i) 203
Injectors (B234T) 205
Cleaning the injectors 207
Fuel pressure regulator (-M1987) 216
Fuel pressure regulator (M1988-) 217
Fuel pressure regulator (B234T) 218
Throttle position switch 219
Throttle position sensor 220
Throttle body (not ETS) 221
Auxiliary air valve 223
Throttle damper (dashpot) 224
Idle air control valve (B202) 225
Idle air control valve (B234i) 226
Idle air control valve (B234T) 227
Adjustment of idling speed, M1985 (without idle air control valve) 228
Adjustment of idling speed (LH 2.2 with idle air control valve) 229
Mass air flow sensor (fuel injection engine) 231
Mass air flow sensor (turbo engine) 232
Checking and adjusting the pulse ratio (LH 2.2 cat.) 233
Checking and adjusting the CO content (LH 2.2 and 2.4.2 for cars without a catalytic converter) 235
Basic throttle setting (not ETS) 236
Coolant temperature sensor 237
Relay panel 238
LH control module 239
Pressure switch (LH 2.2 turbo engine) 240
Checking and adjusting the kick-down wire 241
Conversion of car with catalytic converter for running on leaded petrol 242
Cold-starting valve 244

Oxygen sensor (fuel injection engine)

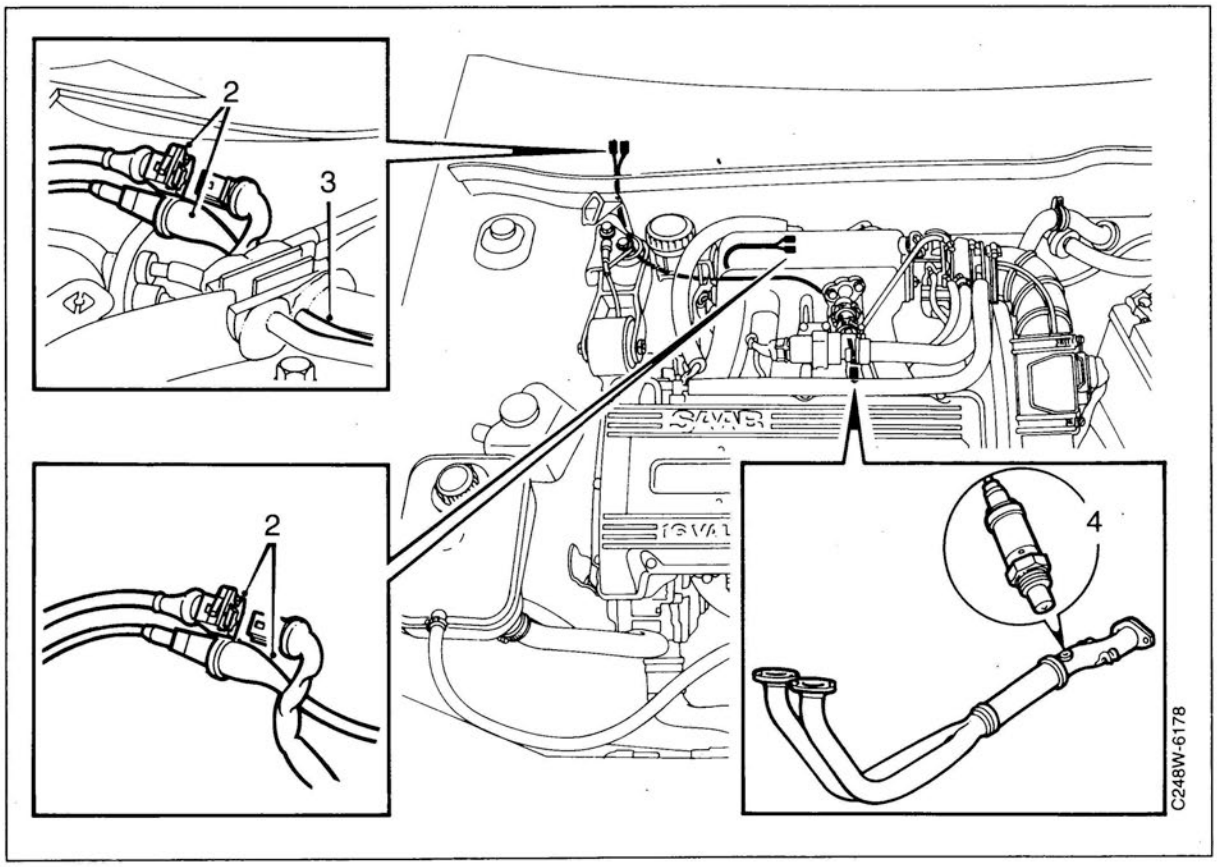

Removal

Important

The electrical connector may be located either under the cover panel over the false bulkhead space or under the intake manifold.

1 Remove the cover panel.
2 Unplug the oxygen sensor connector.
3 Withdraw the oxygen sensor's leads. To do this, it may be necessary to raise the A/C pipes slightly.
4 Remove the oxygen sensor.

Important

The leads must not be twisted. The oxygen sensor is sensitive to impacts and jolts and should therefore be handled with care.

Oxygen sensor (fuel injection engine), contd.

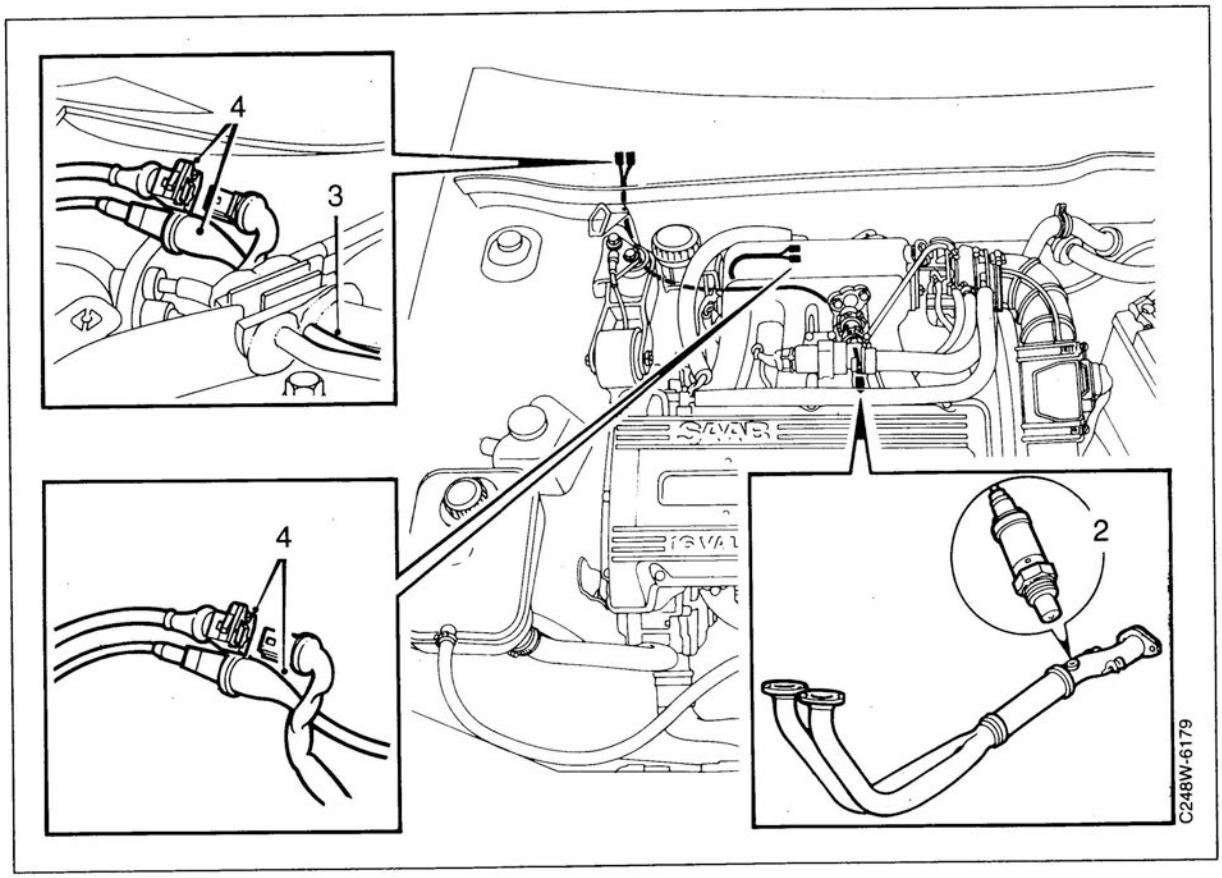

Fitting

1 Before fitting the oxygen sensor, lubricate the threads with Molycote 1000.

2 Fit the oxygen sensor.
Tightening torque: 55 Nm (41 lbf ft).

3 Introduce the oxygen sensor's leads. To do this, it may be necessary to raise the A/C pipes slightly.

4 Plug the connector into the oxygen sensor and secure the wiring.

5 Fit the cover panel in place and secure the sealing strip on the bulkhead partition.

Oxygen sensor (turbo engine)

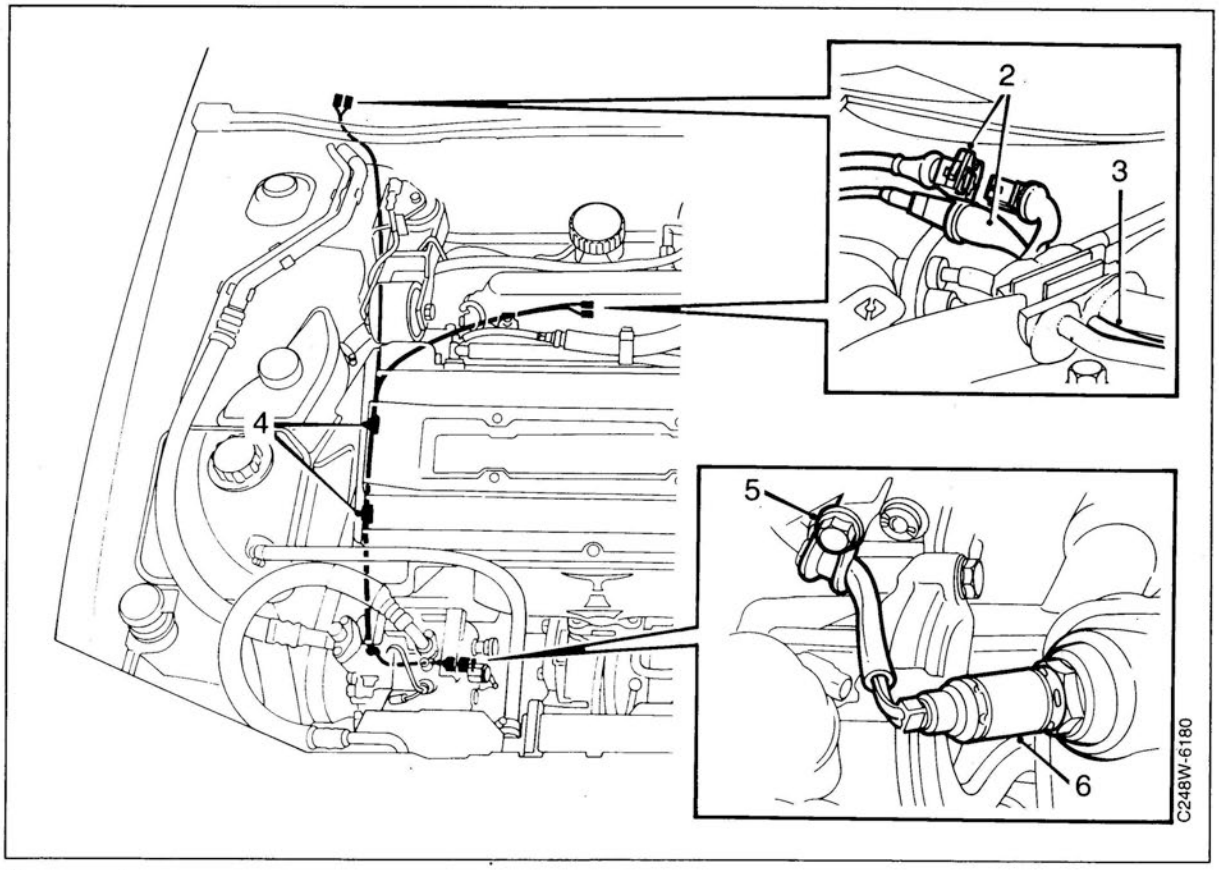

Removal

Important

The electrical connector may be located either under the cover panel over the false bulkhead space or under the intake manifold.

1 Remove the cover panel.
2 Unplug the oxygen sensor connector.
3 Withdraw the oxygen sensor's leads. To do this, it may be necessary to raise the A/C pipes slightly.
4 Remove the clamps securing the oxygen sensor's lead to the coolant pipe.
5 Remove the clamp adjacent to the A/C compressor's lower retaining bolt.
6 Remove the oxygen sensor.

Important

The leads must not be twisted. The oxygen sensor is sensitive to impacts and jolts and should therefore be handled with care.

Oxygen sensor (turbo engine), contd.

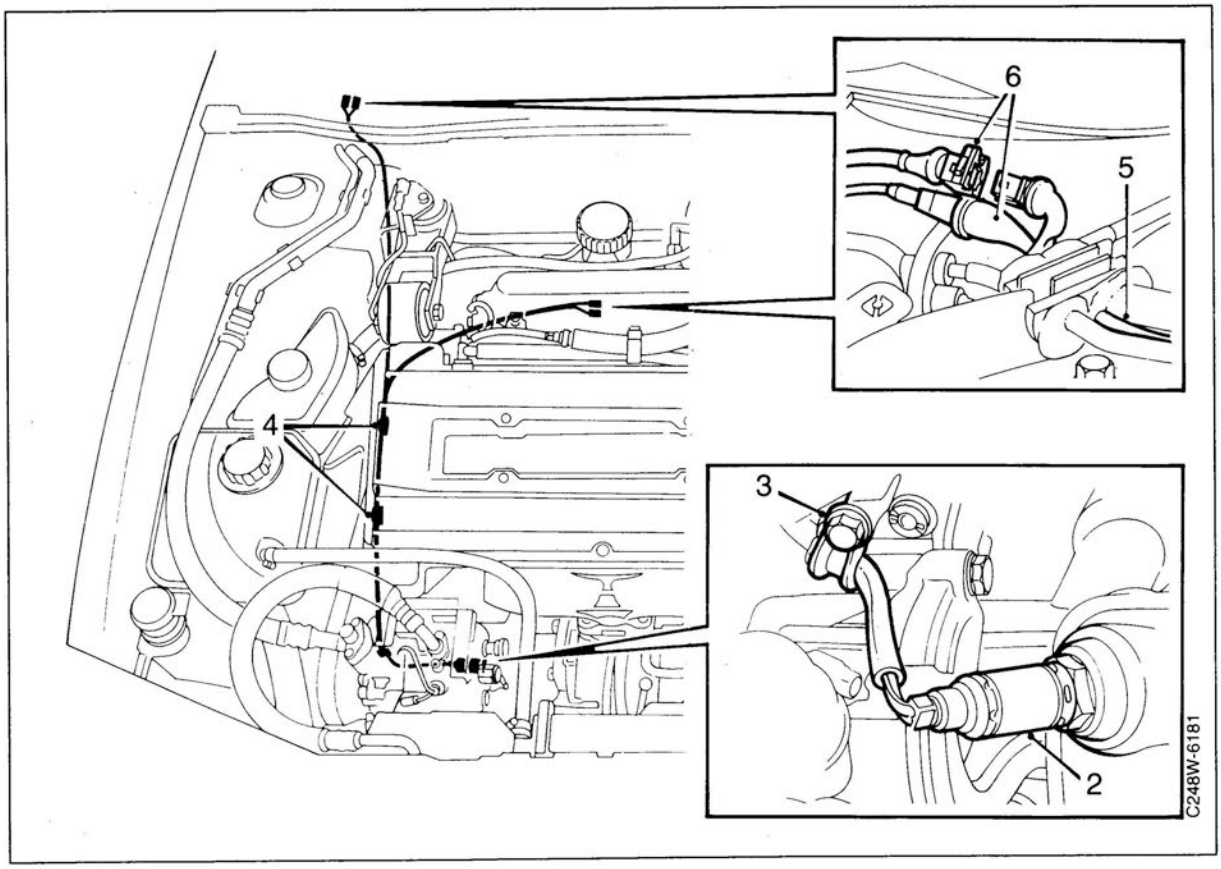

Fitting

1 Before fitting the oxygen sensor, lubricate the threads with Molycote 1000.

2 Fit the oxygen sensor.
Tightening torque: 55 Nm (41 lbf ft).

3 Fit the clamp adjacent to the A/C compressor's lower retaining bolt.

4 Press home the clamps securing the oxygen sensor's lead to the coolant pipe.

5 Introduce the oxygen sensor's leads. To do this, it may be necessary to raise the A/C pipes slightly.

6 Plug the electrical connector into the oxygen sensor and secure the wiring.

7 Fir the cover panel in place and secure the sealing strip on the bulkhead partition.

EVAP canister

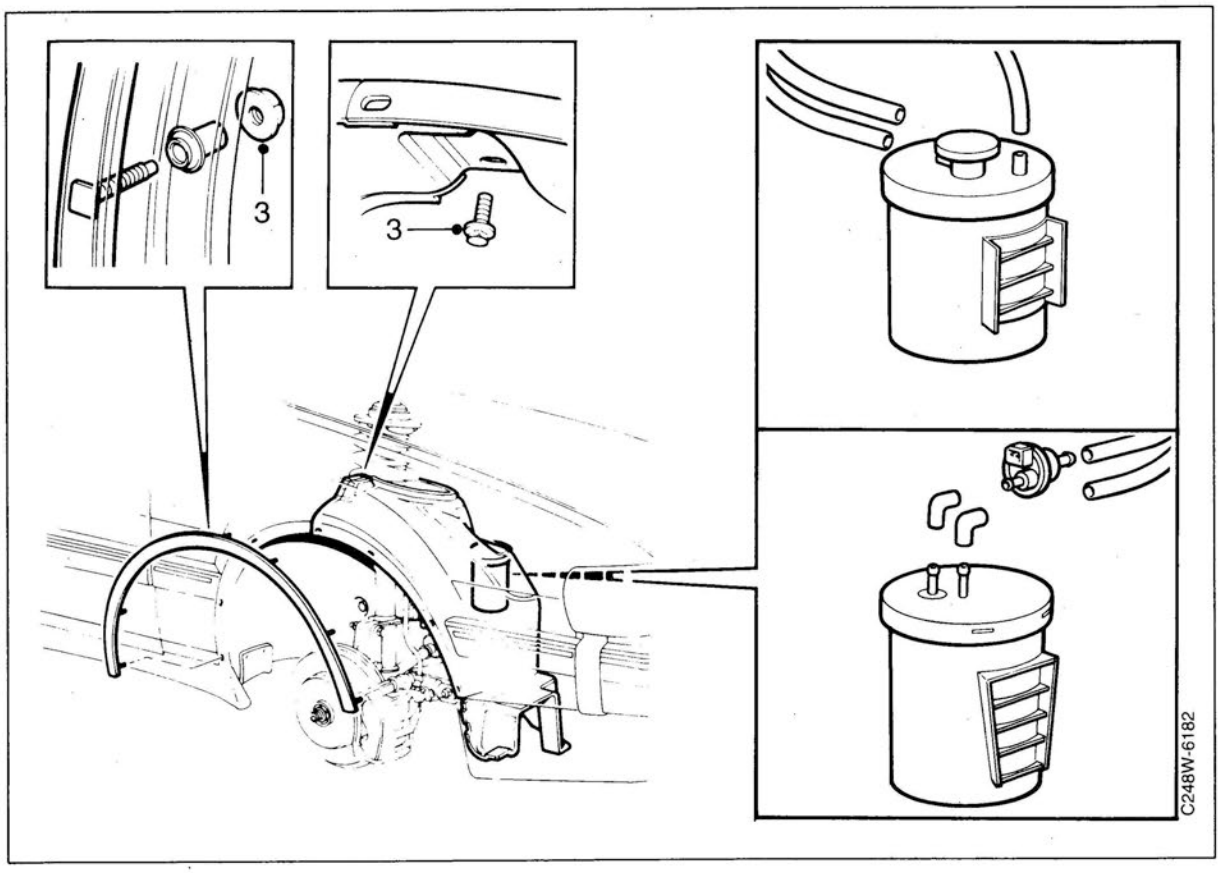

Removal

1 Raise the car.
2 Remove the right-hand front wheel.
3 Remove the wheel housing trim and the front section of the wing liner.
4 Unplug the connector (only EVAP canister with electrically controlled purge valve) and disconnect the hoses. Note the positions of the hoses.
5 Remove the EVAP canister purge valve (electrically controlled only) and transfer it to the new EVAP canister.
6 Hook the new EVAP canister onto the holder.

Note

Note the position of the valve (electrically controlled only).

Fitting

Fit in reverse order.

Note

Pay attention to the direction of the arrow (electrically controlled only).

EVAP canister purge valve (electrically controlled)

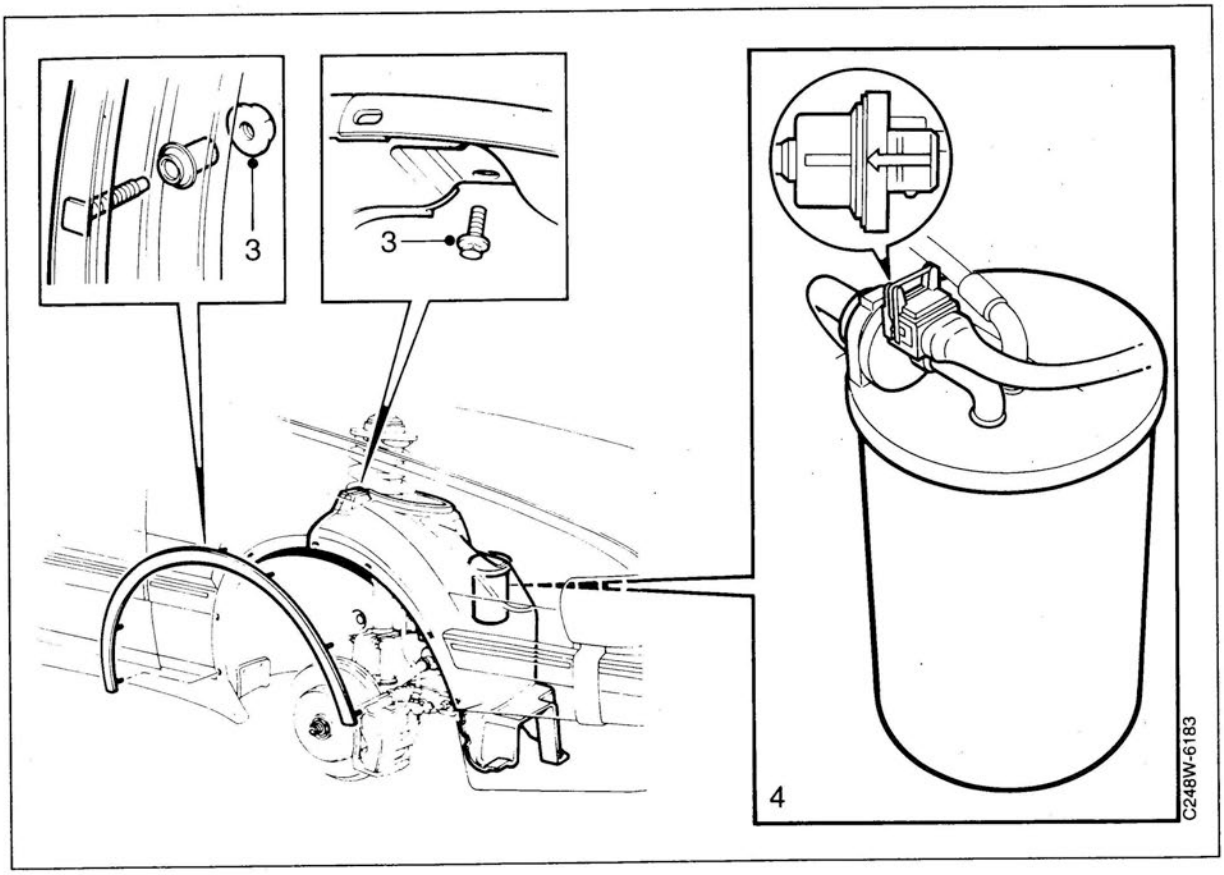

Removal

1 Raise the car.
2 Remove the right-hand front wheel.
3 Remove the wheel housing trim and the front section of the wing liner.
4 Unplug the connector and disconnect the hoses.
5 Remove the purge valve.

Note

Pay attention to the position of the valve.

Fitting

Fit in reverse order.

Note

Fit the valve as shown. Note the direction of the arrow.

Intake manifold (B202)

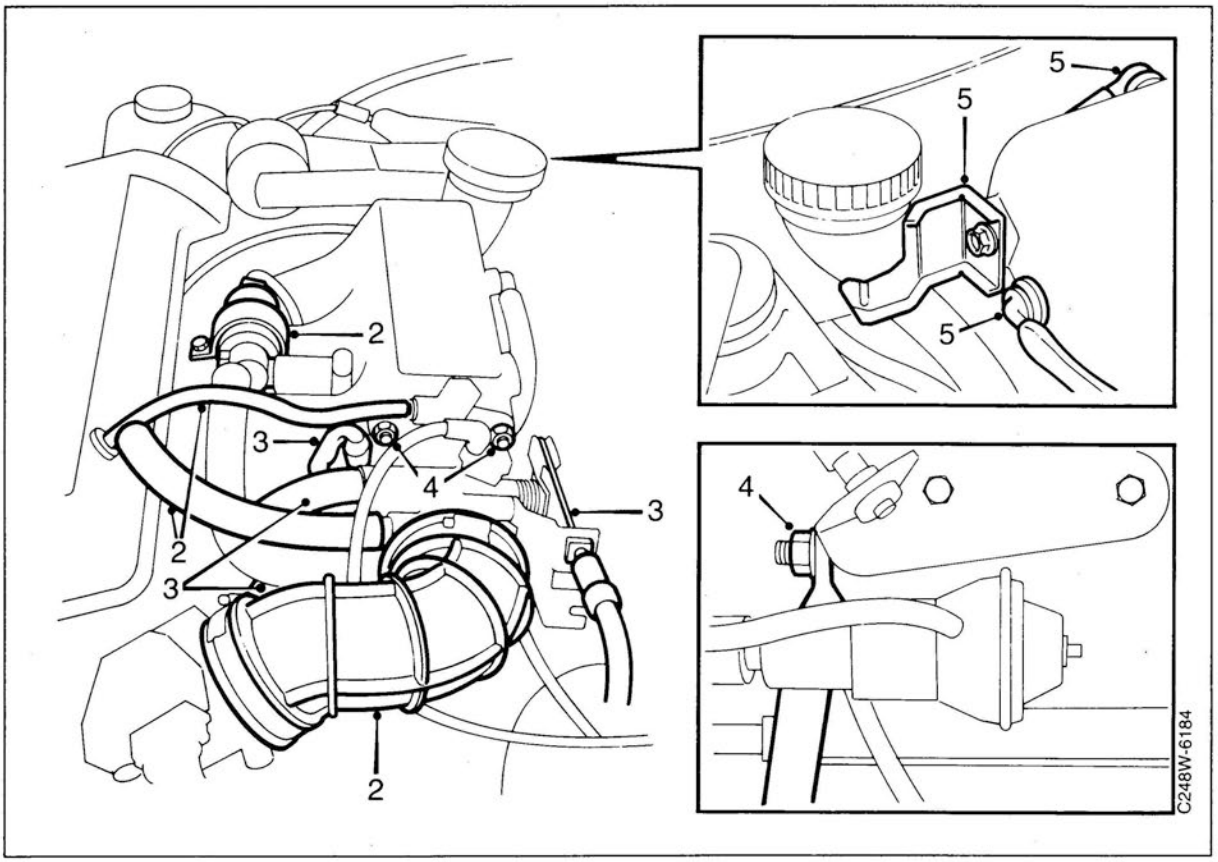

Removal

1 Drain the coolant. Disconnect the negative battery cable.

2 Remove the hose from the throttle body and the hoses for crankcase ventilation and the idle air control valve.

3 Remove the throttle cable/kick-down wire, unplug the throttle position switch connector and disconnect the two coolant hoses from the throttle body.

4 Remove the throttle body.

5 Remove the bracket for the oil filler pipe and all vacuum hoses on the intake manifold. Lay bare the cold-starting valve and detach the EGR pipe from the EGR valve.

Intake manifold (B202), contd.

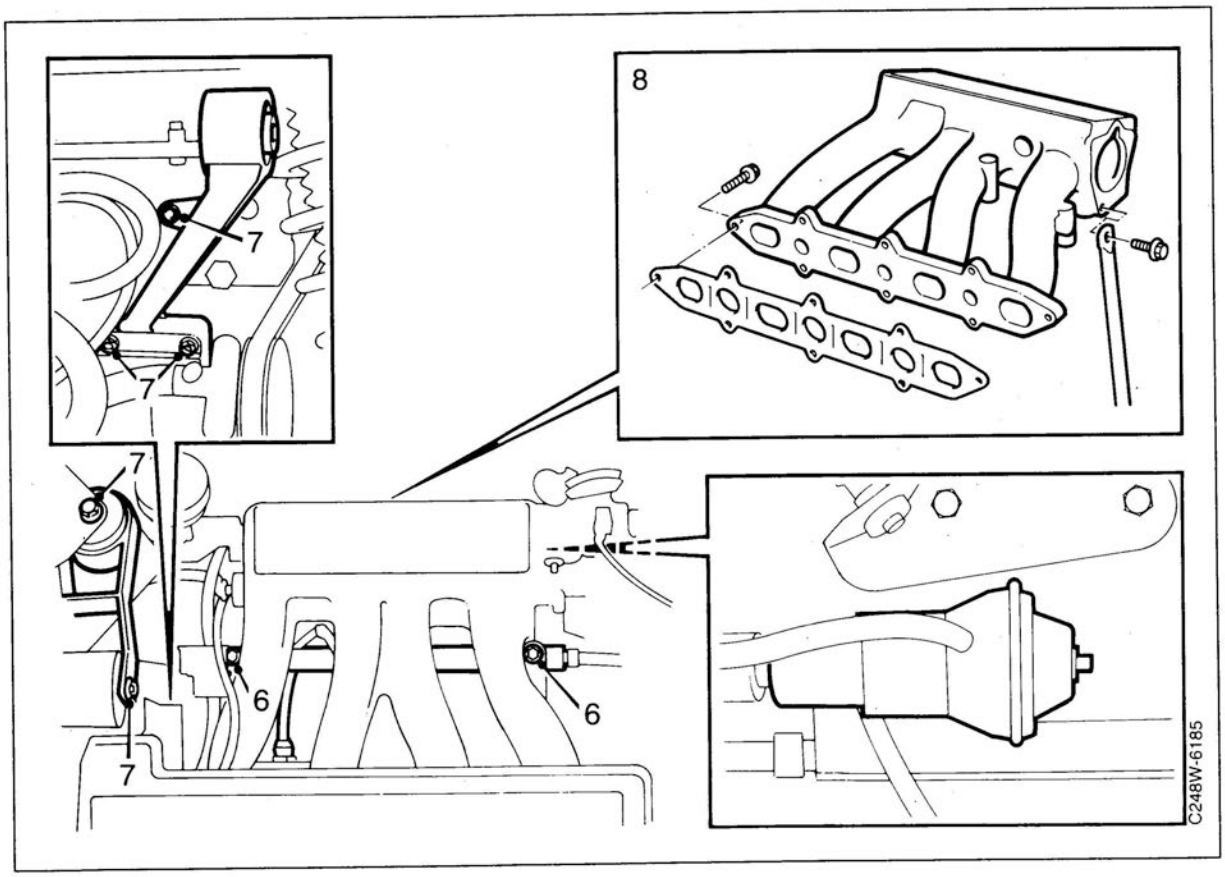

6 Lay bare the fuel rail with injectors. Unplug the connector from the temperature sensor (NTC resistor) and disconnect the ground cables from the intake manifold.

7 Remove the right-hand torque arm from the car body and engine.

8 Remove the intake manifold retaining bolts and the intake manifold.

Fitting

Scrape clean the gasket surfaces on the cylinder head and intake manifold.

Position the gasket and intake manifold. Fit the bolts and tighten them, using a torque wrench.
Tightening torque: 22 Nm

Fit in reverse order. Lubricate the injector O-rings with vaseline to facilitate assembly.

Check the kick-down wire and adjust it, if necessary. See page 241.

Adjust the clock, radio and any other electrical equipment.

Carry out an operational check to ensure that everything is in proper working order.

Intake manifold, divided (B202)

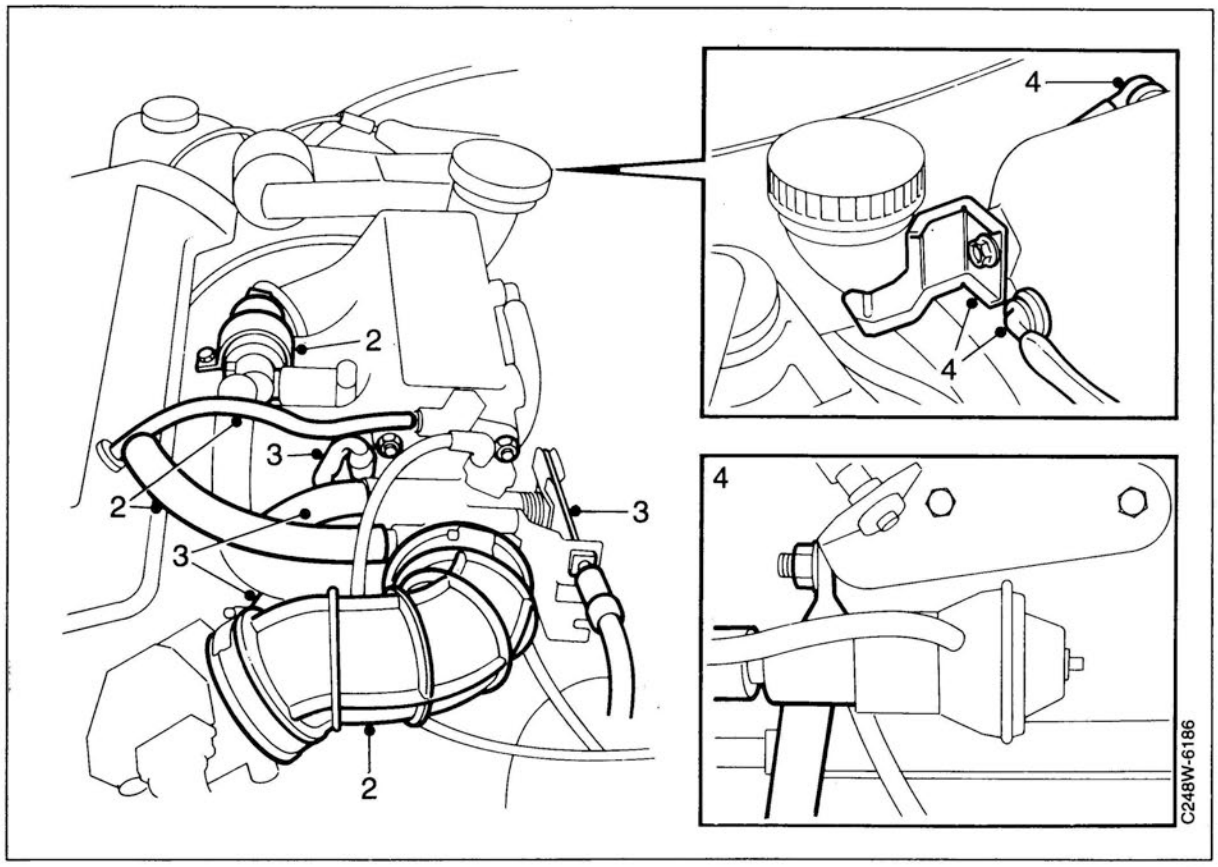

Removal

1 Drain the coolant. Disconnect the negative battery cable.

2 Remove the hose from the throttle body and the hoses for crankcase ventilation and the idle air control valve.

3 Remove the throttle cable/kick-down wire, unplug the throttle position switch connector and disconnect the two coolant hoses from the throttle body.

4 Remove the bracket for the oil filler pipe and all vacuum hoses on the intake manifold. Lay bare the cold-starting valve and detach the EGR pipe from the EGR valve.

Intake manifold, divided (B202), contd.

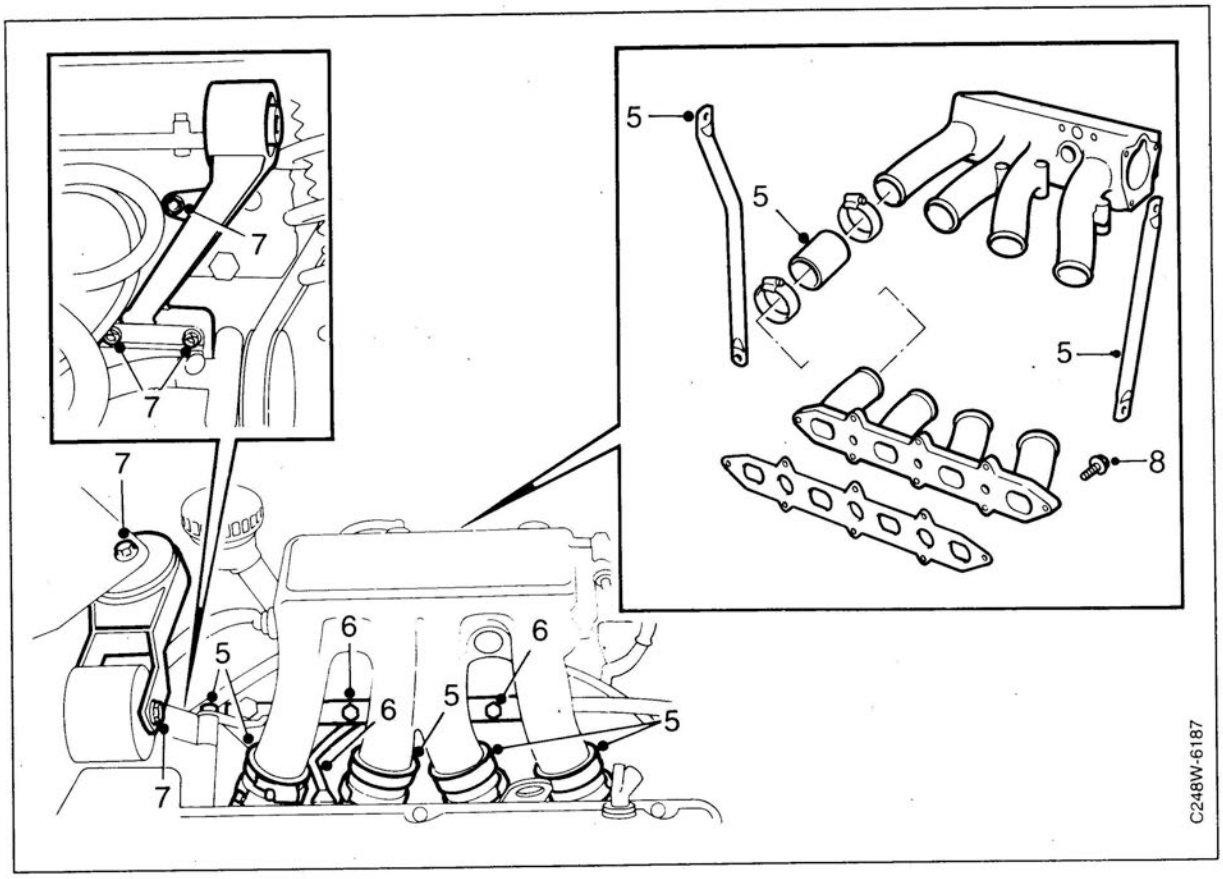

5 Remove the steady bars from the intake manifold and the hose clips on the rubber sleeves. Lift up the outer intake manifold.

6 Lay bare the fuel rail with injectors. Unplug the connector from the temperature sensor (NTC resistor) and disconnect the ground cables from the intake manifold.

7 Remove the torque arm.

8 Remove the intake manifold retaining bolts and the intake manifold.

Fitting

Scrape clean the gasket surfaces on the cylinder head and intake manifold.

Position the gasket and intake manifold. Fit the bolts and tighten them, using a torque wrench.
Tightening torque: 22 Nm

Fit in reverse order. Lubricate the injector O-rings with vaseline to facilitate assembly.

Check the kick-down wire and adjust it, if necessary. See page 241.

Adjust the clock, radio and any other electrical equipment.

Carry out an operational check to ensure that everything is in proper working order.

Intake manifold, removal of upper half (B234i)

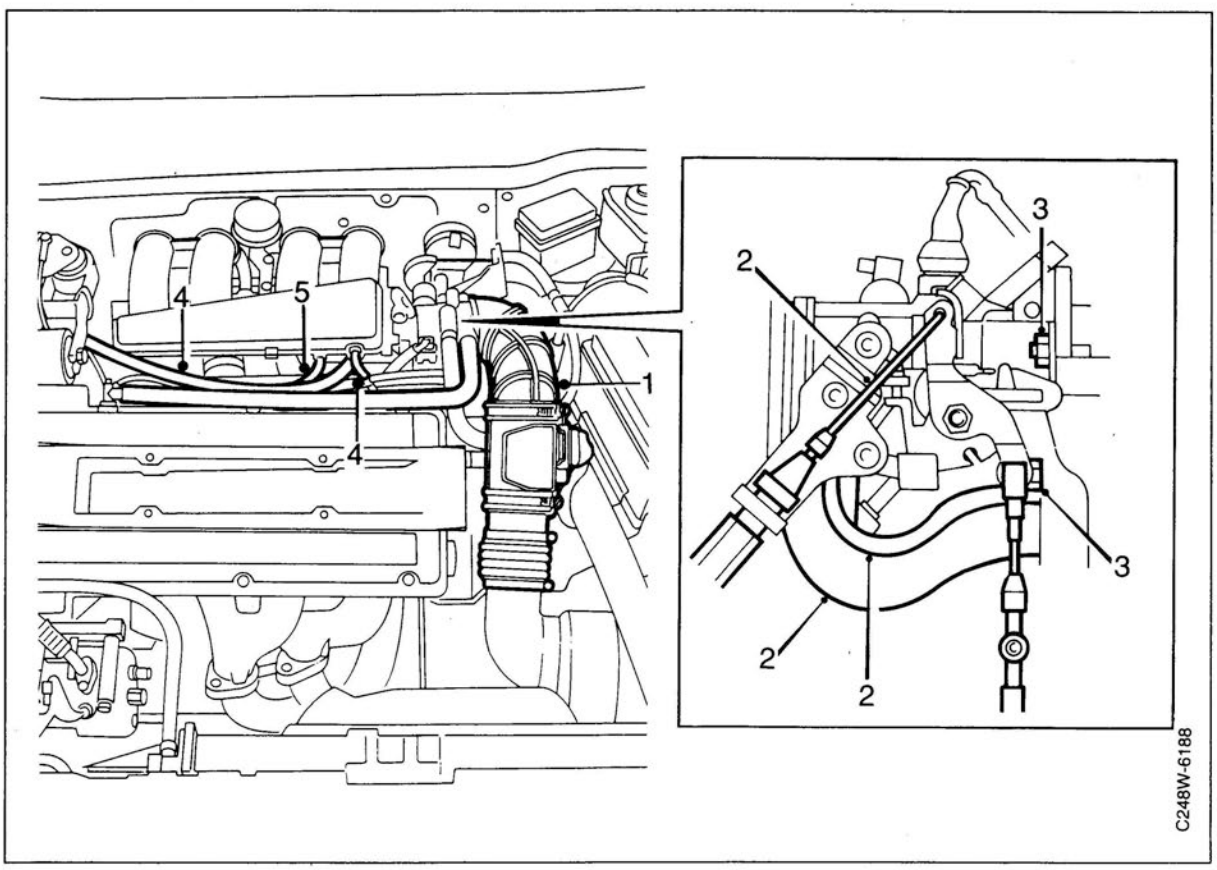

Removal

1 Remove the hose between the throttle body and resonance chamber.

2 Detach the idle air control valve's hose from the throttle body and disconnect the kick-down wire.

3 Undo the nuts and lay bare the throttle body.

4 Remove the fuel pressure regulator's vacuum hose and the thin crankcase ventilation hose from the intake manifold.

5 Detach the EVAP canister's vacuum hose from the intake manifold.

Intake manifold, upper half (B234i), contd.

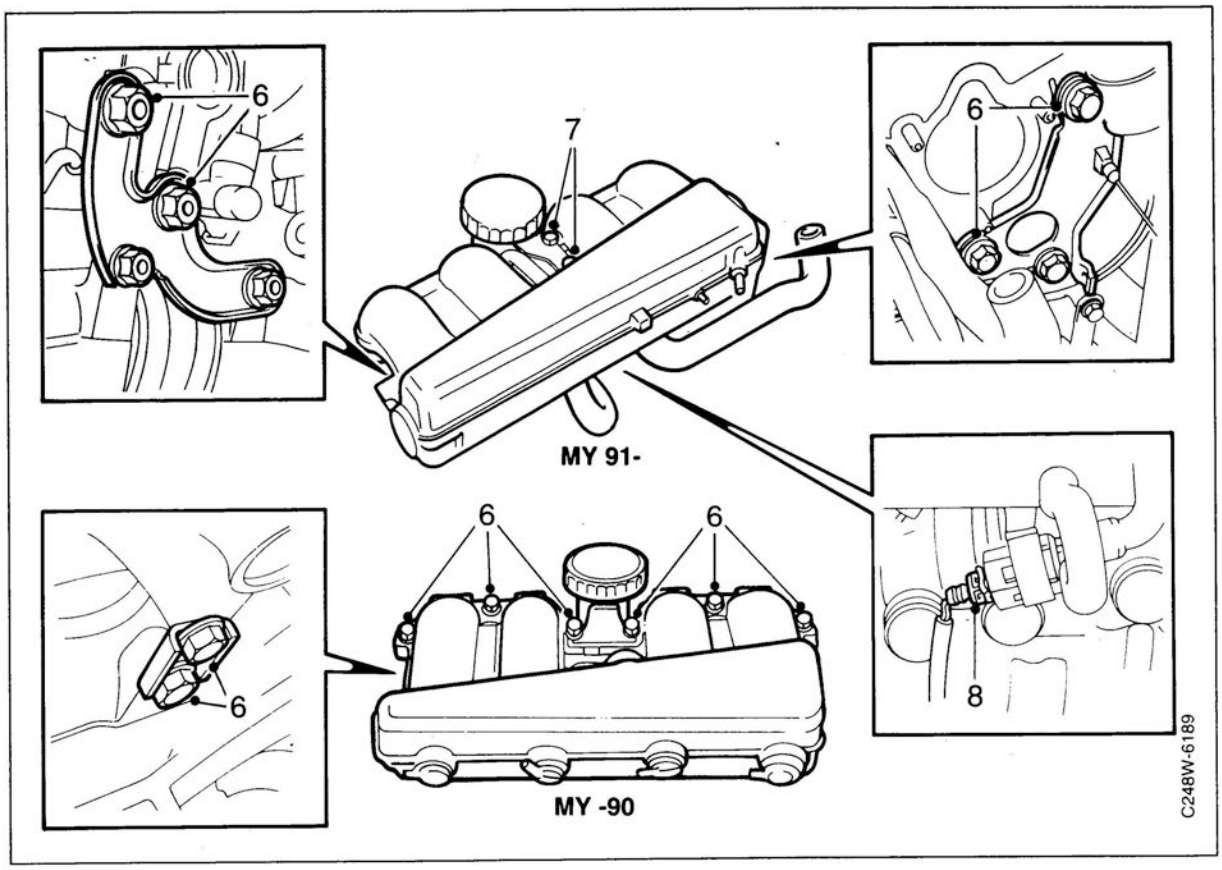

6 Remove the retaining bolts in the sides of the upper half of the intake manifold and slacken the bolts in the lower half slightly.

7 Remove the oil filler pipe's retaining bracket and remove the remaining retaining bolts in the upper half of the intake manifold.

8 Lift off the upper half of the intake manifold and unplug the idle air control valve connector.

Fitting

Inspect the rubber hoses/gaskets between the two halves of the intake manifold and also the throttle body O-ring.

Check the kick-down wire and adjust it if necessary. See page 241.

In other respects, fit in reverse order.

Intake manifold (B234i)

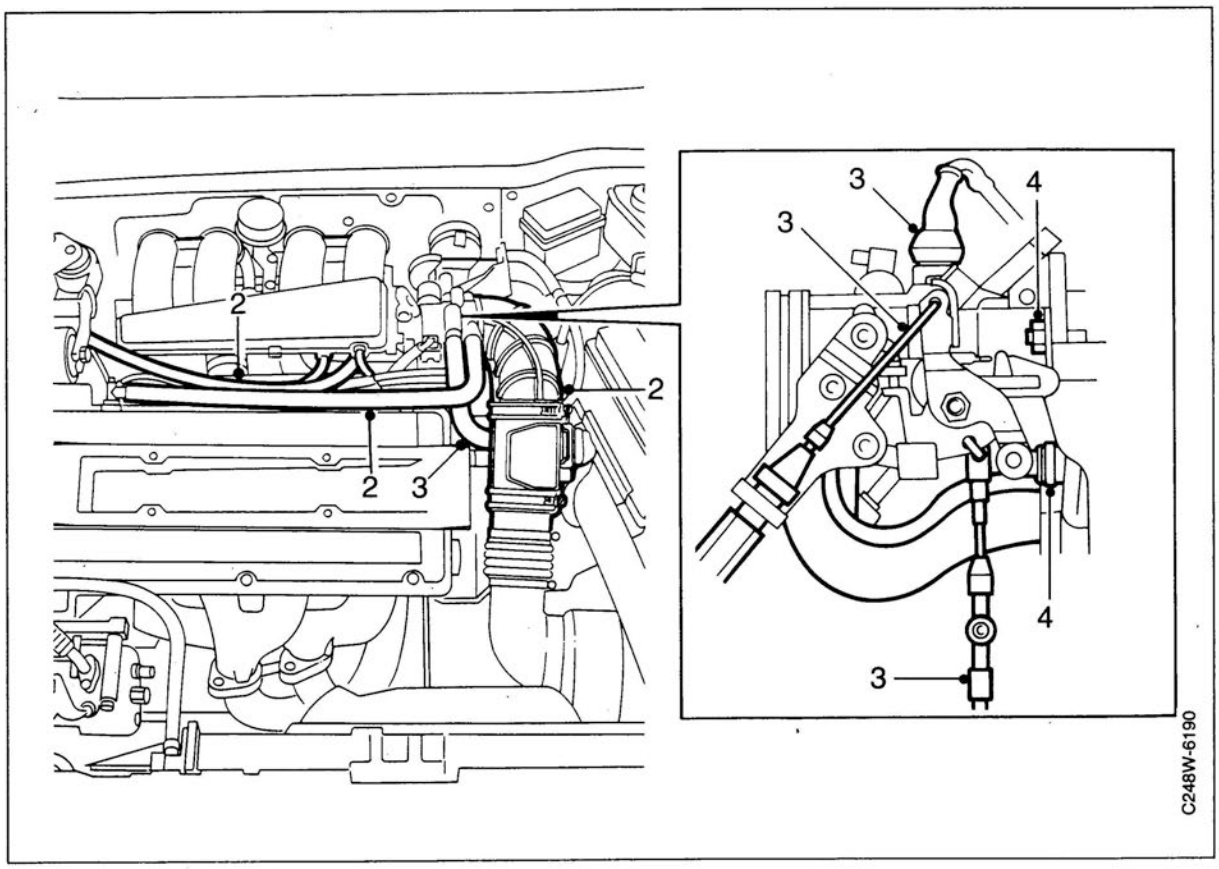

Removal

1 Drain the coolant. Disconnect the negative battery cable.

2 Remove the hose from the throttle body and the hoses for crankcase ventilation and the idle air control valve.

3 Remove the throttle cable/kick-down wire, unplug the throttle position switch connector and disconnect the two coolant hoses from the throttle body.

4 Remove the throttle body.

Intake manifold (B234i), contd.

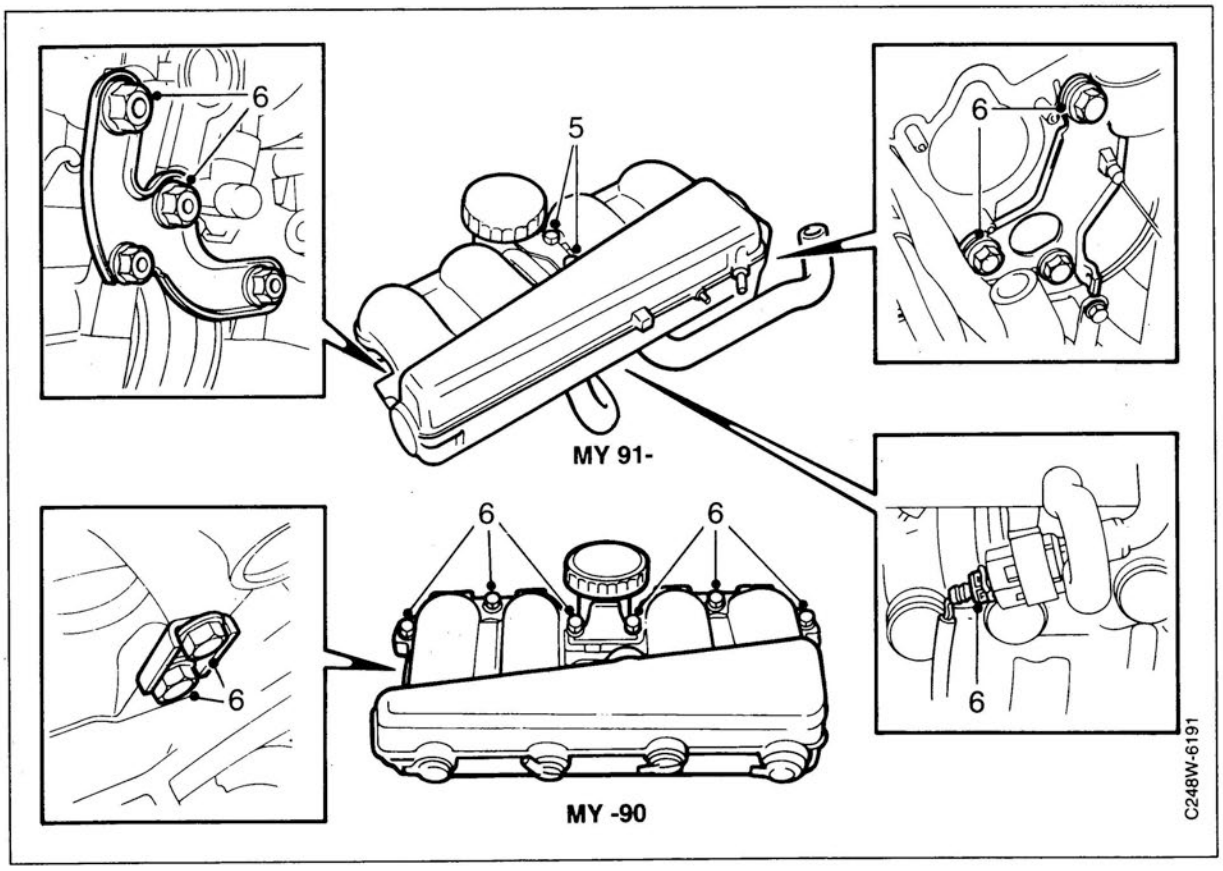

5 Remove the retaining bolts in the sides of the upper half of the intake manifold and slacken the bolts in the lower half slightly.

6 Remove the oil filler pipe's retaining bracket and remove the remaining retaining bolts in the upper half of the intake manifold. Raise the intake manifold and the idle air control valve's cable.

Intake manifold (B234i), contd.

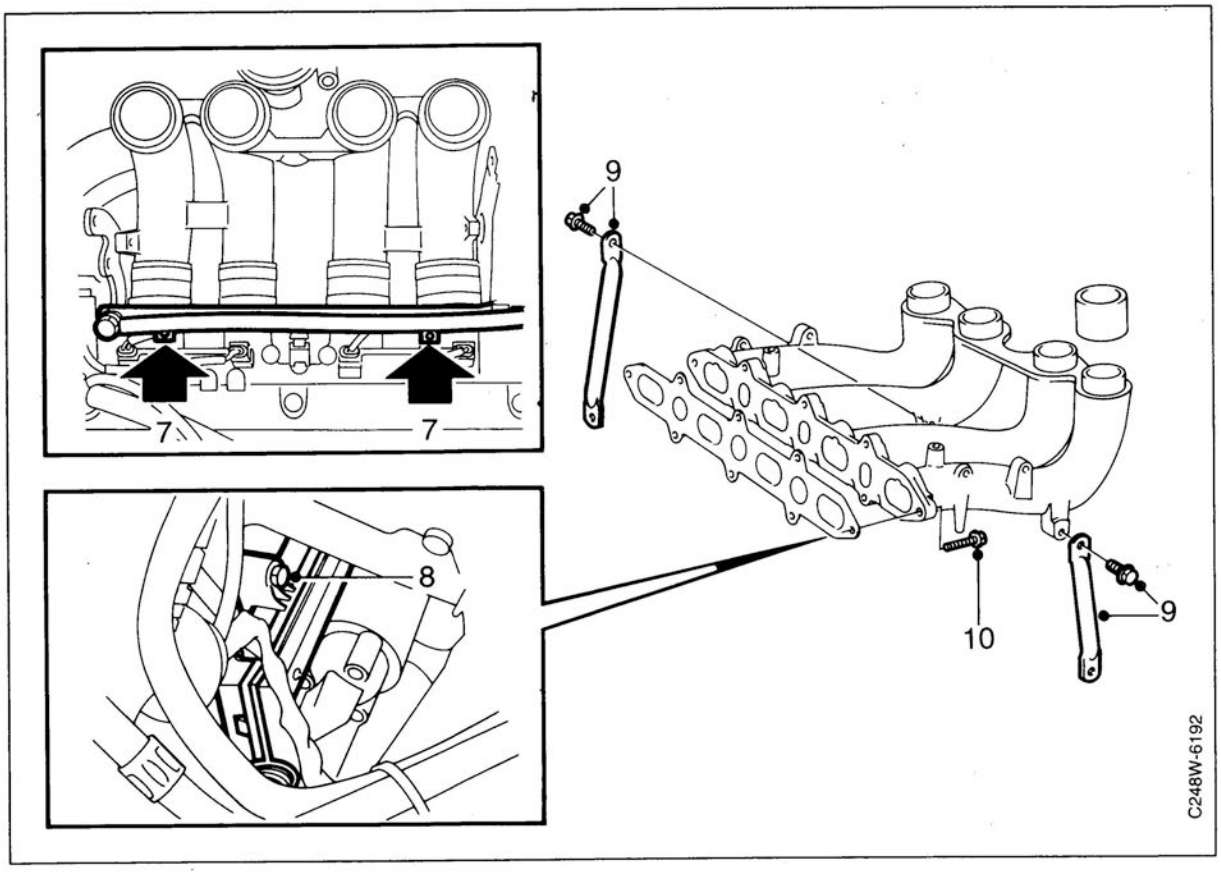

7 Lay bare the fuel rail with injectors. Unplug the connector from the temperature sensor (NTC resistor) and disconnect the ground cables from the intake manifold.

8 Remove the two wiring harness retaining bolts under the intake manifold.

9 Remove the bolts securing the lower intake manifold's steady bars.

10 Remove the bolts securing the lower intake manifold to the cylinder head. Remove the intake manifold.

Fitting

Scrape clean the gasket surfaces on the cylinder head and intake manifold.

Position the gasket and intake manifold. Fit the bolts and tighten them, using a torque wrench.
Tightening torque: 22 Nm

Fit in reverse order. Lubricate the injector O-rings with vaseline to facilitate assembly.

Check the kick-down wire and adjust it if necessary. See page 241

Adjust the clock, radio and any other electrical equipment.

Carry out an operational check to ensure that everything is in proper working order.

Intake manifold (B234T)

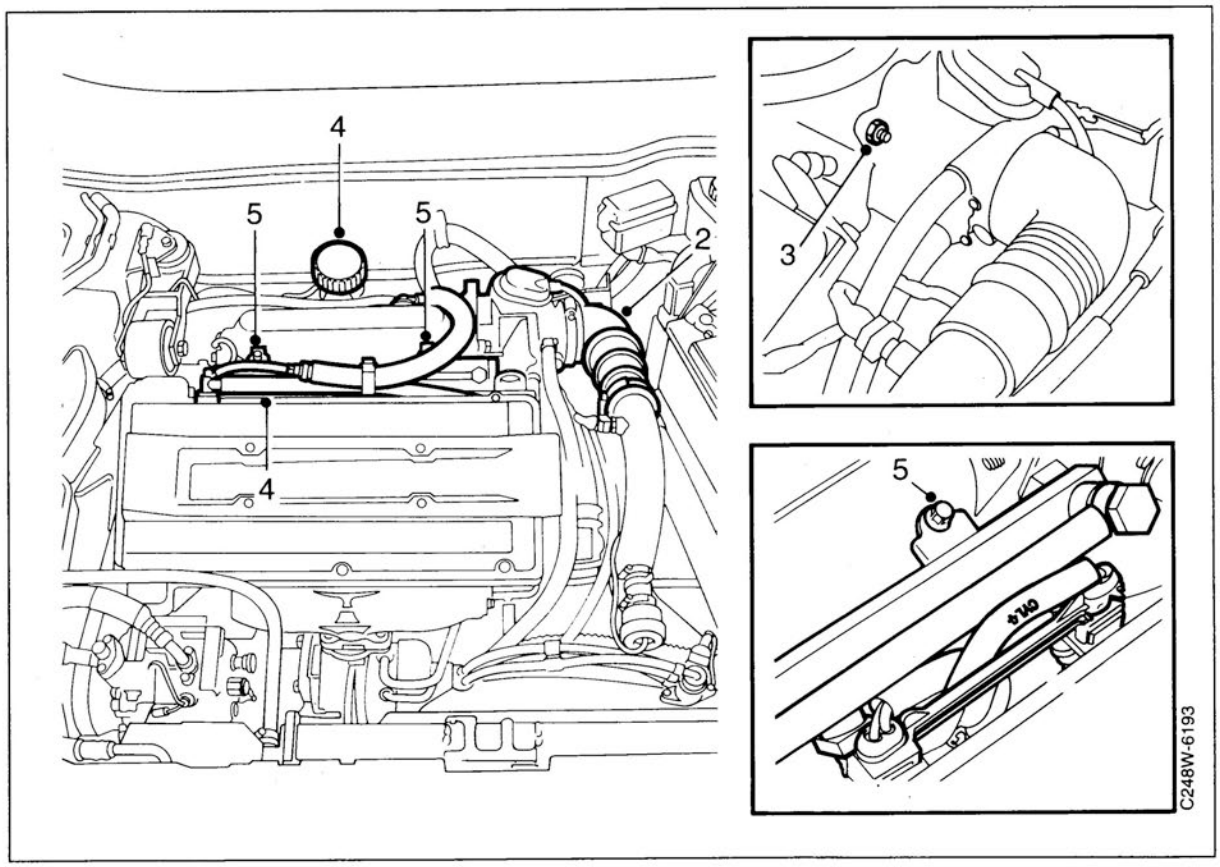

Removal

1 Drain the coolant. Disconnect the negative battery cable.

2 Remove the turbocharger delivery pipe's hose.

3 Remove the throttle body.

4 Remove the oil filler pipe bracket. Remove the nipple on the vacuum hose for the brake servo from the pipe, the hose nipple from the pipe connected to the camshaft cover, and the hoses connected to the purge valve and the idle air control valve.

5 Lay bare the fuel rail with injectors. Unplug the connector from the temperature sensor (NTC resistor) and disconnect the ground cables on the intake manifold.

Intake manifold (B234T), contd.

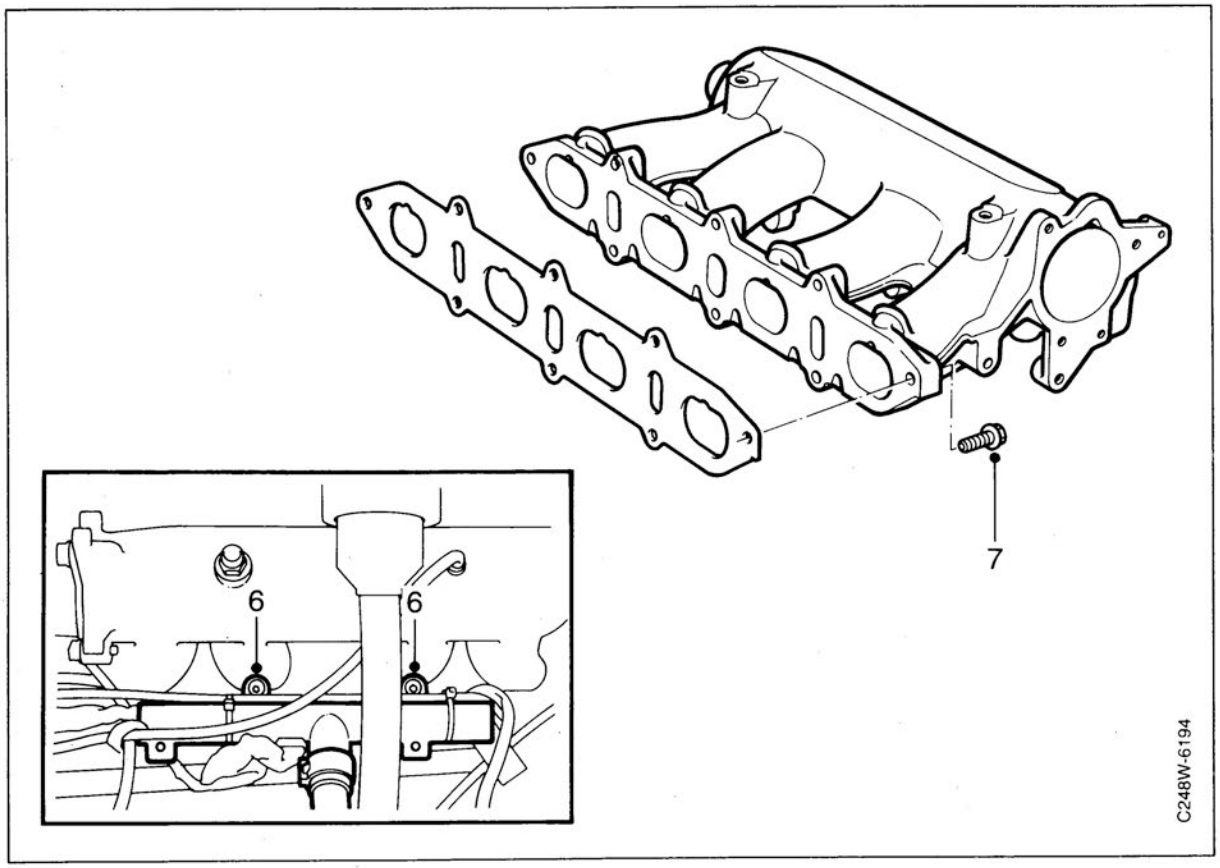

6 Remove the torque arm.

7 Remove the intake manifold retaining bolts and the intake manifold.

Fitting

Scrape clean the gasket surfaces on the cylinder head and intake manifold.

Position the gasket and intake manifold. Fit the bolts and tighten them, using a torque wrench.
Tightening torque: 22 Nm

Fit in reverse order. Lubricate the injector O-rings with vaseline to facilitate assembly.

Check the kick-down wire and adjust it if necessary. See page 241.

Adjust the clock, radio and any other electrical equipment.

Carry out an operational check to ensure that everything is in proper working order.

Injectors (B202)

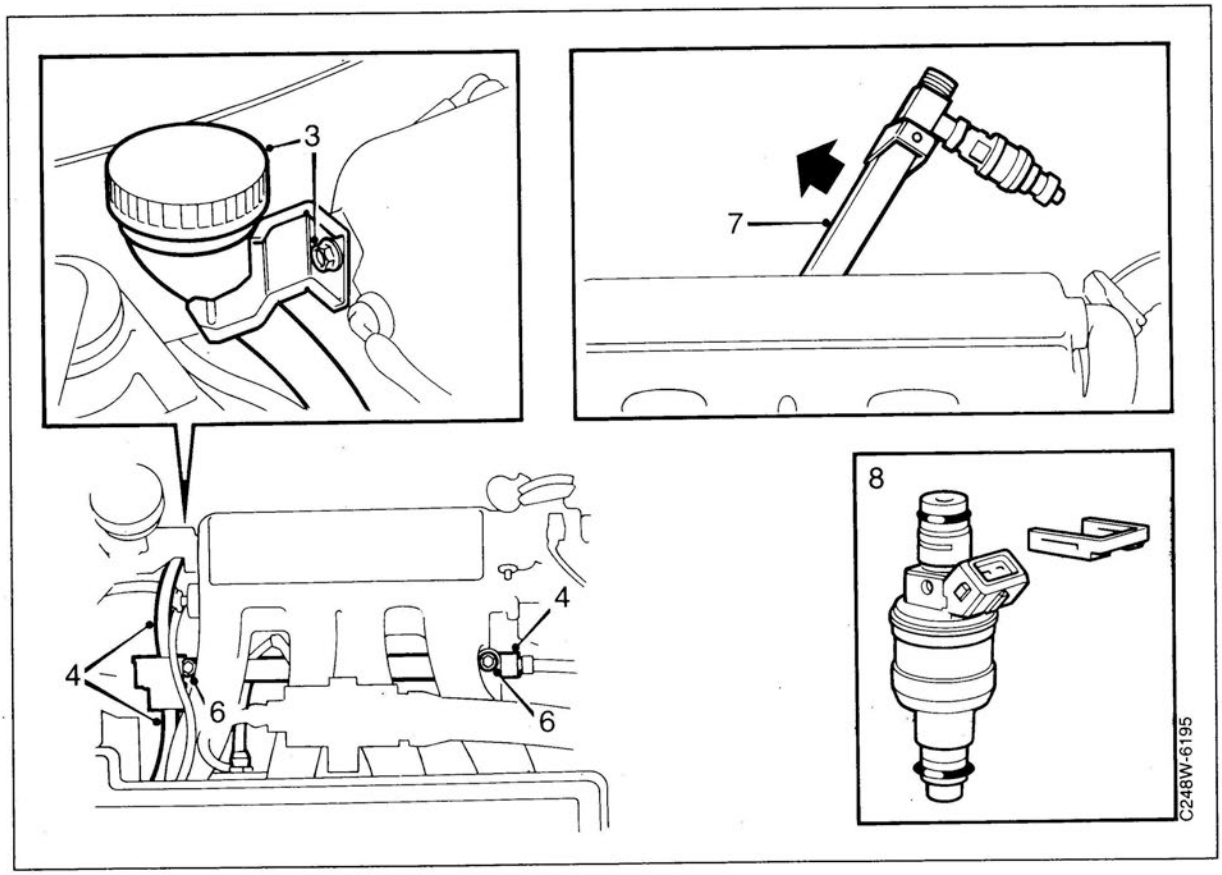

⚠ WARNING

Work only in a well-ventilated area. If approved equipment for the extraction of fuel vapour is available, be sure to use it.

Wear protective gloves. Prolonged contact with fuel may give rise to skin irritation or dermatitis.

Be mindful of the danger of causing sparks, such as when making and breaking electrical circuits, short circuiting components, etc.

No smoking anywhere in the vicinity!

Always have a suitable fire extinguisher near at hand.

Important

When working on the fuel rail and injectors, take great care to keep everything clean.

Wash the areas round the valves, fuel rail and intake manifold and blow clean with compressed air.

Removal

1 Blow clean with compressed air before starting removal.

2 Remove the bulkhead panel.

3 Remove the intake hose and the dipstick bracket.

4 Make sure you have some paper or the like handy to mop up fuel that runs out of the fuel rail or injectors.
Only -M1987: Disconnect the fuel return hose from the pressure regulator and the vacuum hose.
Unscrew the line from the fuel filter.
Only M1988-: Disconnect the delivery line and return line from the fuel rail.

5 Unplug the connectors from the injectors.

Injectors (B202), contd.

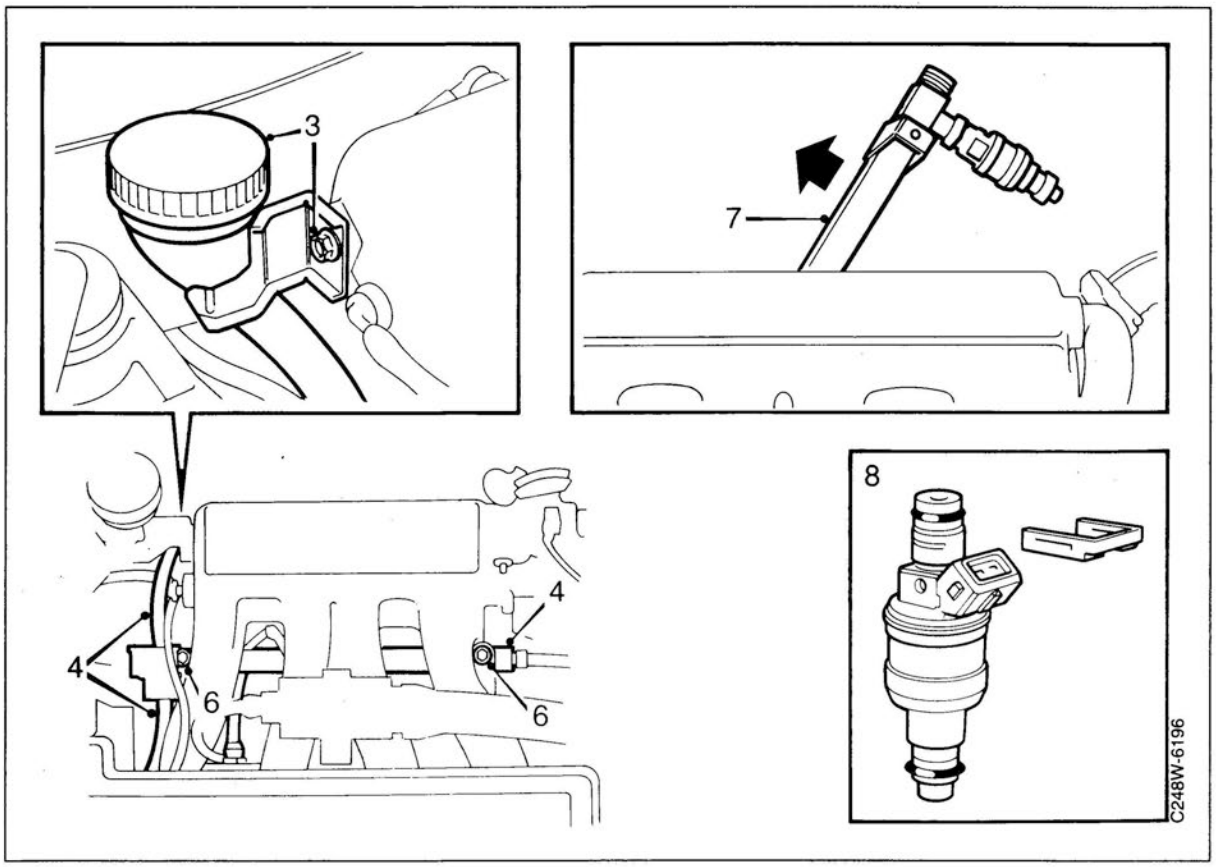

6 Remove the fuel rail from the intake manifold mountings, leaving the injectors in place.

7 Lift up the rail together with the injectors between the intake manifold and the bulkhead partition. On cars with a **divided** intake manifold, lift up the rail to the left.

8 Remove the clip(s) for the injector or injectors that are to be changed. Then remove the injector from the rail.

Fitting

Fit in reverse order.

Note

Lubricate the O-rings with vaseline to facilitate assembly.

Injectors (B234i)

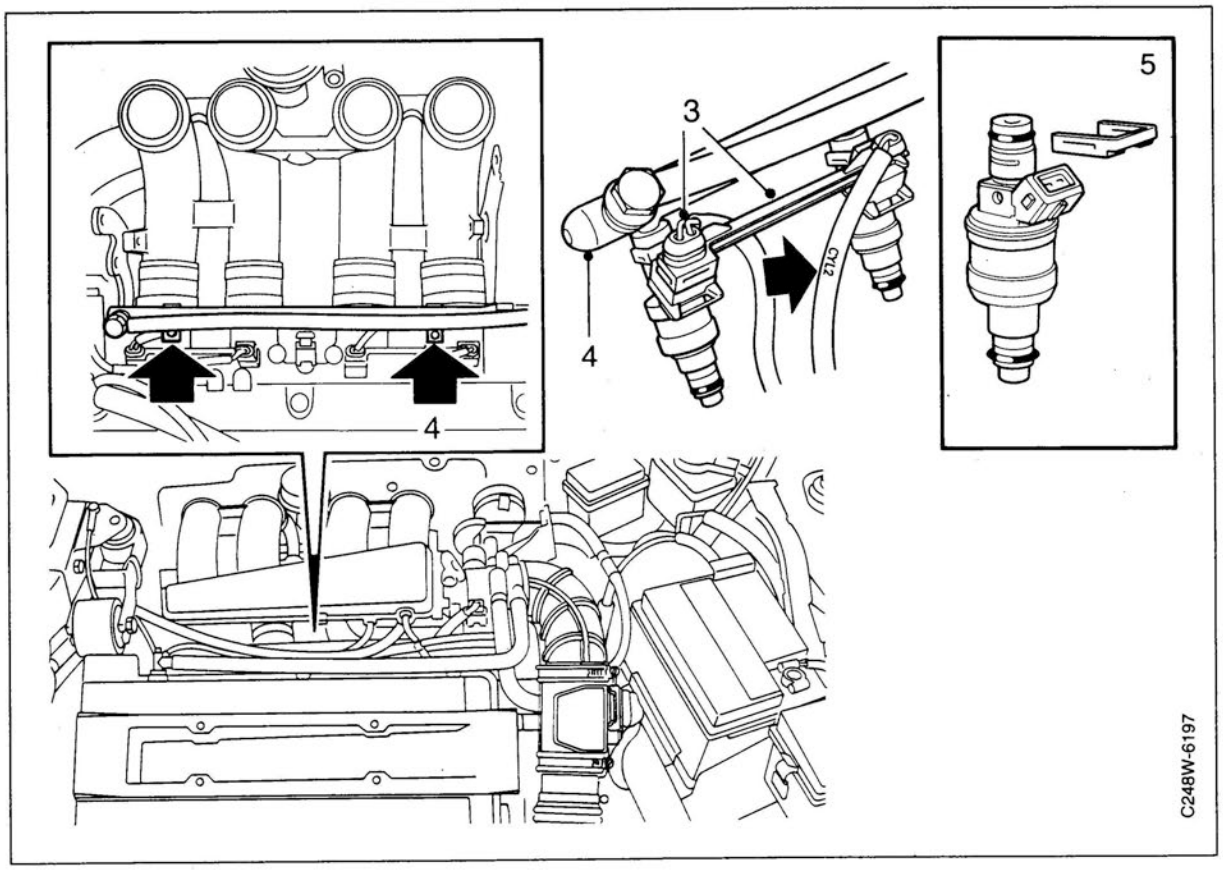

> ⚠ **WARNING**
>
> Work only in a well-ventilated area. If approved equipment for the extraction of fuel vapour is available, be sure to use it.
>
> Wear protective gloves. Prolonged contact with fuel may give rise to skin irritation or dermatitis.
>
> Be mindful of the danger of causing sparks, such as when making and breaking electrical circuits, short circuiting components, etc.
>
> No smoking anywhere in the vicinity!
>
> Always have a suitable fire extinguisher near at hand.

Removal

1 Remove the upper half of the intake manifold, see page 194.

2 Carefully clean the areas round fuel connections and injectors.

3 Remove the two locating rails and unplug the injector connectors.

4 Remove the fuel rail retaining screws and lift up the fuel rail complete with injectors.
Make sure you have some paper or the like handy to mop up fuel that runs out of the fuel rail or injectors.

5 Remove the injector retaining clips and remove the injectors.

Injectors (B234i), contd.

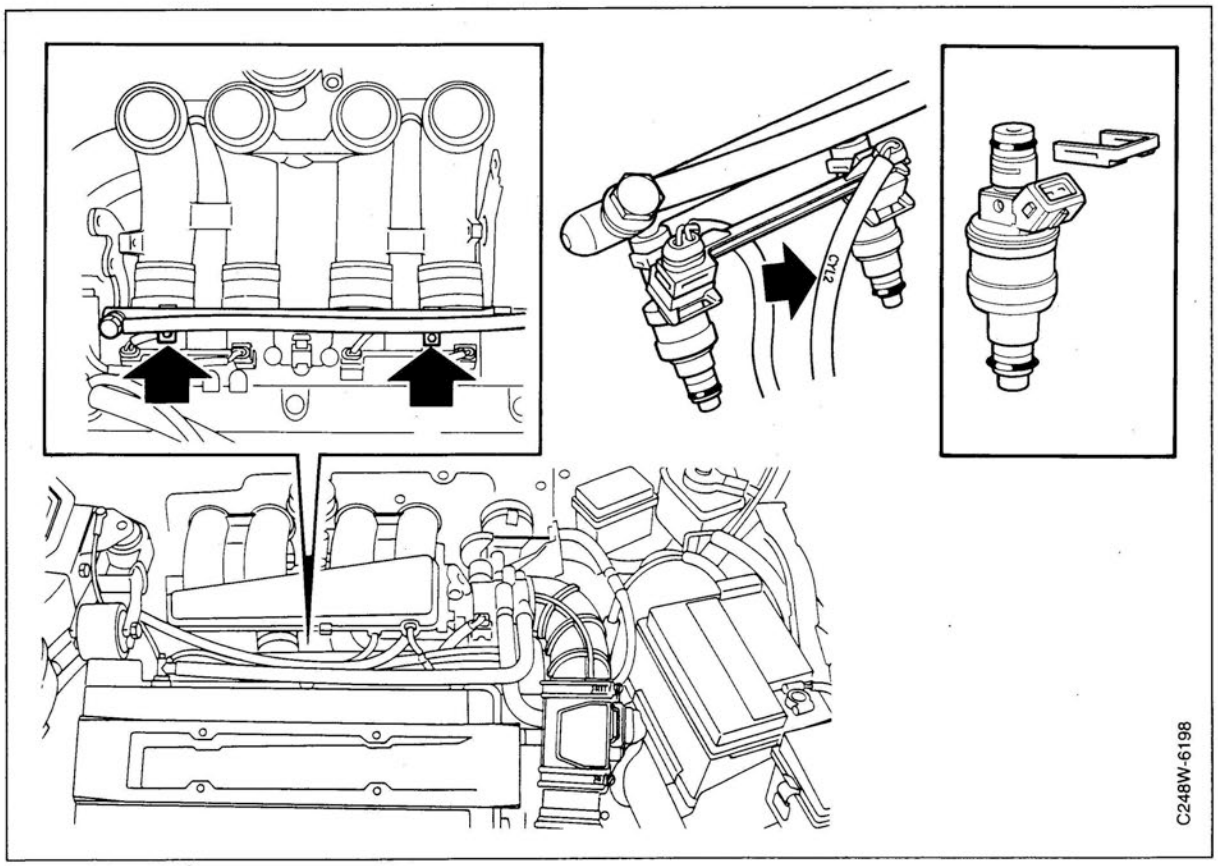

Fitting

Fit in reverse order.

Inspect the rubber hoses/gaskets between the two halves of the intake manifold and also the throttle body O-ring.

Check the kick-down wire and adjust it if necessary, see page 241.

Note

Lubricate the O-rings with vaseline to facilitate assembly.

Important

Make sure that the connectors are plugged into the right injectors. The cables are marked.

Injectors (B234T)

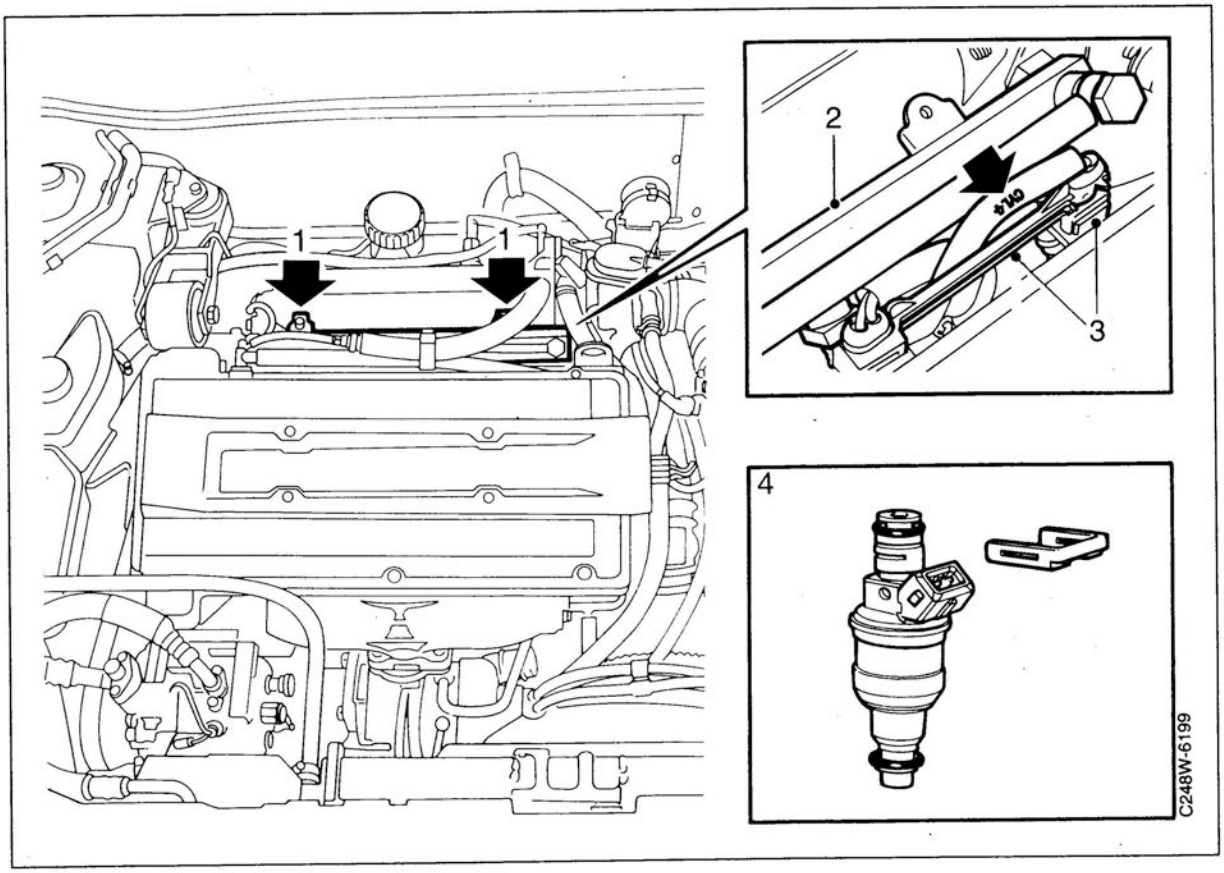

⚠ WARNING

Work only in a well-ventilated area. If approved equipment for the extraction of fuel vapour is available, be sure to use it.

Wear protective gloves. Prolonged contact with fuel may give rise to skin irritation or dermatitis.

Be mindful of the danger of causing sparks, such as when making and breaking electrical circuits, short circuiting components, etc.

No smoking anywhere in the vicinity!

Always have a suitable fire extinguisher near at hand.

Important

When working on the fuel rail and injectors, take great care to keep everything clean.

Wash the areas round the valves, fuel rail and intake manifold and blow clean with compressed air.

Removal

1 Remove the bolts from the fuel rail.

2 Carefully lift up the fuel rail complete with injectors.
Make sure you have some paper or the like handy to mop up fuel that runs out of the fuel rail or injectors.

3 Remove the two locating rails and unplug the injector connectors.

4 Remove the locking clips holding the injectors to the fuel rail and withdraw the injectors.

Injectors (B234T), contd.

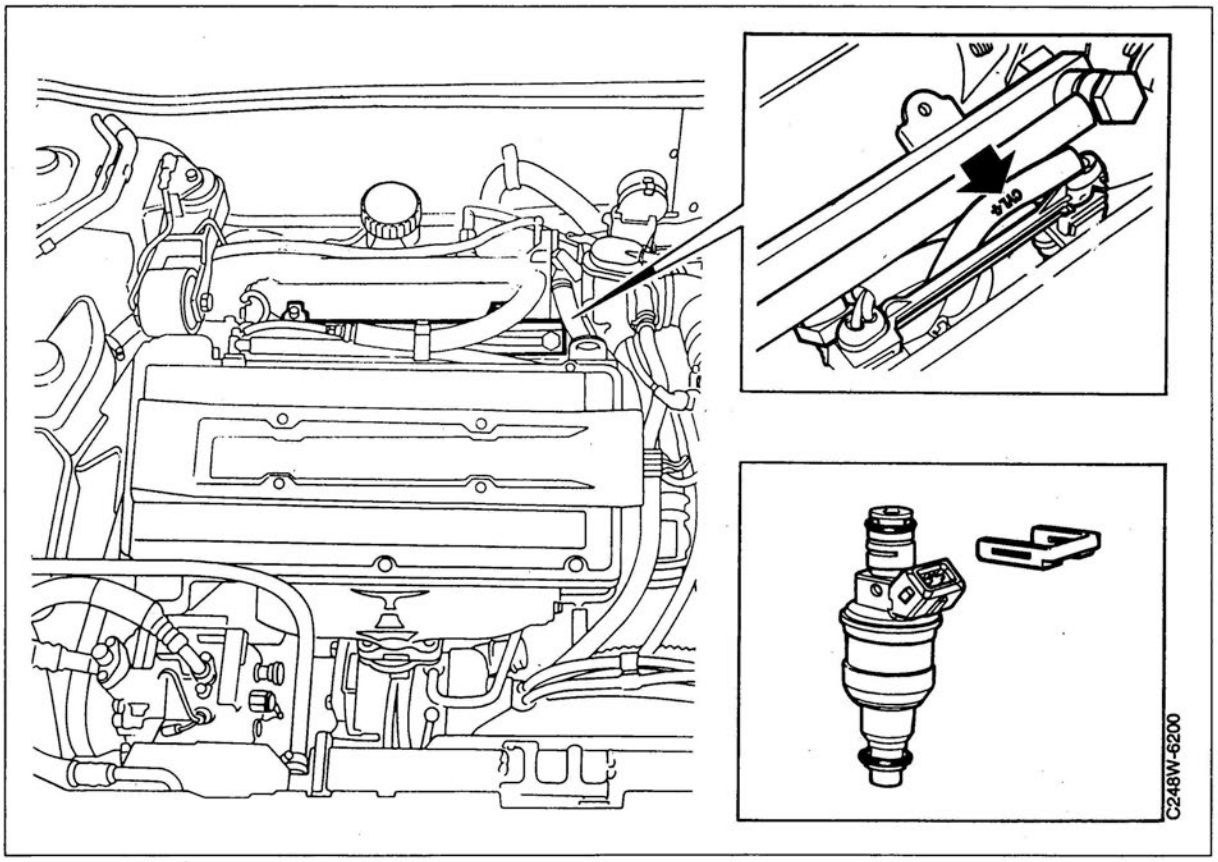

Fitting

Fit in reverse order.

Note

Lubricate the O-rings with vaseline to facilitate assembly.

Important

Make sure that the connectors are plugged into the right injectors. The cables are marked.

Cleaning and checking the injectors

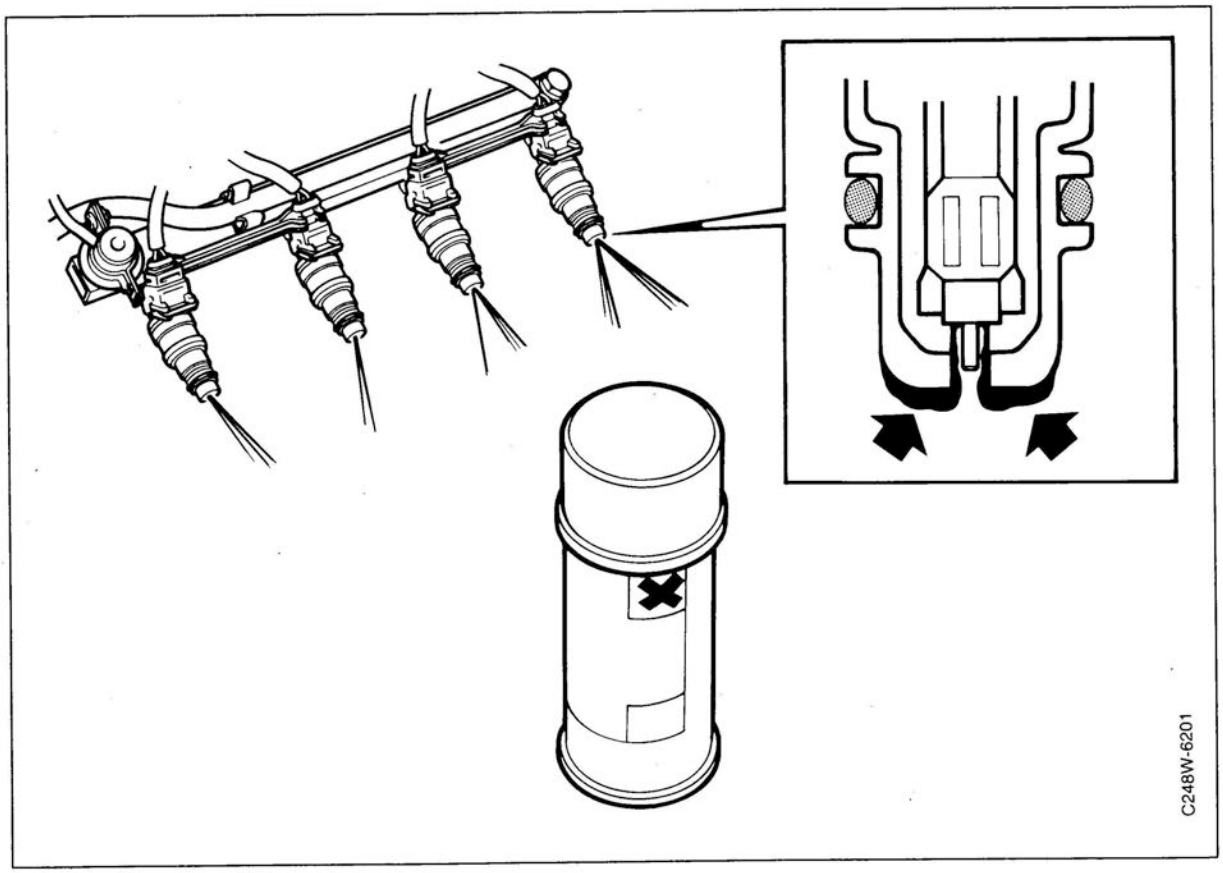

Background

Complaints about poor starting, idling and acceleration performance have in most cases proved to be due to clogged injectors.

These deposits are caused by unstable petrol components (e.g. olefins) and an insufficiency of suitable solvents combined with corrosion-inhibiting agents.

The deposits give rise to an uneven injection pattern, which in its turn is the cause of uneven fuel distribution in the combustion chambers. This results in uneven and incomplete combustion.

The solution to the above problems is to remove the carbon and fuel deposits from the injectors.

We therefore recommend the use of "Liquid Fuel Injector Cleaner" solvent in combination with "Saab Injector Cleaner/Tester" equipment for cleaning and checking the injectors.

⚠ WARNING

The mixture of solvent and fuel that is used for cleaning the injectors is highly volatile and inflammable. It is also applied under pressure, which makes it even more advisable to exercise the utmost caution when using it.

Carry out the work of cleaning the injectors at a safe distance from other work where sparks or a naked flame occur (welding).

If possible, keep a fire extinguisher near at hand.

Use approved ventilation/extraction equipment or work outdoors.

Wear protective gloves and goggles.

Cleaning and checking the injectors (contd.)

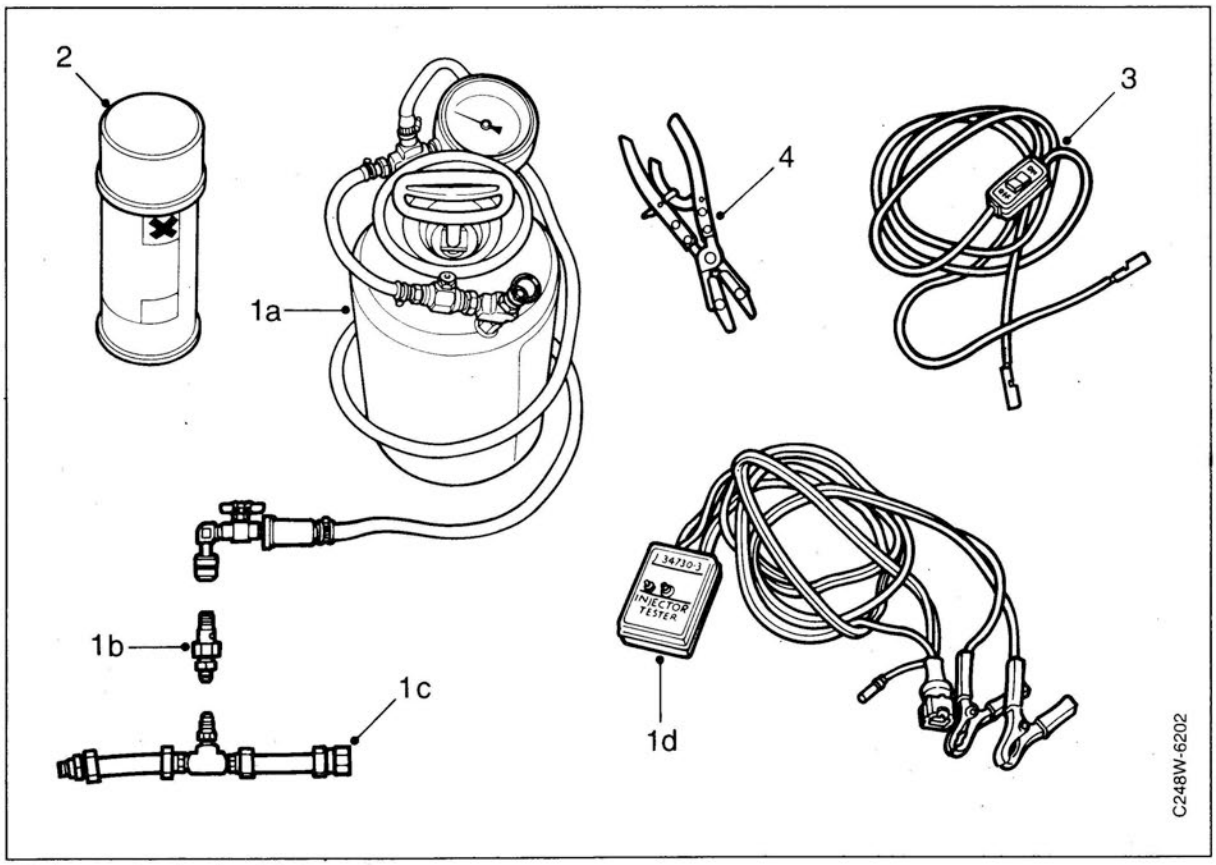

Equipment for cleaning injectors

1a Saab Injector Cleaner/Tester 83 94 264
1b Adapter 83 94 280*)
1c Adapter 83 94 298*)
1d Test box*)
2 Liquid Fuel Injector Cleaner 83 94 272
3 Cable with switch 83 93 886
4 Locking hose-clamp pliers

*) included in 83 94 264

Cleaning and checking the injectors (contd.)

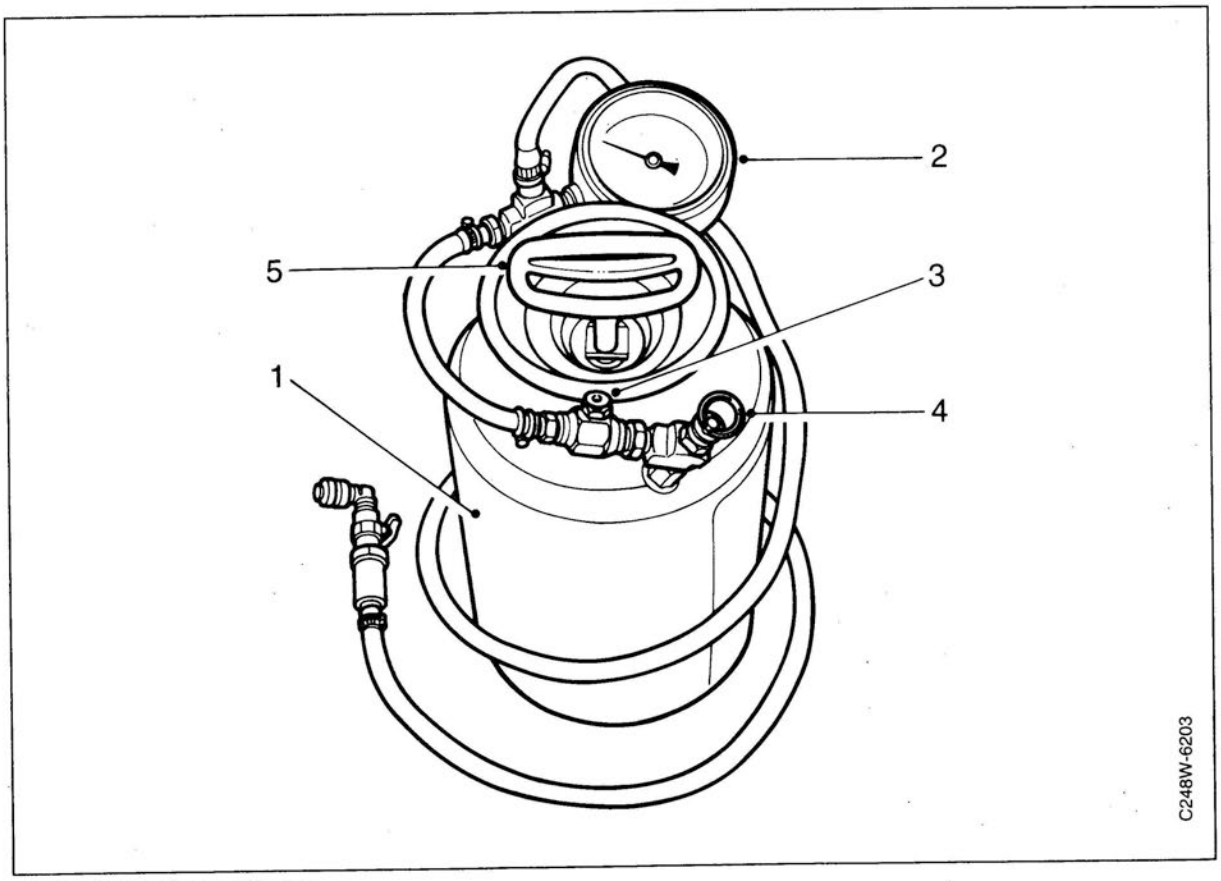

Saab Injector Cleaner/Tester

1 Container
2 Pressure gauge
3 Pushbutton valve
4 Safety valve
5 Pump

Cleaning and checking the injectors (contd.)

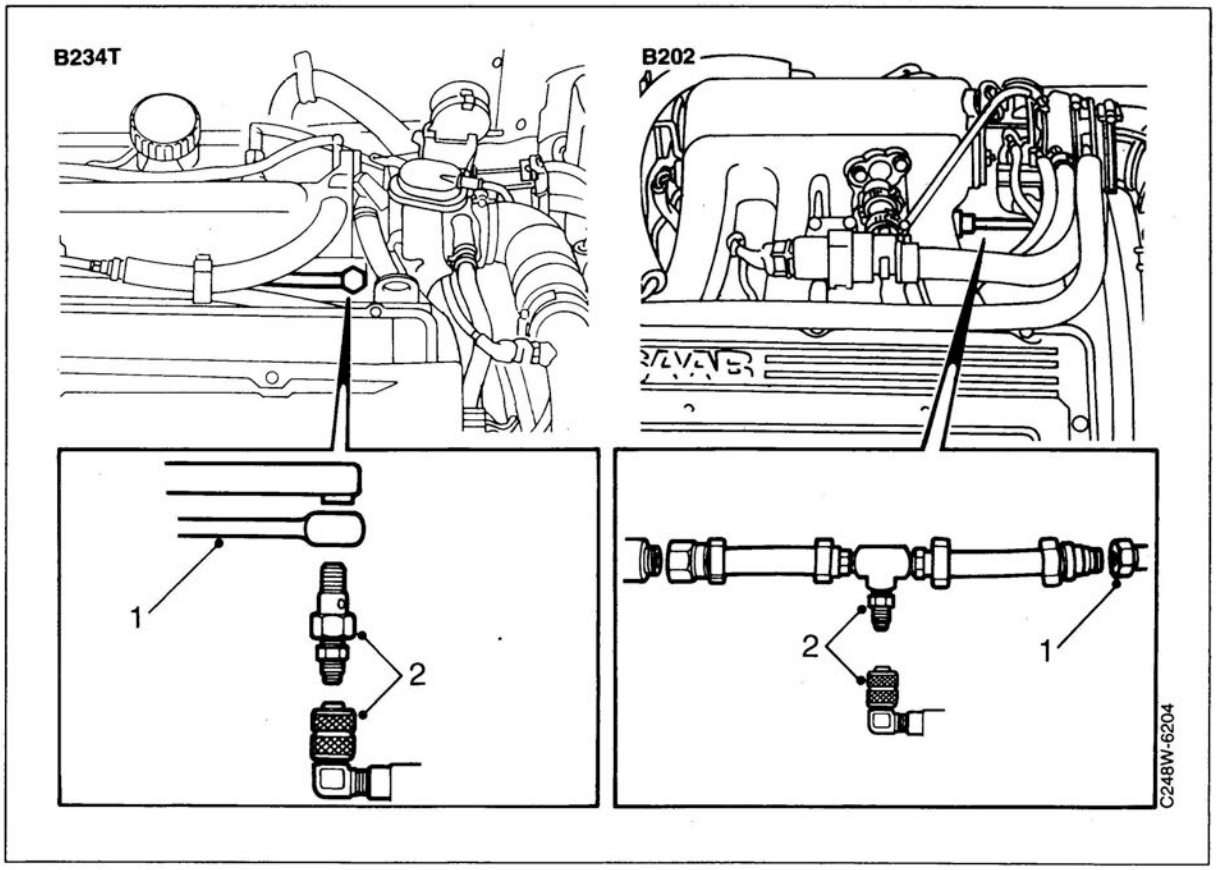

Before starting any work

Carry out the work in the following order:

A Cleaning

B Checking

If a check shows that one or more injectors still do not work satisfactorily, repeat the cleaning process and then check them again.

If, in spite of this, an injector still shows too great a difference in performance as compared to the others, it should be changed.

Note

To be sure of a change in flow capacity, it is recommended that checking be carried out before cleaning is started, see page 214.

Cleaning

1 Disconnect the fuel line from the fuel rail. Fit adapter 83 94 280 with fuel line to the fuel rail.

2 Connect the pressure container's fitting to the adapter and make sure that the valve in the fitting is open.
M1988- cars with a catalytic converter and M1989- cars without a catalytic converter:
Remove the bracket for the dipstick tube and bend aside the tube before fitting the adapter.
-M1987 cars with a catalytic converter and -M1988 cars without a catalytic converter:
Fit adapter 83 94 298 between the fuel line and the fuel rail.

Cleaning and checking the injectors (contd.)

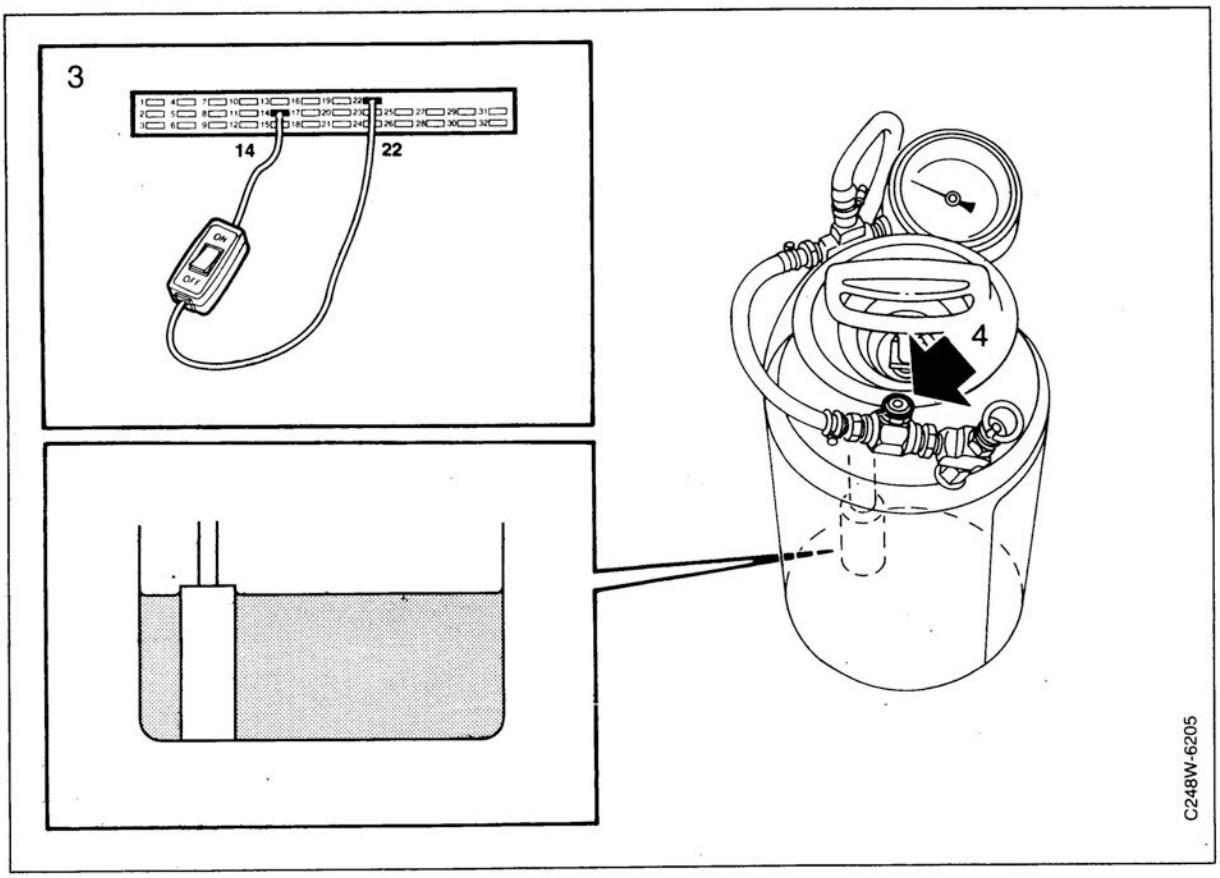

3 Remove fuses 14 and 22.
Start the fuel pump by connecting cable 83 93 886 between the live (battery) side of the holder for fuse 22 and the non-live side of the holder for fuse 14.
Set the switch to the "ON" position.

4 Press the pushbutton on the valve in the container's fitting, causing fuel to flow into the container.
Fill the container with fuel until it is level with the top of the vertical white tube at the bottom of the container. Stop the fuel pump by setting the switch to "OFF".

Cleaning and checking the injectors (contd.)

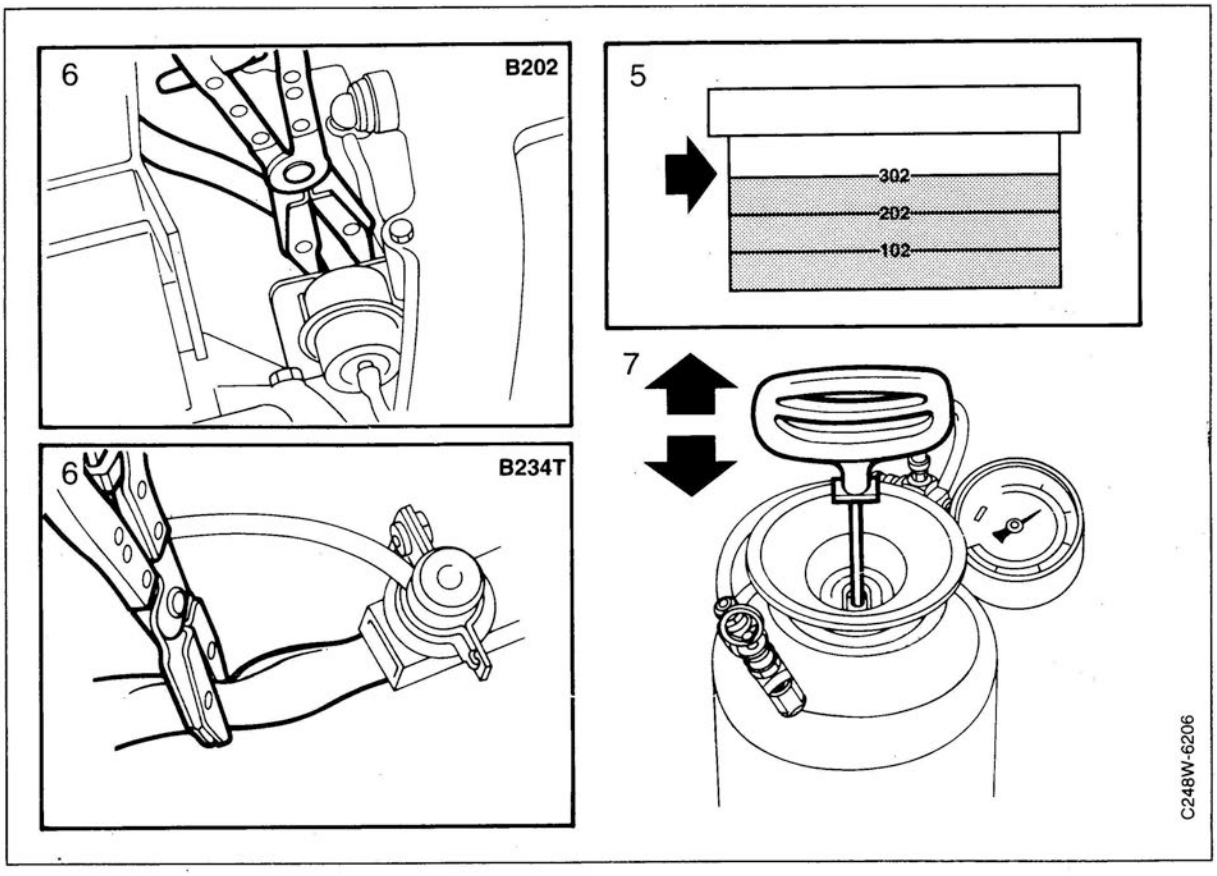

⚠ WARNING

Liquid Fuel Injector Cleaner is a solvent which could be harmful if inhaled and contact with it may also give rise to skin irritation. It is therefore advisable to work only in a well ventilated area and wear protective gloves and goggles.

5 Pour three graduations (ounces) of Liquid Fuel Injector Cleaner solvent, part No. 83 94 272, into the lid of the container. Pour the solvent into the container.
Mix petrol and solvent by carefully sloshing the mixture around in the container.

6 Make sure that the fuel-solvent mixture does not enter the car's fuel tank, as it could cause damage to the fuel lines and fuel tank.
Restrict the fuel return line from the fuel pressure regulator, using a pair of locking pliers or similar. It is important that the jaws of the pliers are rounded so that the fuel line is not damaged.

7 Tighten the lid/pump on the pressure container and pump up the pressure to 1.9 bar (28 psi).

Cleaning and checking the injectors (contd.)

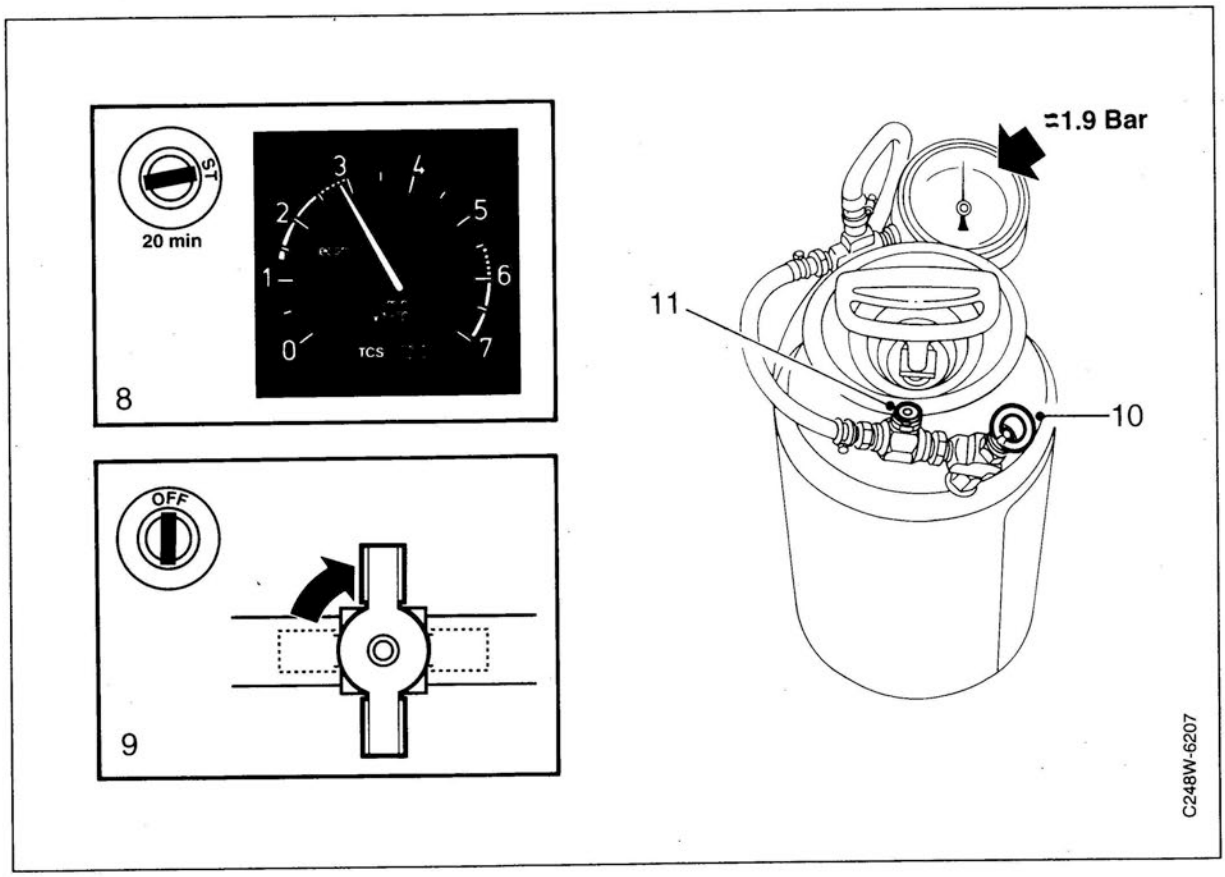

8 Start the car and run the engine at about 3,000 rpm for 20 minutes. Compensate for the pressure drop as it occurs by pumping up the pressure in the container so that it is in the vicinity of 1.9 bar (28 psi).

9 After 20 minutes, switch off the engine and close the valve on the pressure line's fitting with adapter.

10 Release the pressure in the container by pulling the ring of the safety valve.

11 Press the pushbutton valve on the pressure container so that any fuel remaining in the line can run down into the container.

12 Open the return line again by removing the locking pliers.

13 Fit the fuses back in their holders and start the engine. Run it at about 2,000 rpm for 5 minutes, causing all the residual solvent to disappear.

Cleaning and checking the injectors (contd.)

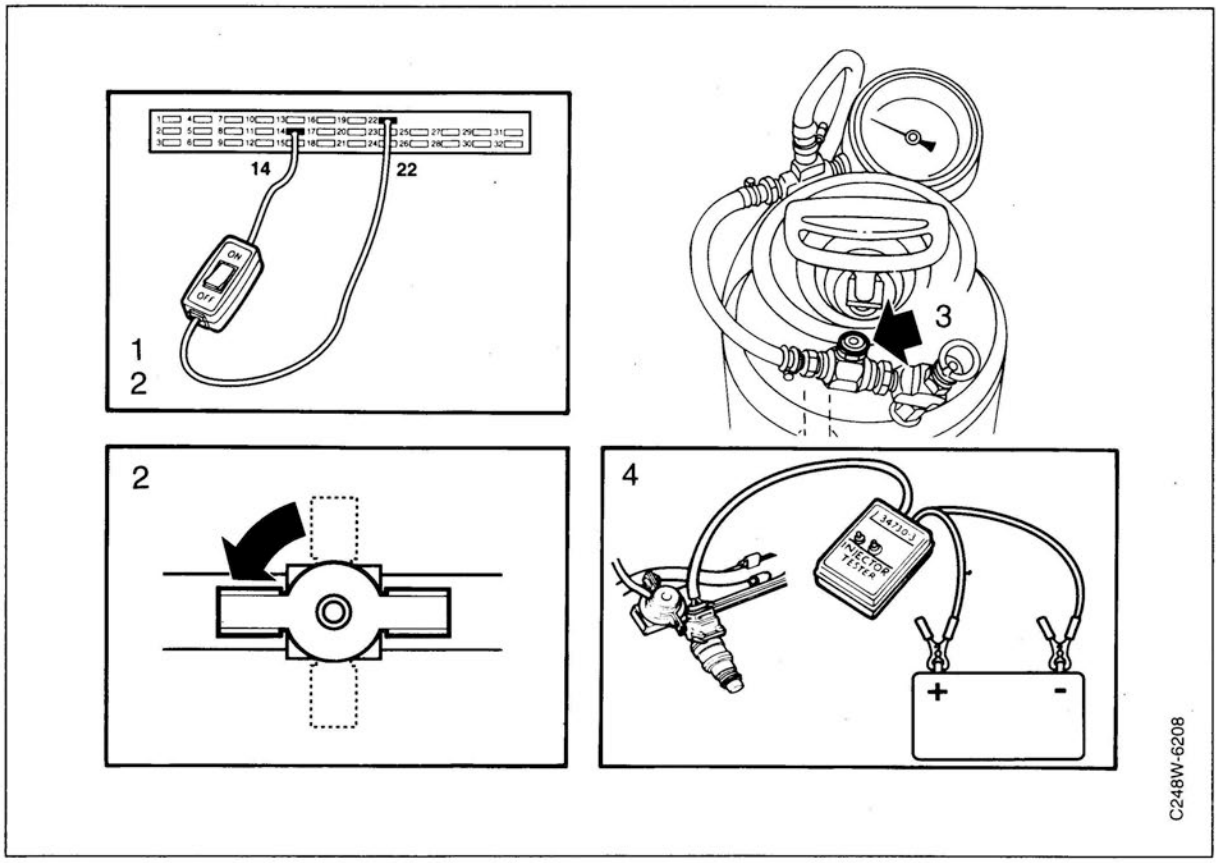

Checking

1 Remove fuses 22 and 14.

2 Open the valve on the pressure line's fitting with adapter. Start the fuel pump by connecting cable 83 93 886 between the live (battery) side of the holder for fuse 22 and the non-live side of the holder for fuse 14.
Set the switch to ON.

3 Press the pushbutton valve on the container for a few seconds, allowing fuel to run out of the system so that any air bubbles will be removed. Stop the pump by setting the switch to OFF.

4 Connect the text box's battery clips to the battery, red clip to positive, black clip to negative. Then unplug all the injector connectors and plug the test box's connector into injector No. 1.
Make sure that the lid/pump is fitted on the pressure container.

Cleaning and checking the injectors (contd.)

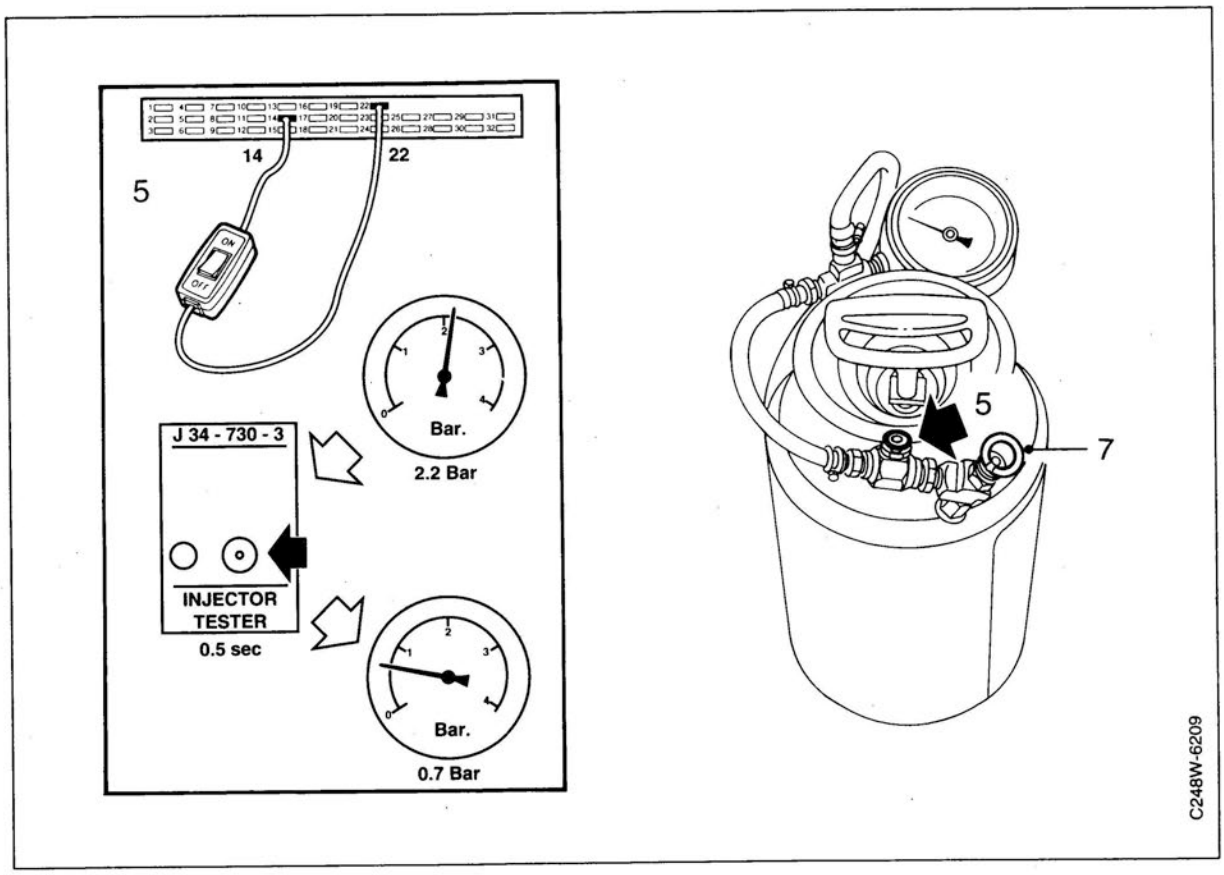

5 Observe the pressure gauge and increase the pressure by restarting the fuel pump.
Set the switch to ON.
Set the switch to OFF and note the reading on the pressure gauge, e.g. 2.2 bar (32 psi).
Press the button on the test box to activate injector No. 1 for 0.5 seconds. When the injector opens, the pressure will drop and the pressure gauge will show a new fixed reading, e.g. 0.7 bar (10 psi), which should be noted.
Deduct the last reading from the first one, i.e. 2.2 - 0.7 = 1.5 bar (32 - 10 = 22 psi), and note the difference (pressure drop) for injector No. 1.

6 Then plug the test box's connector into injectors 2, 3 and 4 one by one and repeat the procedure described in point 1 for each injector.
The pressure drop should be the same for all injectors, the maximum permissible difference between them being 0.2 bar (3 psi). If the pressure drop for one or more of the injectors differs by more than this, points 1-13 must be repeated once again.
If variations in pressure drop are excessive after this, the injector or injectors displaying too great a difference should be changed.

7 Release the pressure in the container by pulling the safety valve's ring and then drain the line by pressing the pushbutton valve on the container.

8 Hold a cloth round the adapter fitting and remove the adapter.
Connect the fuel line.

9 Remove the test box connections from injector and battery. Plug all the connectors into the injectors.

10 Fit fuses 22 and 14 back in place.

11 Start the engine and check the fuel system for leaks.

Fuel pressure regulator (-M1987)

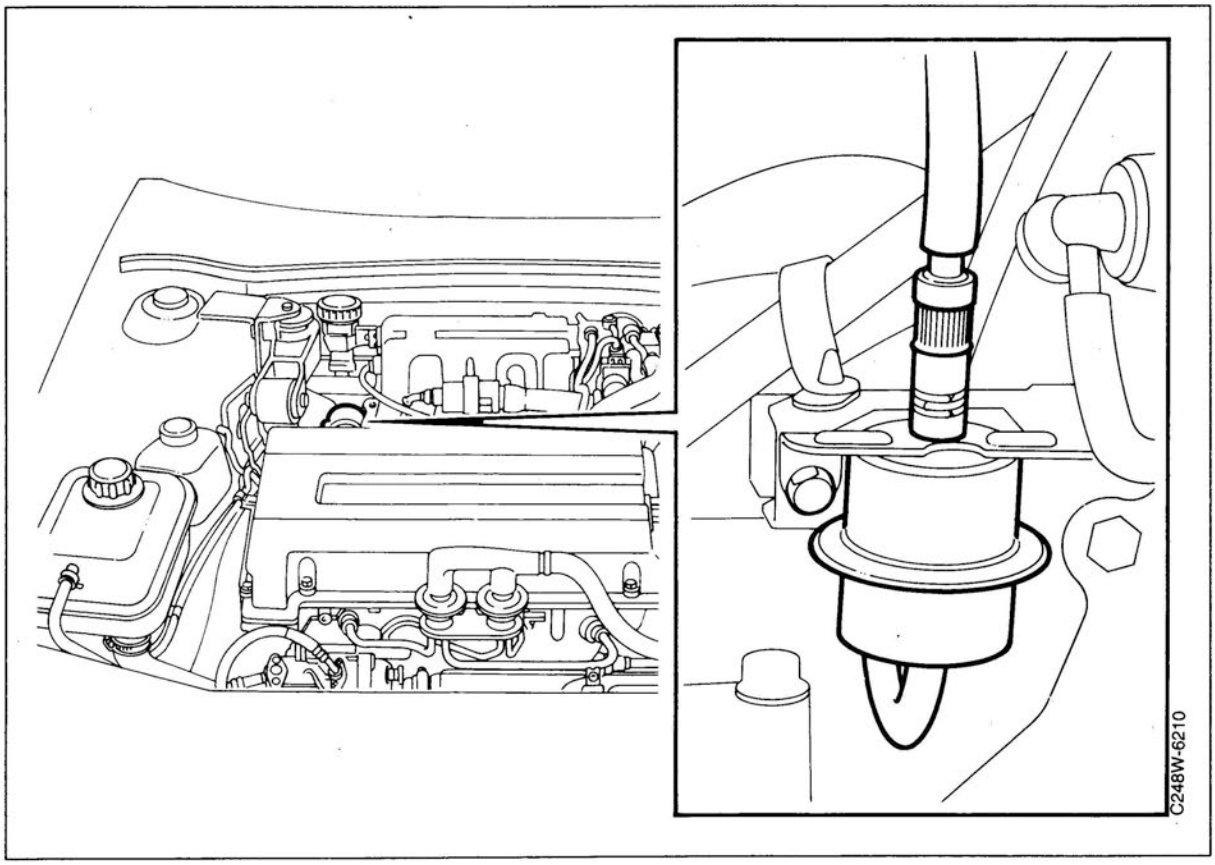

⚠ WARNING

- Work only in a well-ventilated area. If approved equipment for the extraction of fuel vapour is available, be sure to use it.
- Wear protective gloves. Prolonged contact with fuel may give rise to skin irritation or dermatitis.
- Be mindful of the danger of causing sparks, such as when making and breaking electrical circuits, short circuiting components, etc.
- No smoking anywhere in the vicinity!
- Always have a suitable fire extinguisher near at hand.

Important

When working on the fuel rail and injectors, take great care to keep everything clean.

Wash the areas round the valves, fuel rail and intake manifold and blow clean with compressed air.

Removal

1 Make sure you have some paper or the like handy to mop up the fuel.

2 Disconnect the return line.

3 Disconnect the vacuum hose from the fuel pressure regulator.

4 Undo the fuel pressure regulator and fuel rail retaining bolts.

5 Prise the regulator away from the fuel rail.

Fitting

Fit in reverse order.

Note

Lubricate the O-rings with vaseline to facilitate assembly.

Check for leaks and check the operation of the fuel pressure regulator.

Fuel pressure regulator (M1988-)

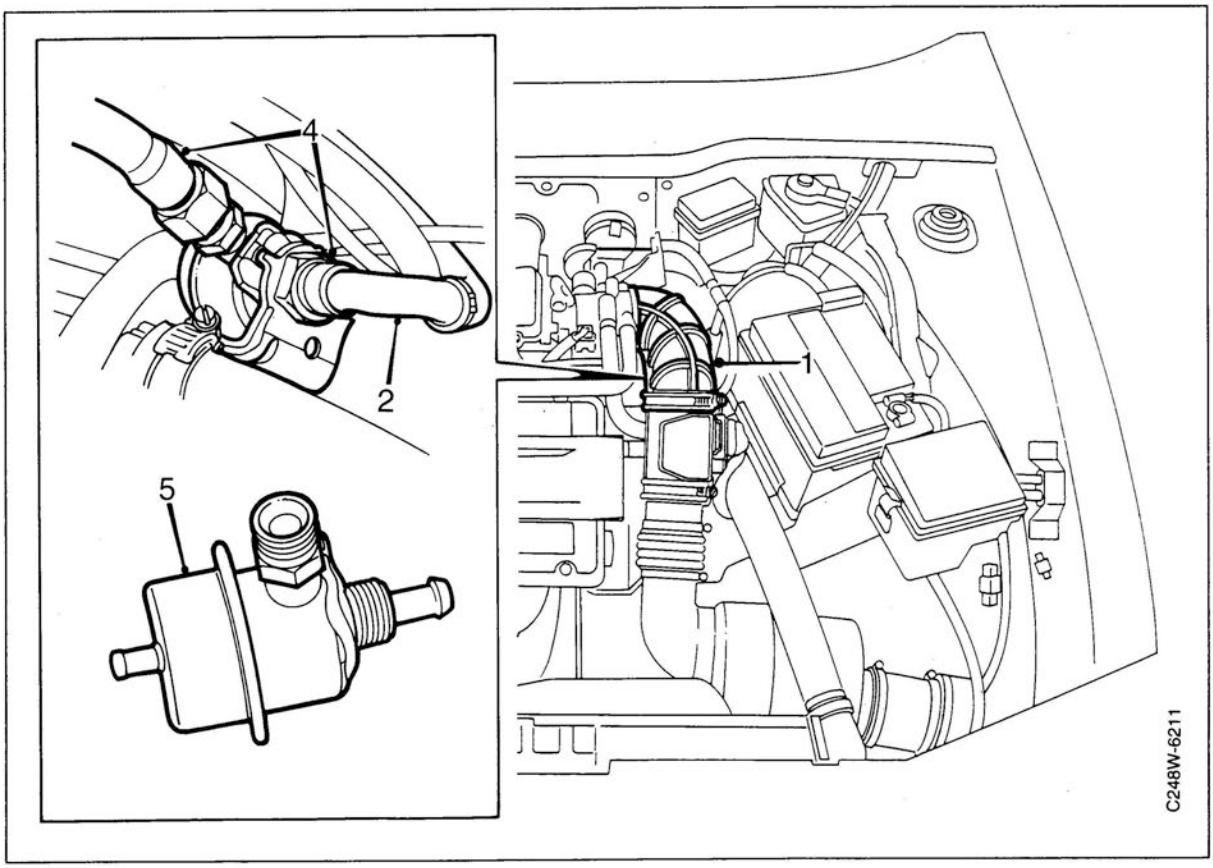

⚠ WARNING

- Work only in a well-ventilated area. If approved equipment for the extraction of fuel vapour is available, be sure to use it.
- Wear protective gloves. Prolonged contact with fuel may give rise to skin irritation or dermatitis.
- Be mindful of the danger of causing sparks, such as when making and breaking electrical circuits, short circuiting components, etc.
- No smoking anywhere in the vicinity!
- Always have a suitable fire extinguisher near at hand.

Important

When working on the fuel rail and injectors, take great care to keep everything clean.

Wash the areas round the valves, fuel rail and intake manifold and blow clean with compressed air.

Removal

1 Detach the plastic pipe/hose from the throttle body.

2 Clean the fuel hoses and disconnect the return hose.

3 Disconnect the vacuum hose.

4 Remove the hose fitted between the pressure regulator and fuel rail and remove the retaining nut.

5 Remove the regulator.

Fitting

Fit in reverse order.

Check for leaks and check the operation of the fuel pressure regulator.

Fuel pressure regulator (B234T)

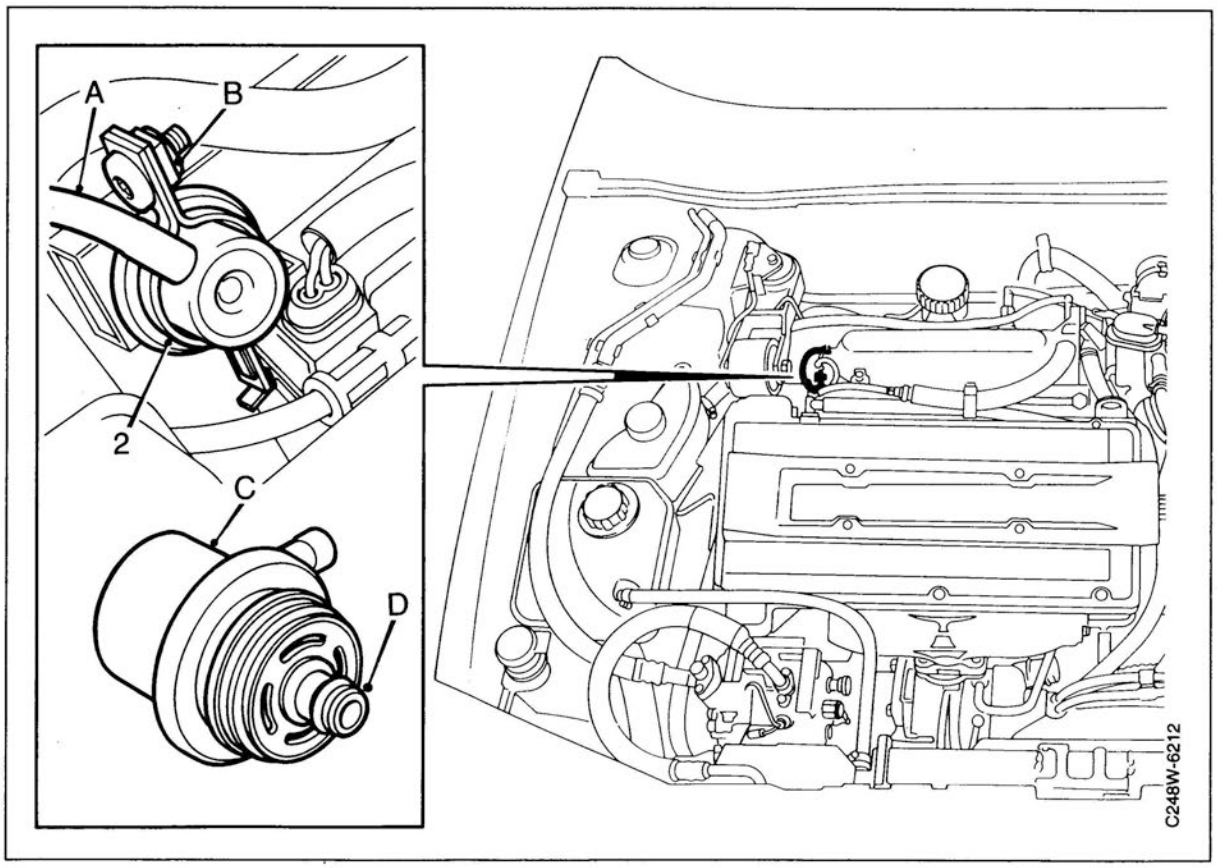

⚠ WARNING

- Work only in a well-ventilated area. If approved equipment for the extraction of fuel vapour is available, be sure to use it.
- Wear protective gloves. Prolonged contact with fuel may give rise to skin irritation or dermatitis.
- Be mindful of the danger of causing sparks, such as when making and breaking electrical circuits, short circuiting components, etc.
- No smoking anywhere in the vicinity!
- Always have a suitable fire extinguisher near at hand.

Important

When working on the fuel rail and injectors, take great care to keep everything clean.

Wash the areas round the valves, fuel rail and intake manifold and blow clean with compressed air.

Removal

1 Start by cleaning the area round the regulator and then detach the vacuum hose (A).

2 Remove the securing clip (B).

3 Remove the regulator using a screwdriver (C).

Fitting

1 Inspect (and perhaps change) the O-rings. Lubricate the O-rings sparingly with vaseline and fit the regulator (D).

2 Fit the securing clip (B).

3 Connect the vacuum hose (A).

4 Check for leaks and check the operation of the fuel pressure regulator.

Throttle position switch (2.2, 2.4, 2.4.1)

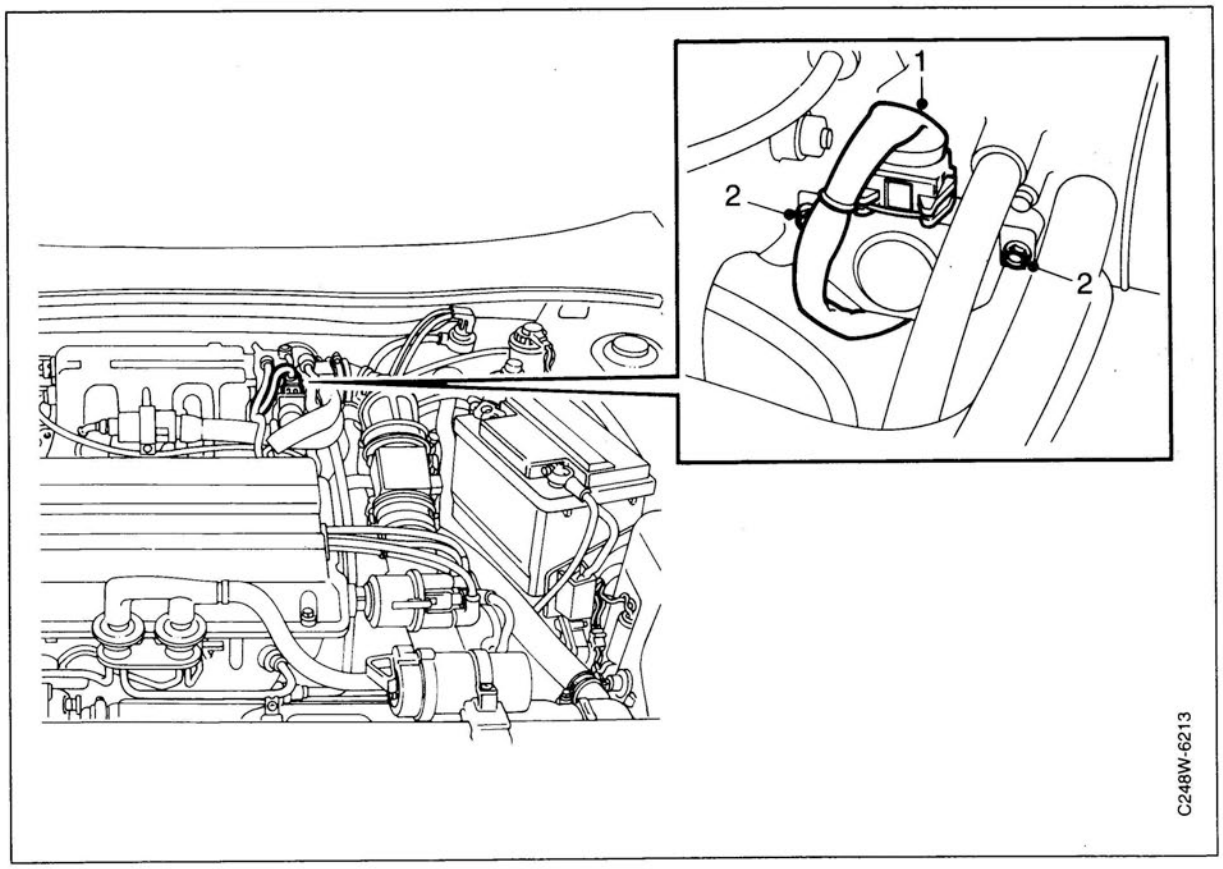

Removal

1 Unplug the throttle position switch connector.

2 Remove the retaining bolts and lift out the throttle position switch.

Fitting

Fit the throttle position switch in reverse order.

Adjust the switch until it is correctly positioned. It should be closed in the closed throttle position. Tighten the bolts.

Check the setting. When the throttle butterfly leaves the closed throttle position a clicking sound should be heard from the switch.

Throttle position sensor (not ETS)

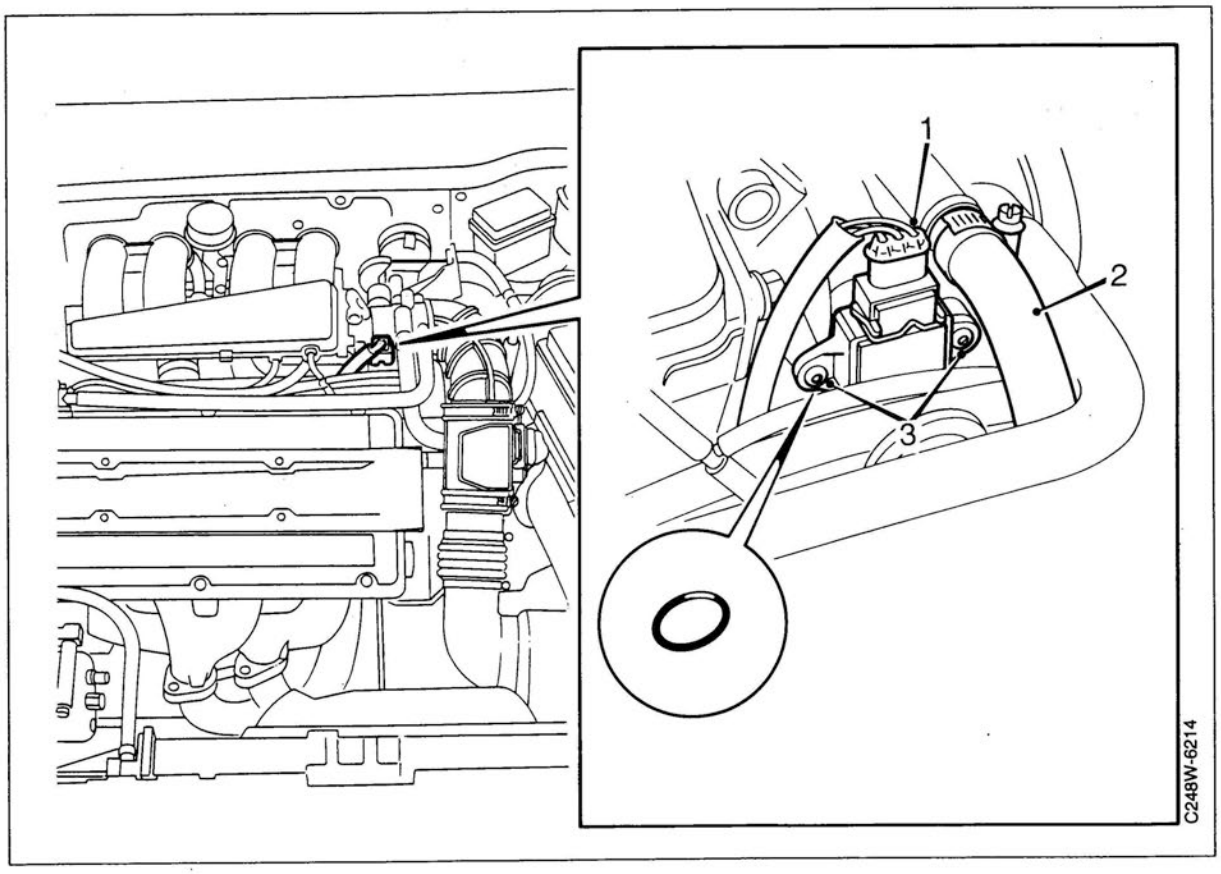

Removal

1 Unplug the connector from the position sensor.

2 Disconnect the thick crankcase ventilation hose from the throttle body.

3 Undo the bolts securing the position sensor and remove the sensor.

Fitting

Check that the O-ring is correctly positioned and fit the sensor on the throttle spindle.

Connect the thick crankcase ventilation hose.

Plug in the connector.

Throttle body (not ETS)

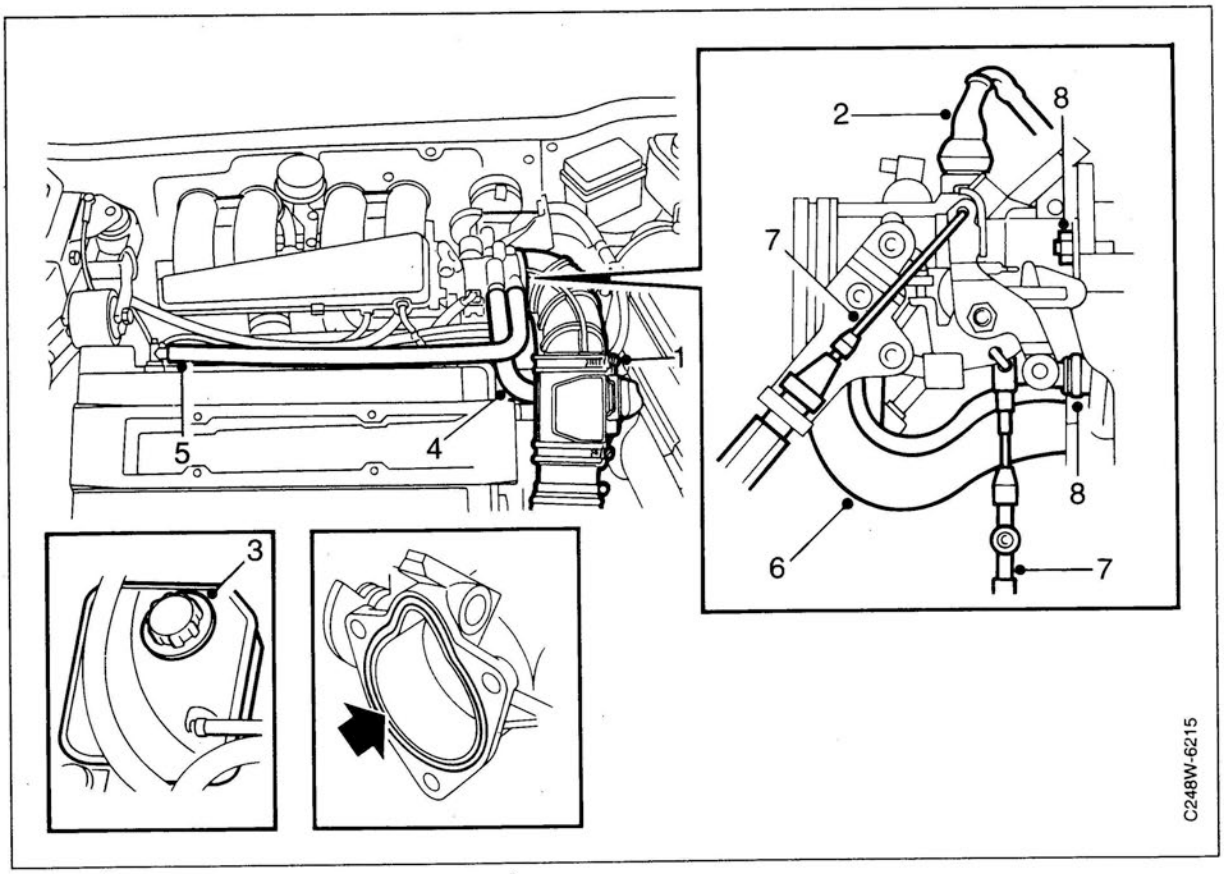

Removal

1 Remove the hose before the throttle body.

2 Unplug the throttle position sensor connector.

3 Open the expansion tank cap and release the pressure in the cooling system. Screw the cap back on again.

4 Detach the hoses for throttle body preheating and plug them.

5 Detach the crankcase ventilation hose.

6 Remove the idle air control valve hose and the vacuum hoses from the throttle body.

7 Detach the throttle cable from the throttle lever. Cars with automatic transmission: also detach the kick-down wire.

8 Remove the throttle body retaining bolts and lift out the throttle body.

Throttle body (not ETS)

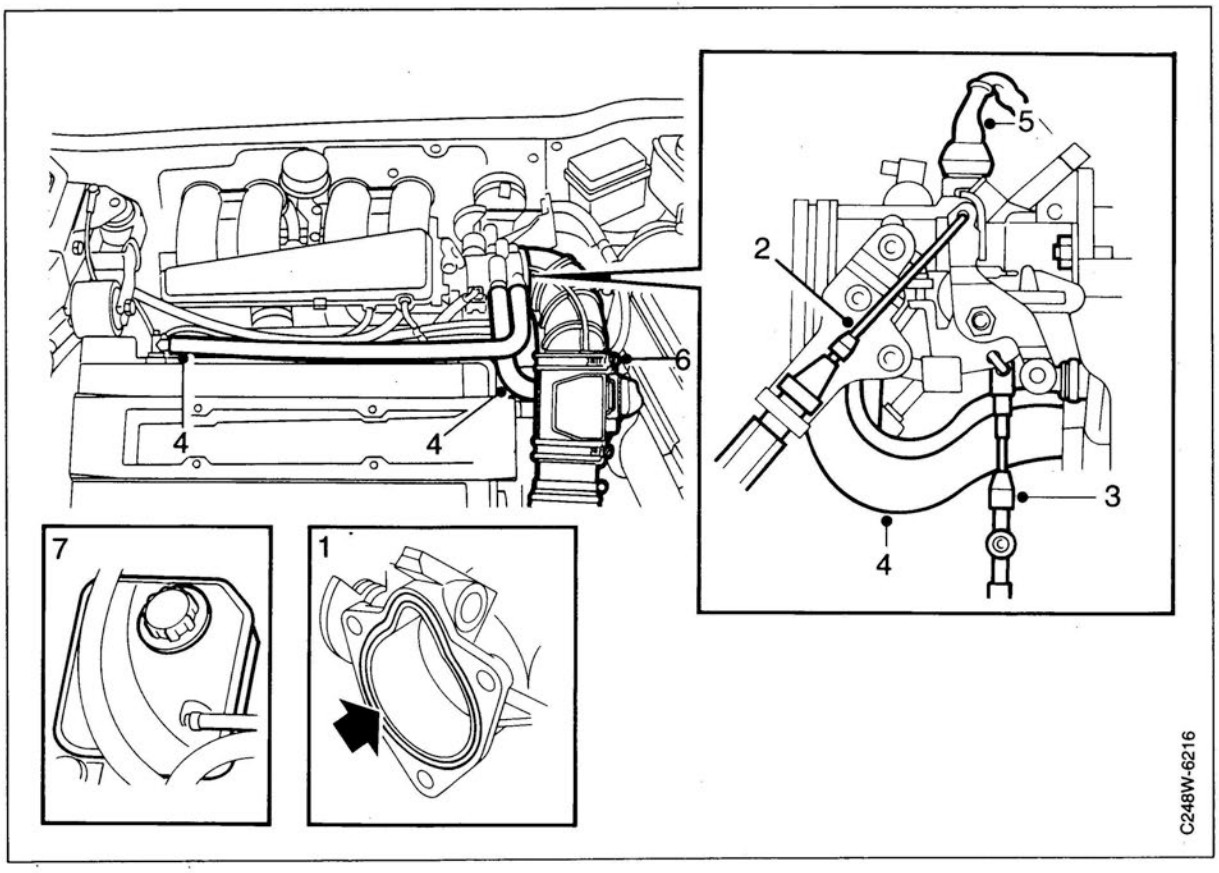

Fitting

Important

Note the position of the O-rings in the throttle body.

1 Inspect the mating surfaces and O-ring.
Fit the throttle body.

2 Connect the throttle cable.
Cars with automatic transmission: also connect the kick-down wire.

3 **Only cars with automatic transmission:**
Check and adjust the kick-down wire, see page 241.

4 Connect the crankcase ventilation, idle air control valve and throttle body preheater hoses.

5 Plug in the throttle position sensor connector.

6 Fit the hose between the throttle body and mass air flow sensor.

7 Check the coolant level and top up as necessary.

Auxiliary air valve

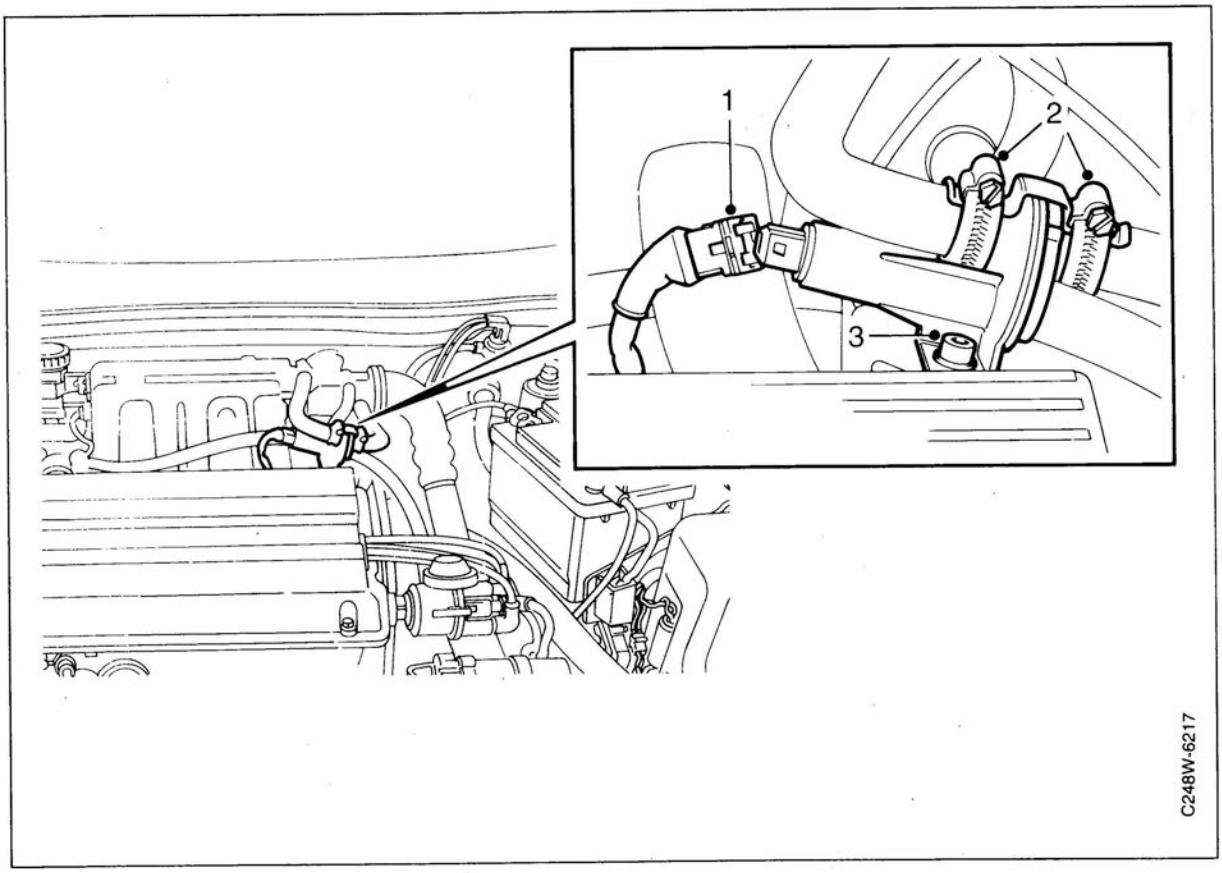

Removal

1 Unplug the connector.
2 Undo the hose clips at the fittings and pull off the hoses.
3 Unscrew the auxiliary air valve.

Fitting

Fit in reverse order.

Tightening torque: 8 Nm (6 lbf ft)

Throttle damper (dashpot)

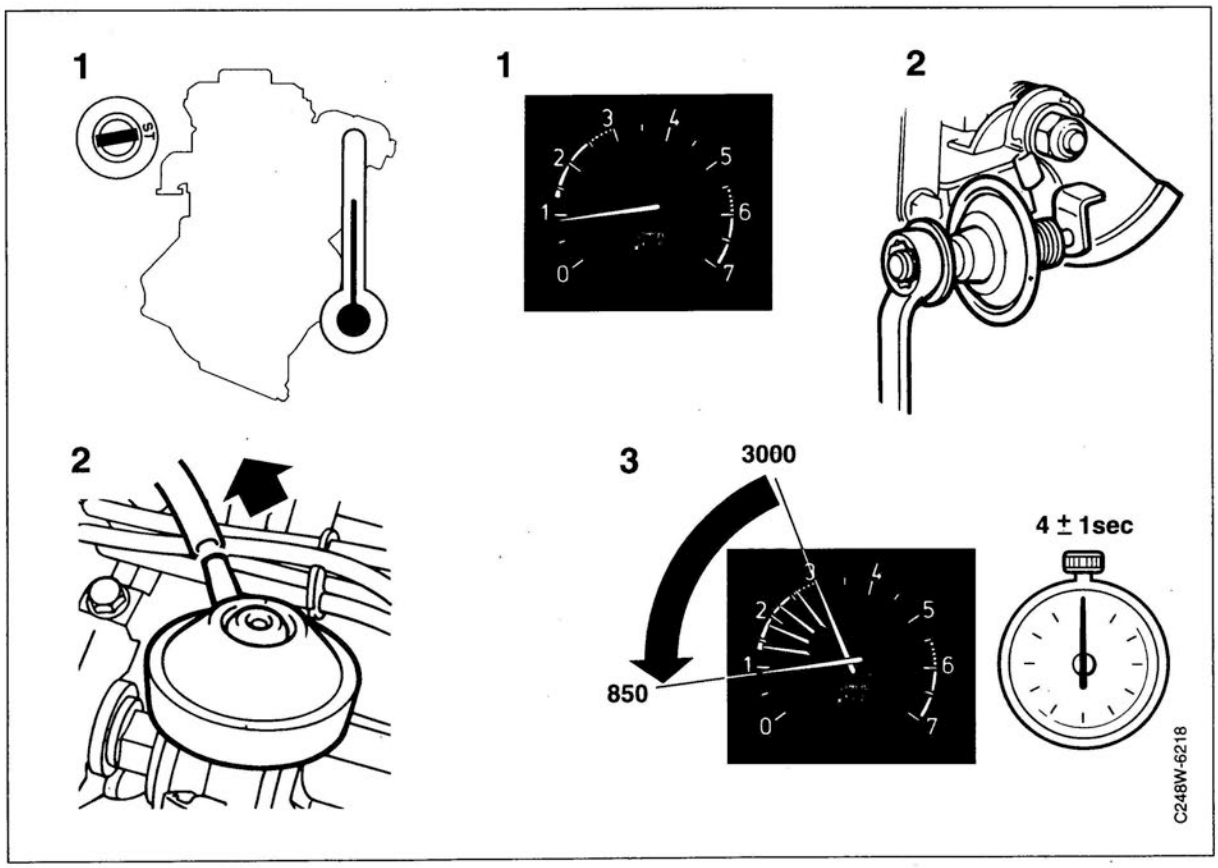

Checking and setting

To change retardation time, slacken the throttle damper's locknut and screw the damper **away from** the stop on the throttle lever (shorter retardation time) or **towards** the stop (longer retardation time).

1 Warm up the engine and check that the CO content and ignition timing are correctly adjusted.

2 Connect a tachometer and adjust the idling speed.

3 Rev up the engine to 3,000 rpm and, using a stopwatch, check that it returns to idling speed in 4 ± 1 seconds.

Idle air control valve (B202)

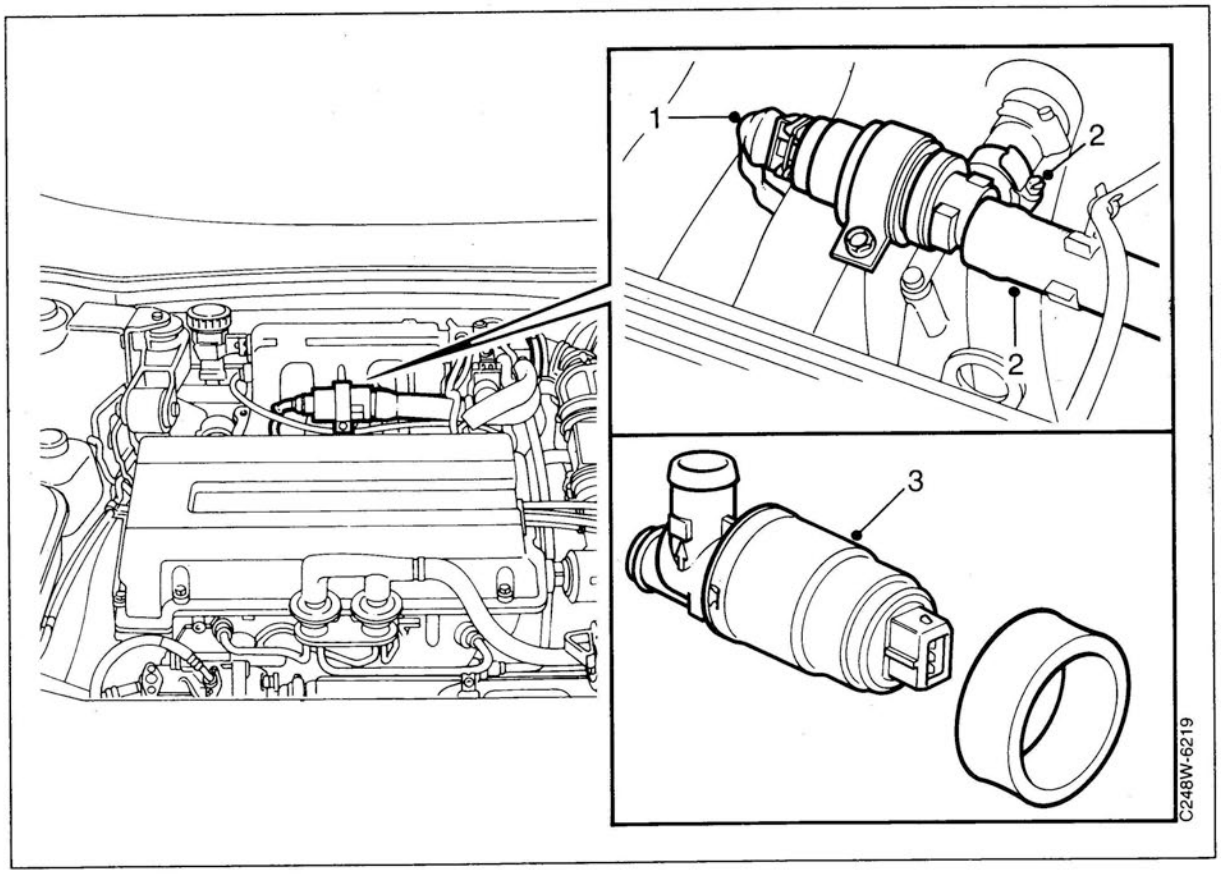

Removal

1 Unplug the connector.
2 Undo the hose clips and remove the hoses.
3 Undo the valve's retaining bolts and remove the valve from the holder in a downward direction.

Fitting

Fit in reverse order.
For idling speed adjustment, see page 228 or 229.

Idle air control valve (B234i)

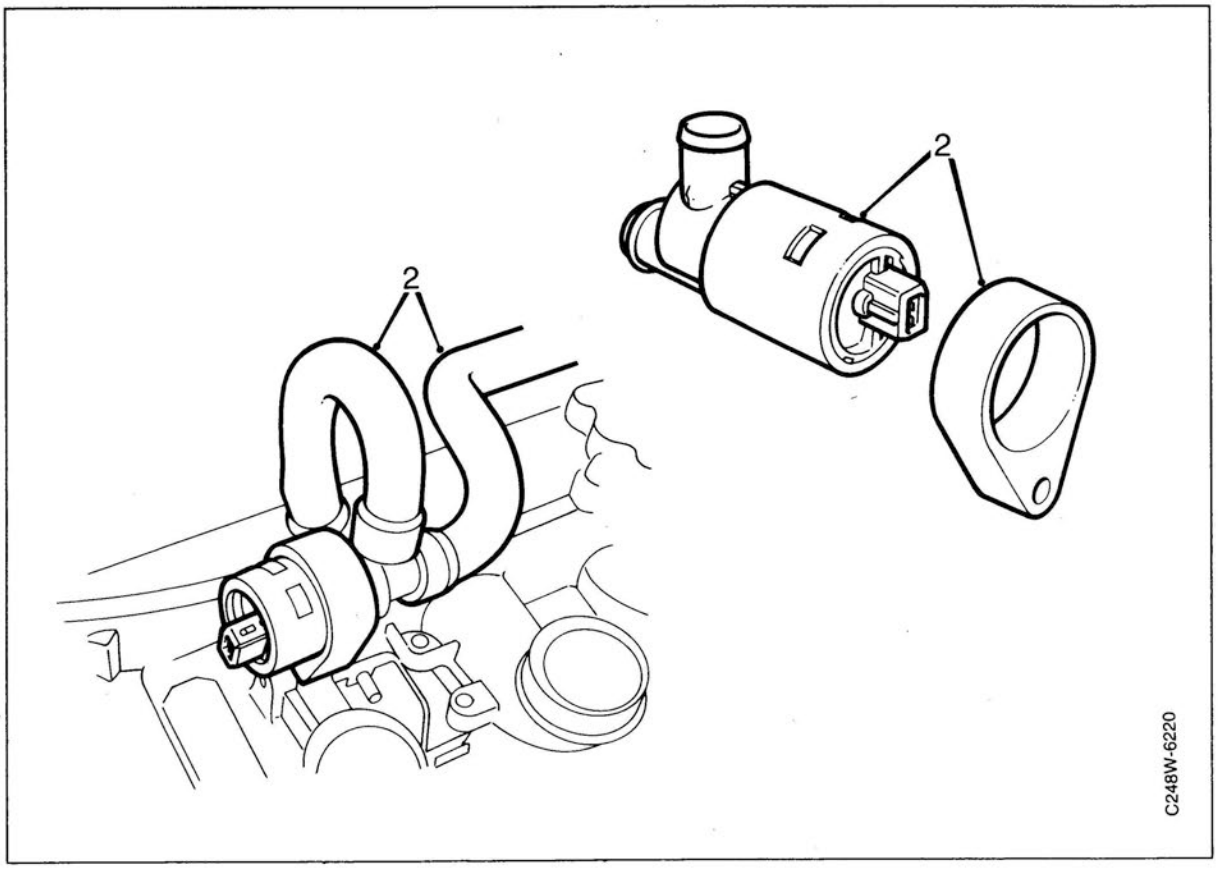

Removal

1 Remove the upper half of the intake manifold, see page 194.

2 Remove the idle air control valve and detach the hoses.

Fitting

Fit in reverse order.

Drive the car on test for adaptation of the control module.

Idle air control valve (B234T)

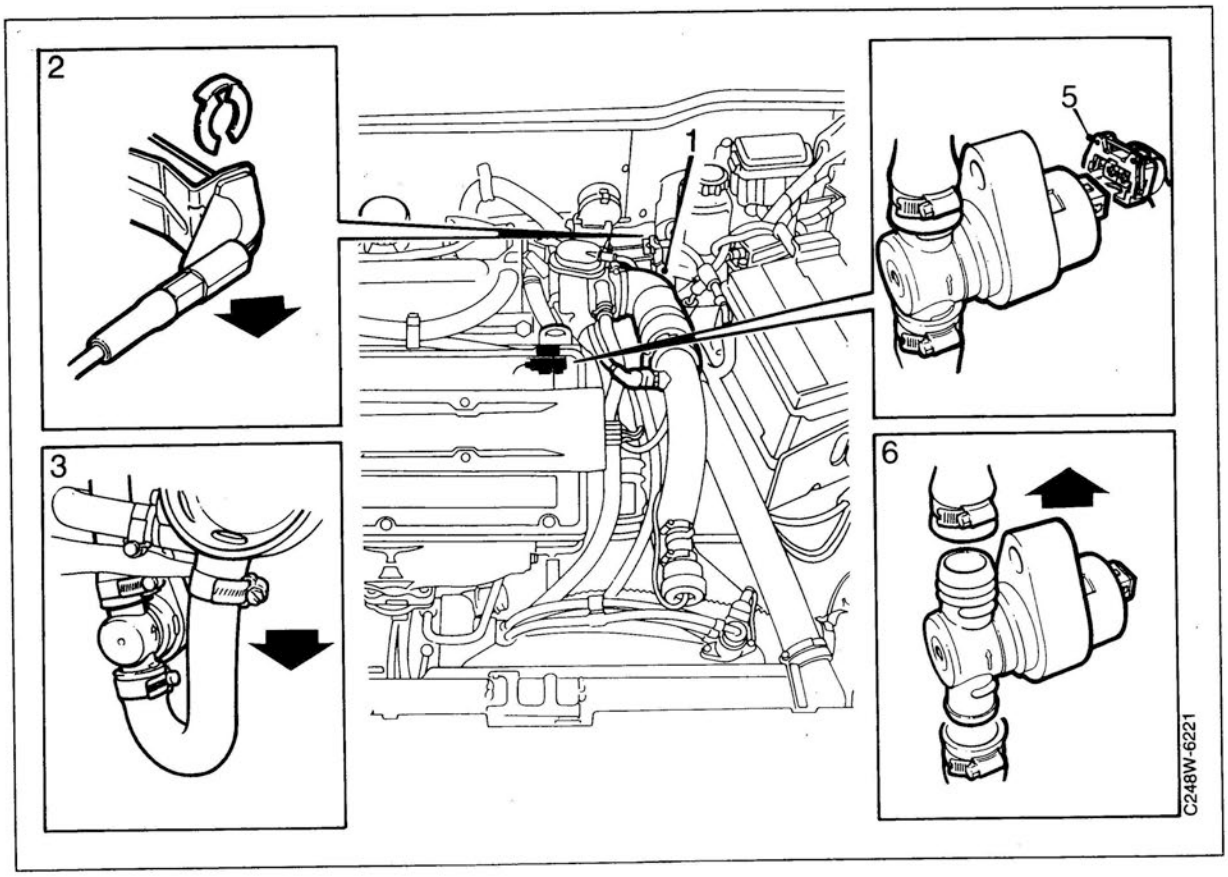

Removal

1 Remove the throttle body hose.
2 Remove the clip and bend the throttle cable casing aside.
3 Remove the idle air control valve hoses from the throttle body.
4 Pull the valve off the bracket and withdraw the hoses.
5 Unplug the valve's connector.
6 Lift out the valve and remove the two hoses.

Fitting

Fit in reverse order.

Drive the car on test for adaptation of the control module.

Important

Do not tighten any of the four hose clips until the valve has been fitted and is correctly positioned.

Adjustment of idling speed, M1985 (without idle air control valve)

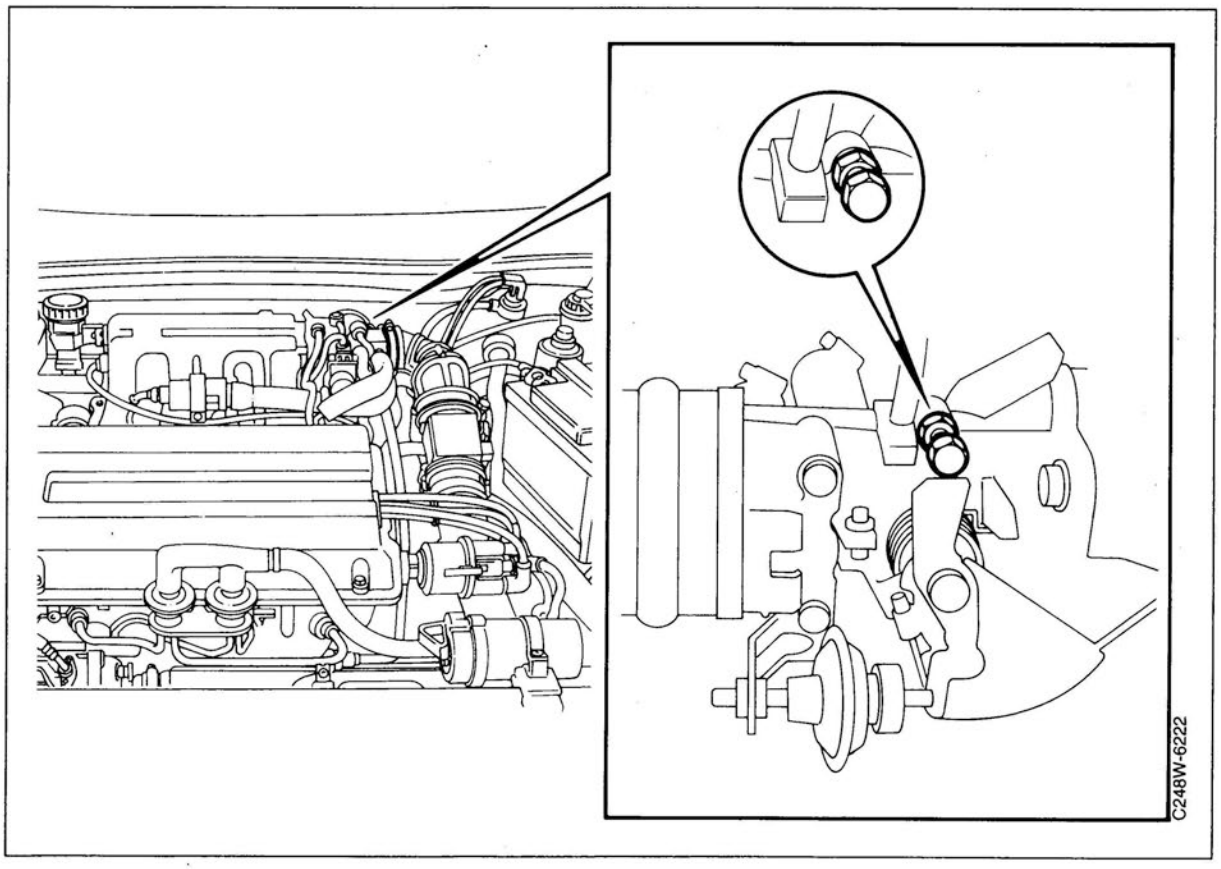

Idling speed adjustment is carried out by turning the adjusting screw on the throttle body bypass passage. This adjustment should be carried out in conjunction with setting the CO content.

Idling speed: 875 ± 75 rpm.

Important

The engine should be at normal running temperature.

If idling speed cannot be adjusted, carry out basic throttle setting, see page 236.

Adjustment of idling speed (LH 2.2 with idle air control valve)

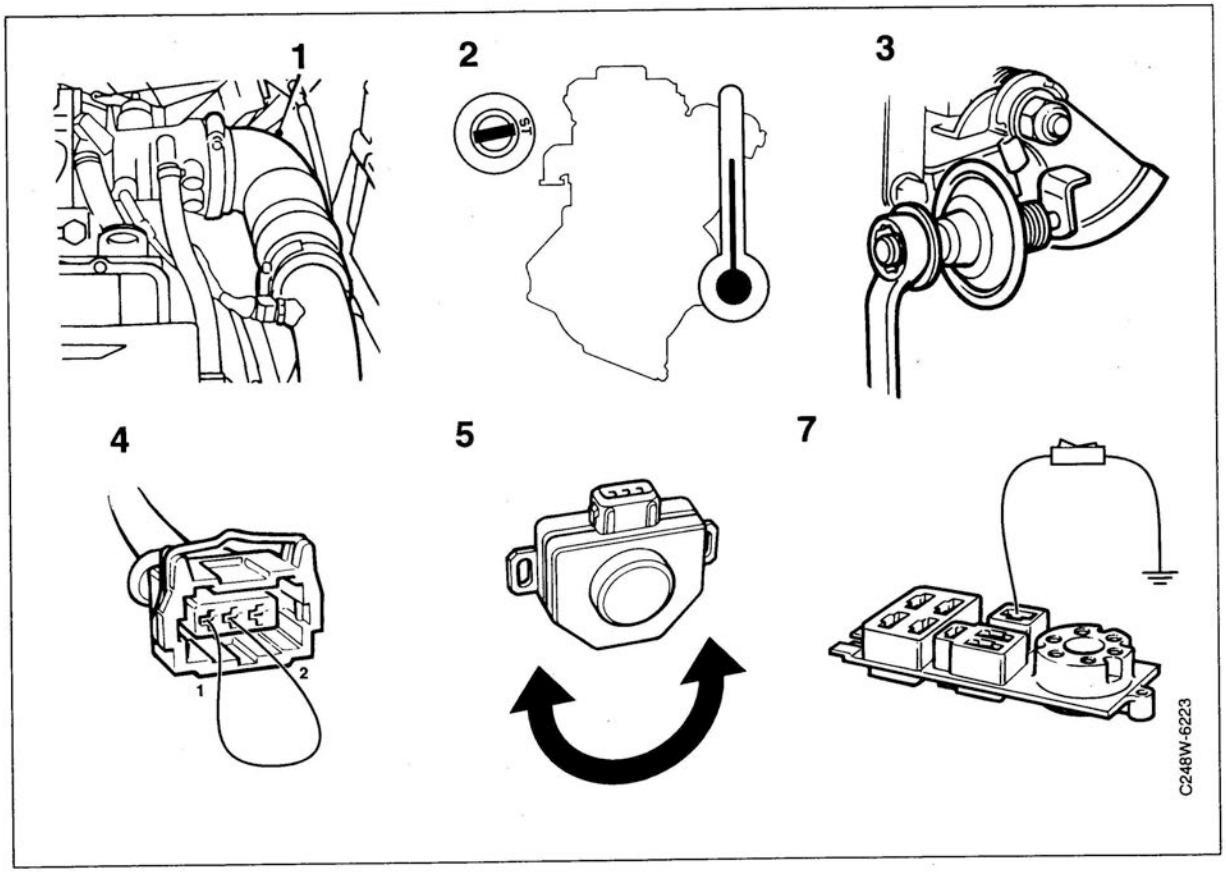

1 Remove the hose from the throttle body, open the throttle fully and wash the area round the throttle butterfly.

2 Start the engine and warm it up. It is important for the gearbox oil to be warm.

3 Slacken and adjust the throttle damper so that the throttle lever is not activated.

4 Unplug the throttle position switch connector and connect pins 1 and 2 together (simulating a closed throttle position switch, which is important when adjusting the idling speed).

5 Remove the two throttle position switch retaining bolts and rotate the switch so that the throttle will not be activated. Check that the throttle cable is slack and cannot activate the throttle.

6 Start the engine and run it at idling speed. Make sure that no other loads are engaged, such as Drive, A/C, radiator fan, etc. Adjustment must not be carried out when the radiator fan is turned on.

7 Connect cable 83 93 886 with switch between the test socket on the left-hand side of the engine bay and battery negative. Set the switch to ON.

Adjustment of idling speed (LH 2.2 with idle air control valve), contd.

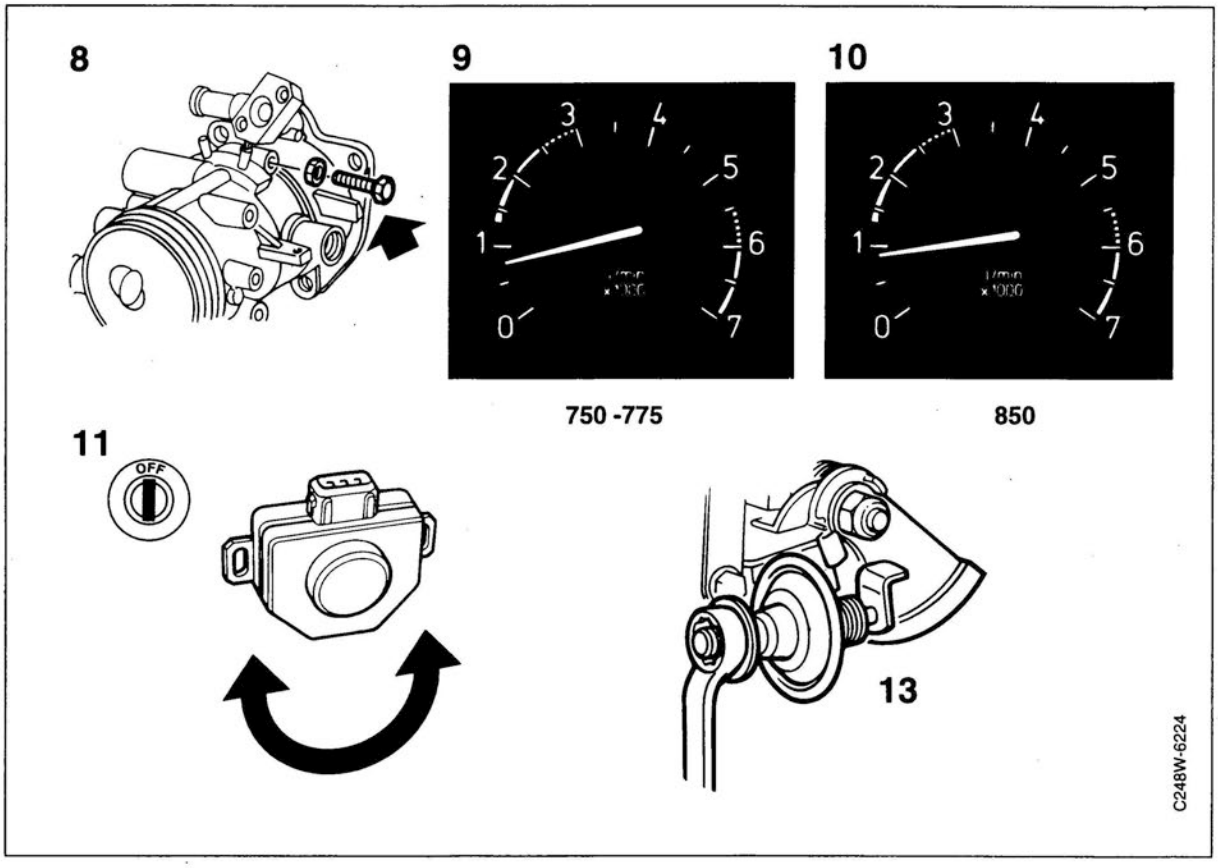

8 **Cars with idle speed adjusting screw**
Screw in the idle speed adjusting screw fully and tighten the locknut.

9 Slacken the throttle adjusting screw's locknut, using spanner 83 94 322, and adjust idling speed to 750-775 rpm. Then lock the adjusting screw with the nut.

10 Set the switch in cable 83 93 886 to OFF. Check that idling speed is stabilized at 850 ± 75 rpm.

11 Switch off the engine and adjust the throttle position switch so that a click is heard when the throttle is rotated away from the closed throttle position. Do not confuse this sound with the click made by the shift-up switch.

12 Screw the throttle position switch in place. Remove the jumper lead and plug in the position switch.

13 Adjust the throttle damper so that it closes the throttle within 4 ± 1 second. Tighten the locknut.

14 Remove the wiring.

Mass air flow sensor (fuel injection engines)

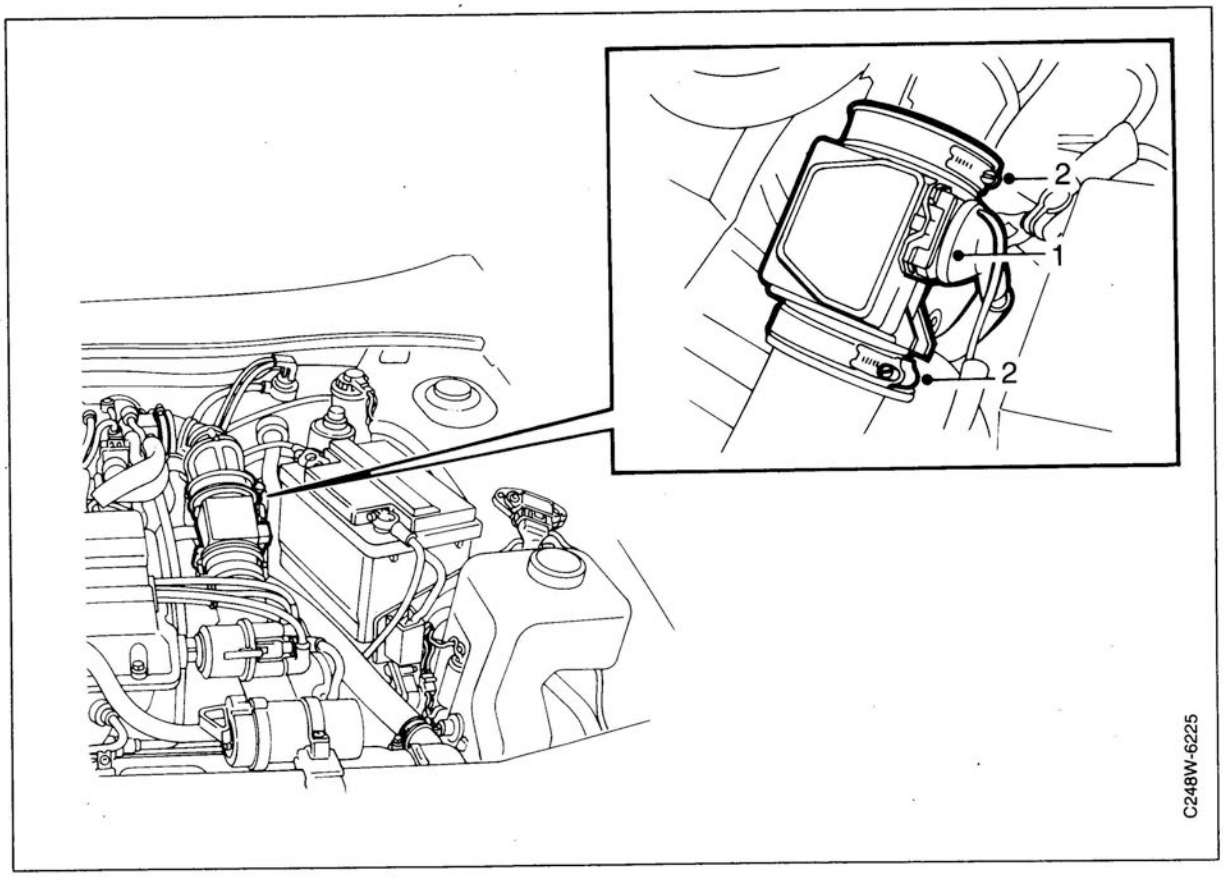

Removal

1 Unplug the connector.

2 Undo the hose clips and remove the mass air flow sensor.

Fitting

Fit in reverse order.

Important

A mass air flow sensor of plastic must never be replaced by a mass air flow sensor of aluminium. If this is done, the LH control module will be ruined.

Mass air flow sensor (Turbo engines)

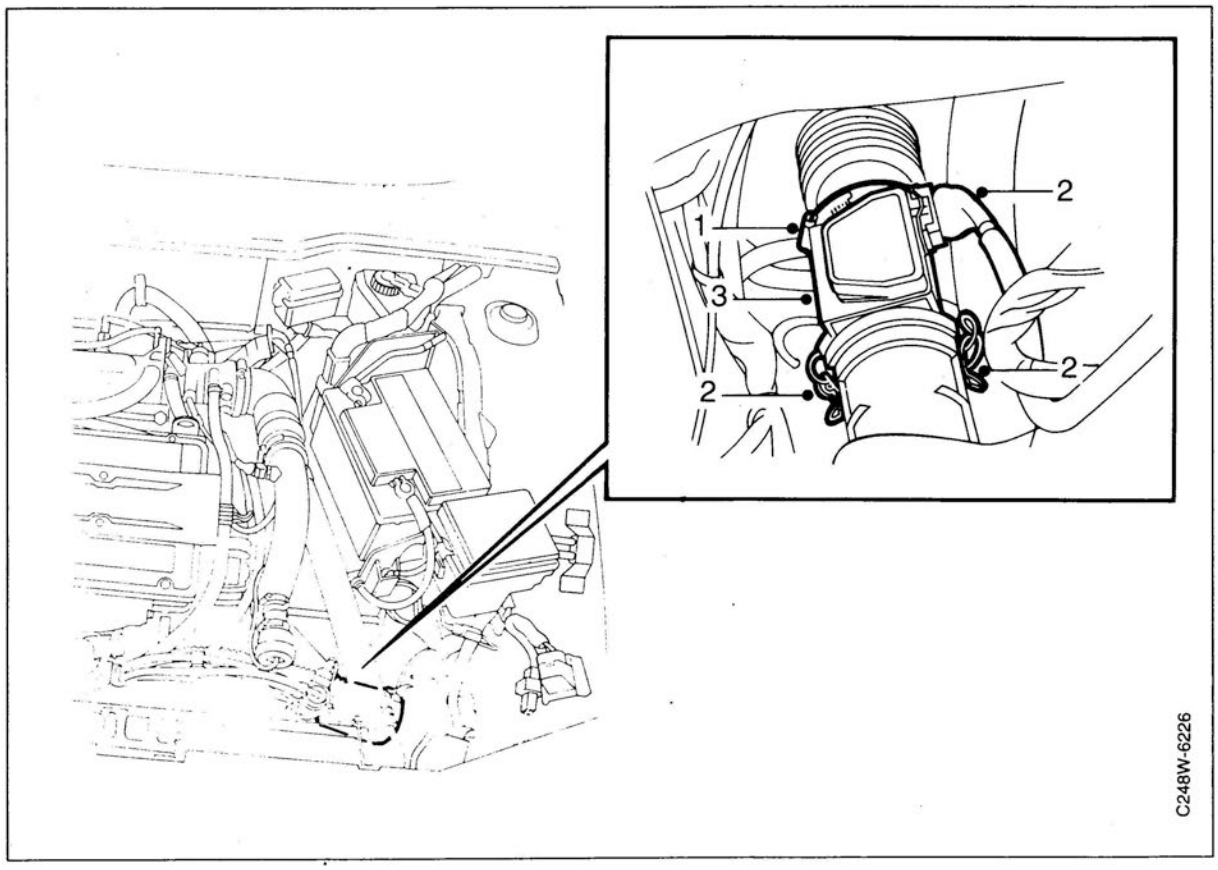

Removal

1 Undo the hose clip securing the rubber gaiter to the mass air flow sensor.

2 Unplug the connector and release the two toggle clips securing the cover of the filter holder.

3 Withdraw the mass air flow sensor from the cover and rubber gaiter.

Fitting

Fit the new mass air flow sensor. Make sure that the O-ring is correctly located on the flange. Turn it so that the groove in the mass air flow sensor coincides with the notch in the cover.

Fit the rubber gaiter on the mass air flow sensor. Tighten the hose clip.

Plug in the connector.

Checking and adjusting the pulse ratio (LH 2.2 with catalytic converter)

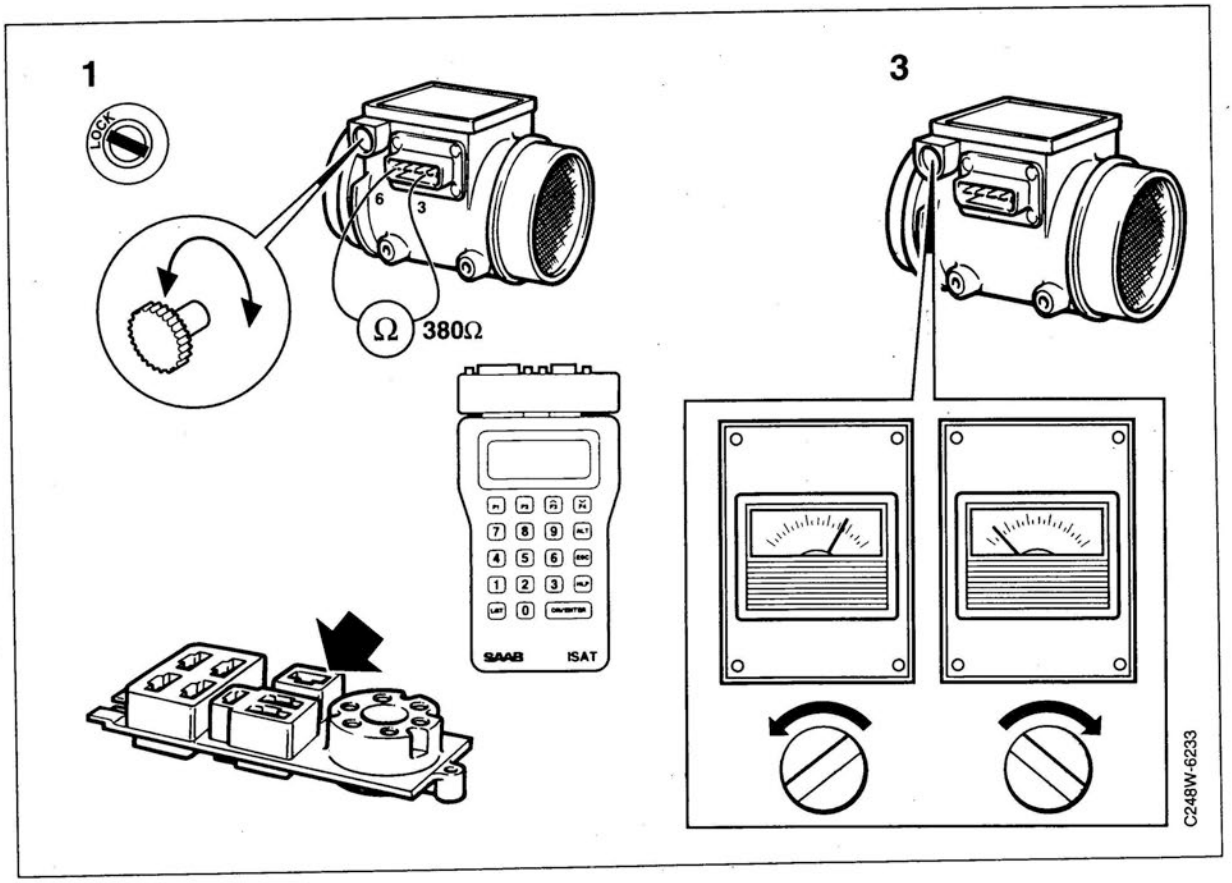

This adjustment provides a reference point for the LH system and does not affect drivability.

Calibration should only be carried out when engine performance has changed as the result of major work carried out on it.

1 Connect pulse meter 83 97 597 to the test point in the TSI socket, located in the engine bay on the left-hand side. Use adapter cable 83 94 132. **Alternatively, an ISAT scan tool can be used in conjunction with test cable 86 10 784.**

2 Start the engine and warm it up. When the basic setting is correct, the pointer needle will oscillate for an equally long time at both ends of the scale.

Note

The pointer needle will move slowly and may occasionally stop. It moves much more slowly than when testing the CI system.

3 If adjustment proves necessary, turn the adjusting screw as follows:

a. If the pointer needle stops at full scale deflection or remains most of the time in the right-hand portion of the scale, turn the screw anticlockwise until the it remains an equally long time at both ends of the scale.

b. If the pointer needle remains in the low end of the scale, turn the screw clockwise until it spends an equally long time at both ends of the scale.

Checking and adjusting the pulse ratio (LH 2.2 with catalytic converter), contd.

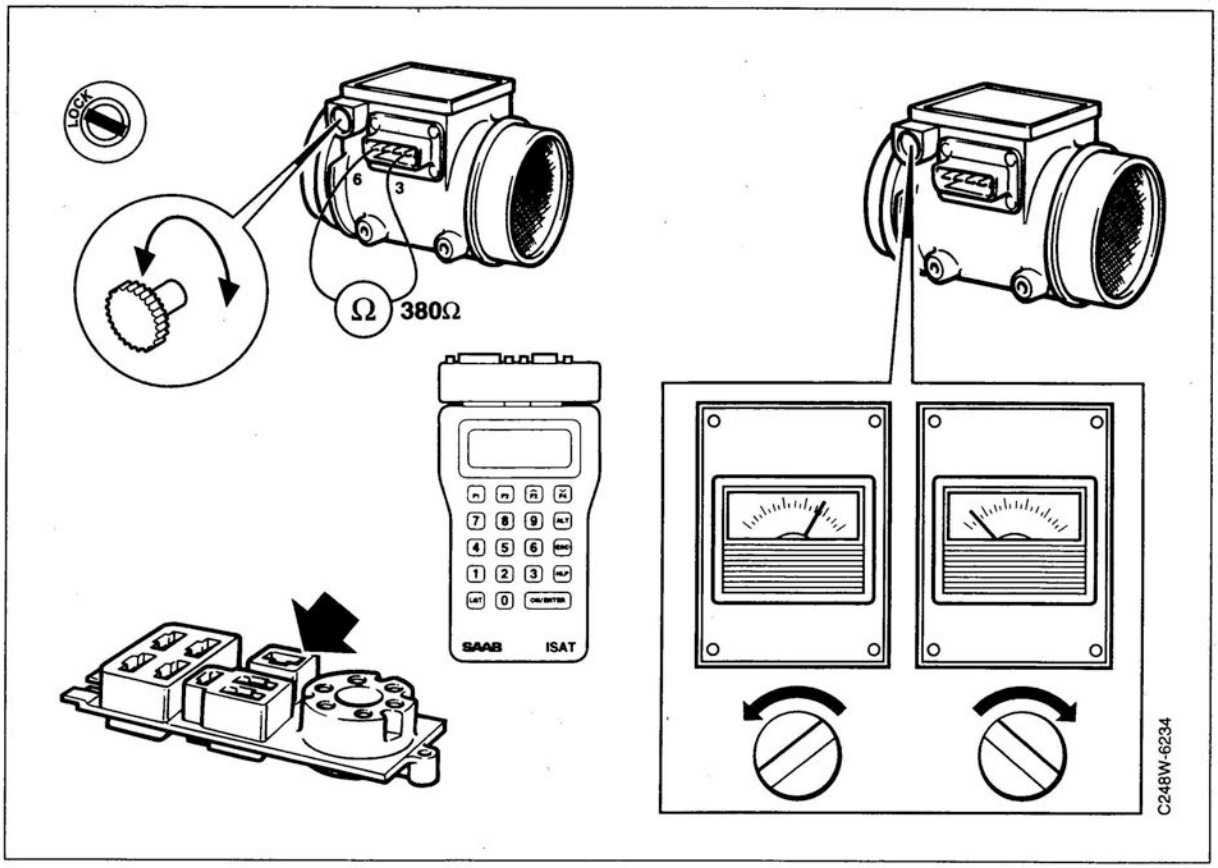

4 If the pulse ratio is above 6% and cannot be adjusted, switch off the engine, unplug the mass air flow sensor connector and connect a multimeter to mass air flow sensor pins:
   3 and 6 (-M1987 fuel injection engine, -M1988 turbo engine)
   2 and 6 (M1988- fuel injection engine, M1989- turbo engine)

   Turn the adjusting screw until 380 ohms is obtained.
   If this reading cannot be obtained, change the mass air flow sensor.
   When the right reading (380 ohms) is obtained, plug in the mass air flow sensor connector.
   Start the engine and warm it up.
   Check and adjust additionally until the correct pulse ratio is obtained. If the pulse ratio still cannot be adjusted, check the mass air flow sensor wiring and electrical connections.

Checking and adjusting the CO content (LH 2.2 and 2.4.2 for cars without a catalytic converter)

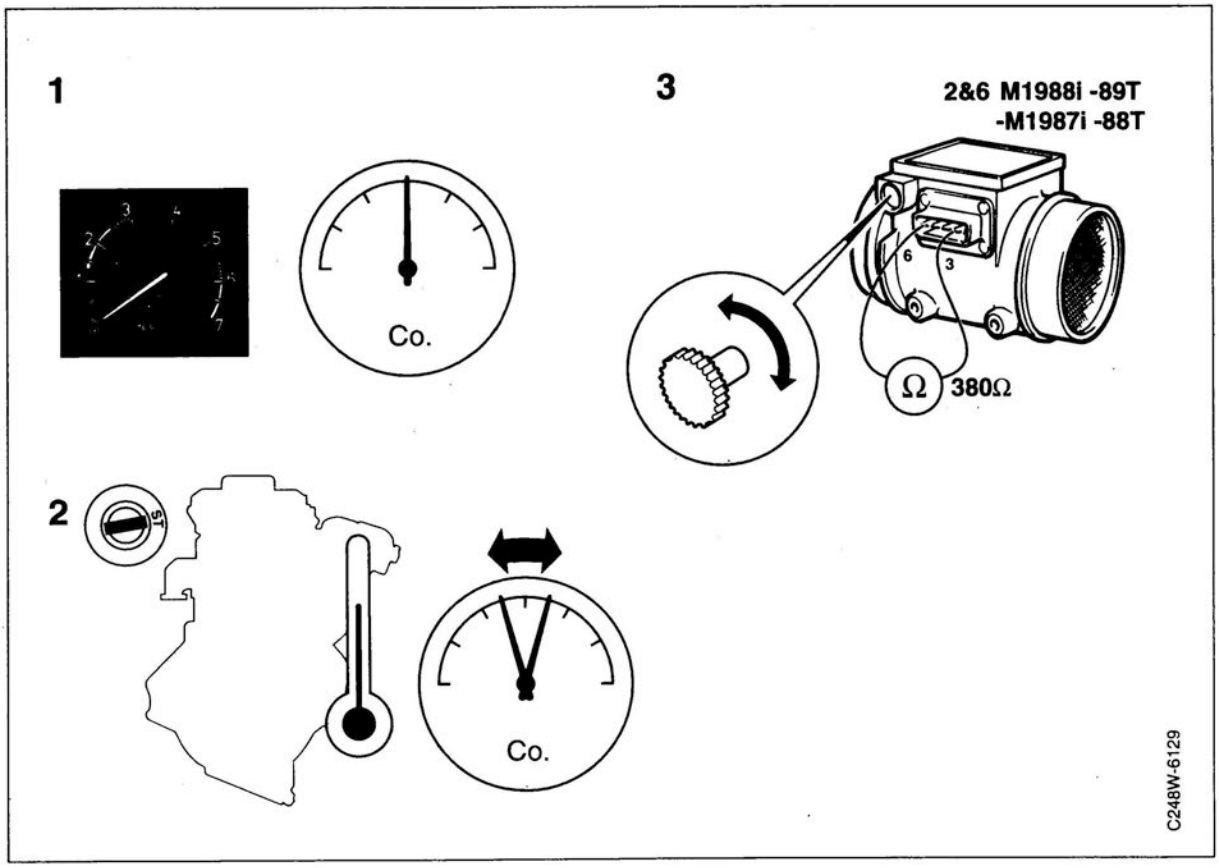

Tools:
- CO meter
- Exhaust extractor
- Tachometer

1 Connect the CO meter, exhaust extractor and tachometer.

2 Start the engine and warm it up. Check the CO content against the table.

Engine	Model year	CO %
B202 Turbo	1985-	1.3 ± 0.3
B202i	1986-	1.0 ± 0.5
B234i	1991-	1.0 ± 0.5

Cars with the Pulse-air system: detach and plug the hose connected to the air cleaner.
If the readings obtained are not OK, turn the adjusting screw:
Reading too low - clockwise
Reading too high - anticlockwise

3 If the CO content is above 6% and cannot be adjusted, switch off the engine, unplug the mass air flow sensor connector and connect a multimeter to mass air flow sensor pins:
3 and 6 (-M1987 fuel injection engine, -M1988 turbo engine)
2 and 6 (M1988- fuel injection engine, M1989- turbo engine)
Turn the adjusting screw until 380 ohms is obtained.
If this reading cannot be obtained, change the mass air flow sensor.
When the right reading (380 ohms) is obtained, plug in the mass air flow sensor connector.
Start the engine and warm it up.
Check and adjust additionaly until the correct CO reading is obtained. If the CO content still cannot be adjusted, check the mass air flow sensor wiring and electrical connections.

4 If the wiring is OK and the CO content still cannot be adjusted, try fitting a new LH control module.

Basic throttle setting (not ETS)

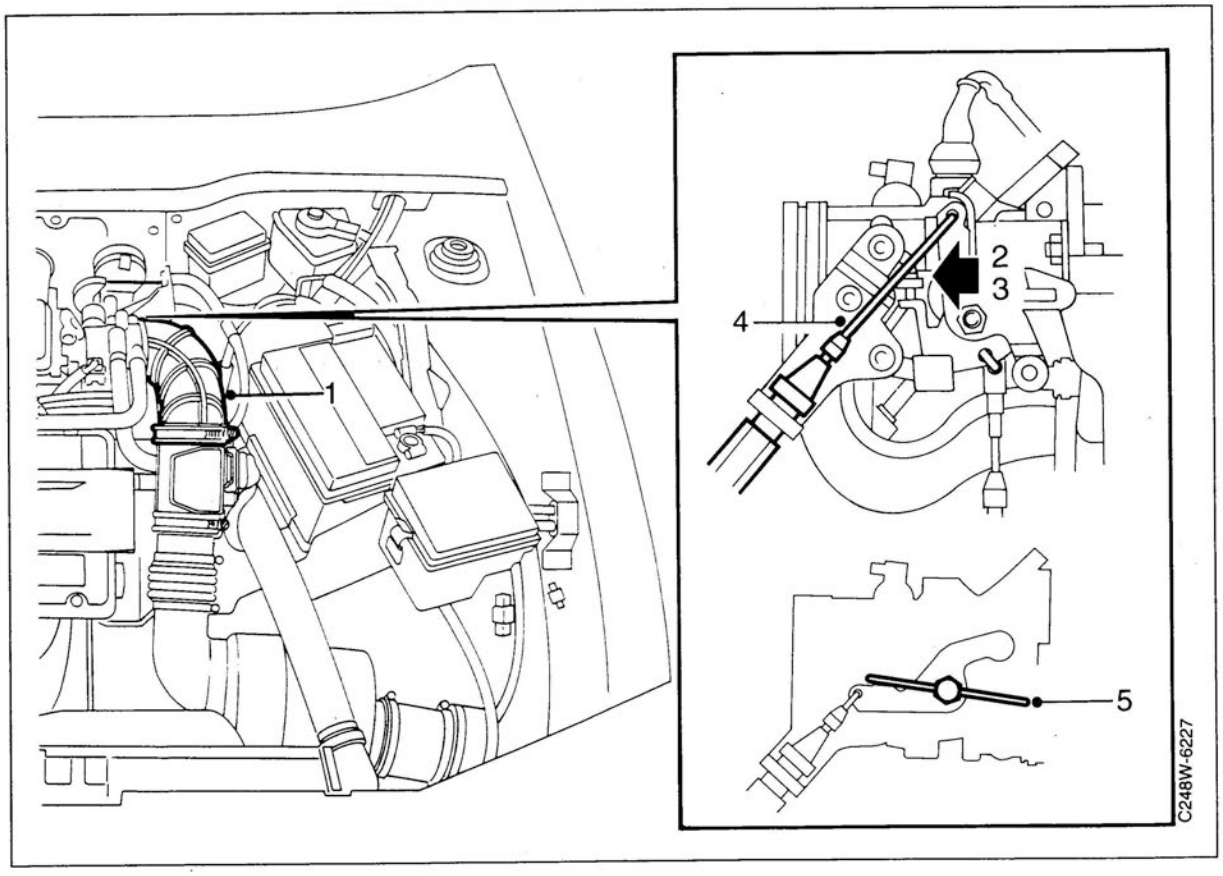

1 Remove the hose.
2 Slightly back off the bolts securing the throttle position switch.
3 Turn the adjusting screw to a position where it touches the stop (throttle fully closed)
4 Screw in the adjusting screw about another 1/3 turn and secure it with the locknut. This will give a clearance of 0.05 mm (0.002 in) between the throttle butterfly and throttle body.
5 Check that the length of the throttle cable does not prevent the butterfly from reaching the closed throttle position and that there is no free play at the accelerator.
6 Check that the throttle opens fully when the accelerator is in the wide open throttle position.
7 Adjust the throttle position switch. It should be closed in the idle speed position. Tighten the bolts. When the throttle leaves the idle speed position a clicking sound should be heard from the switch.

Coolant temperature sensor

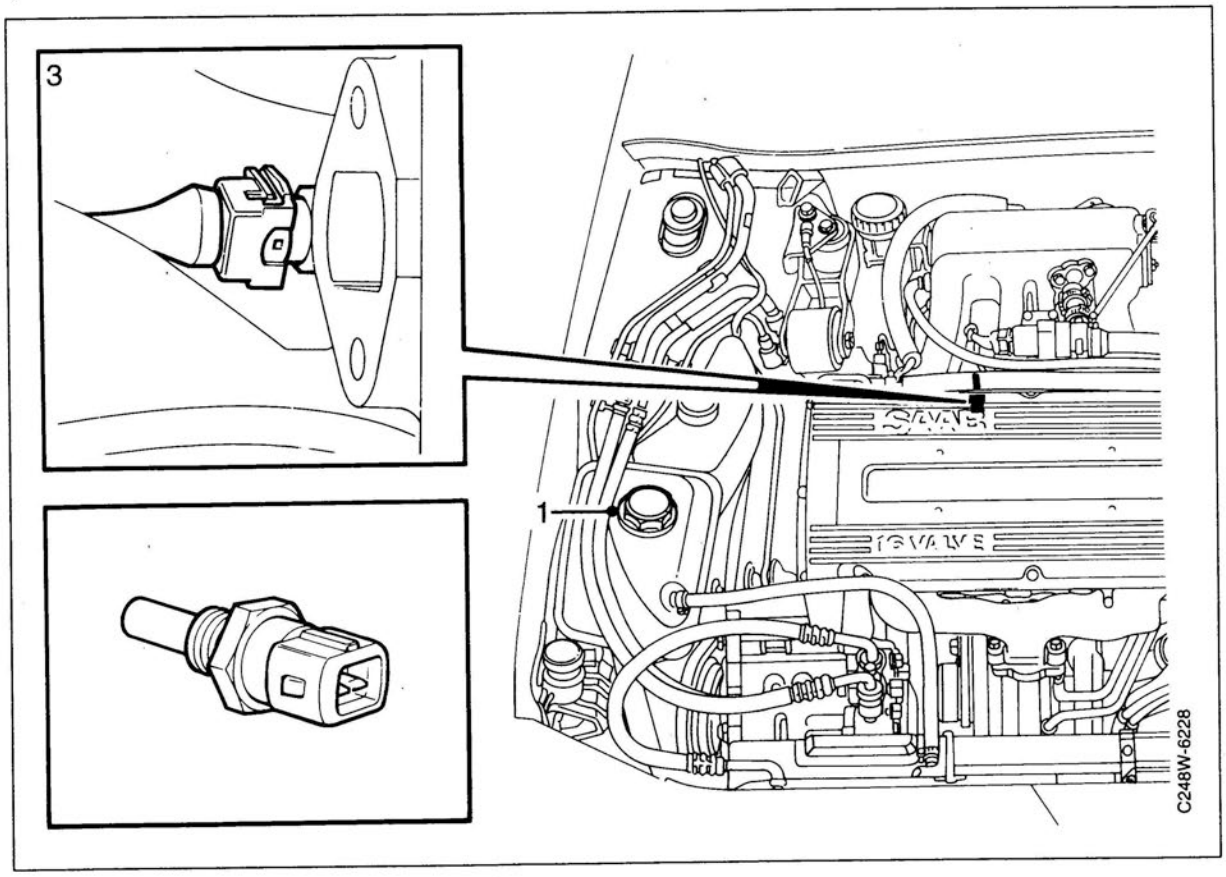

> ⚠ **WARNING**
>
> Be careful when opening the expansion tank cap. Hot coolant escaping under pressure could cause serious burn injuries.

Removal

1 Open the expansion tank cap and release the pressure in the cooling system. Screw the cap back on again.

2 For B234i: Remove the upper half of the intake manifold, see page 194.

3 Unplug the connector and remove the sensor.

Fitting

Fit in reverse order.

Tightening torque: 13 Nm (9.5 lbf ft)

Relay panel

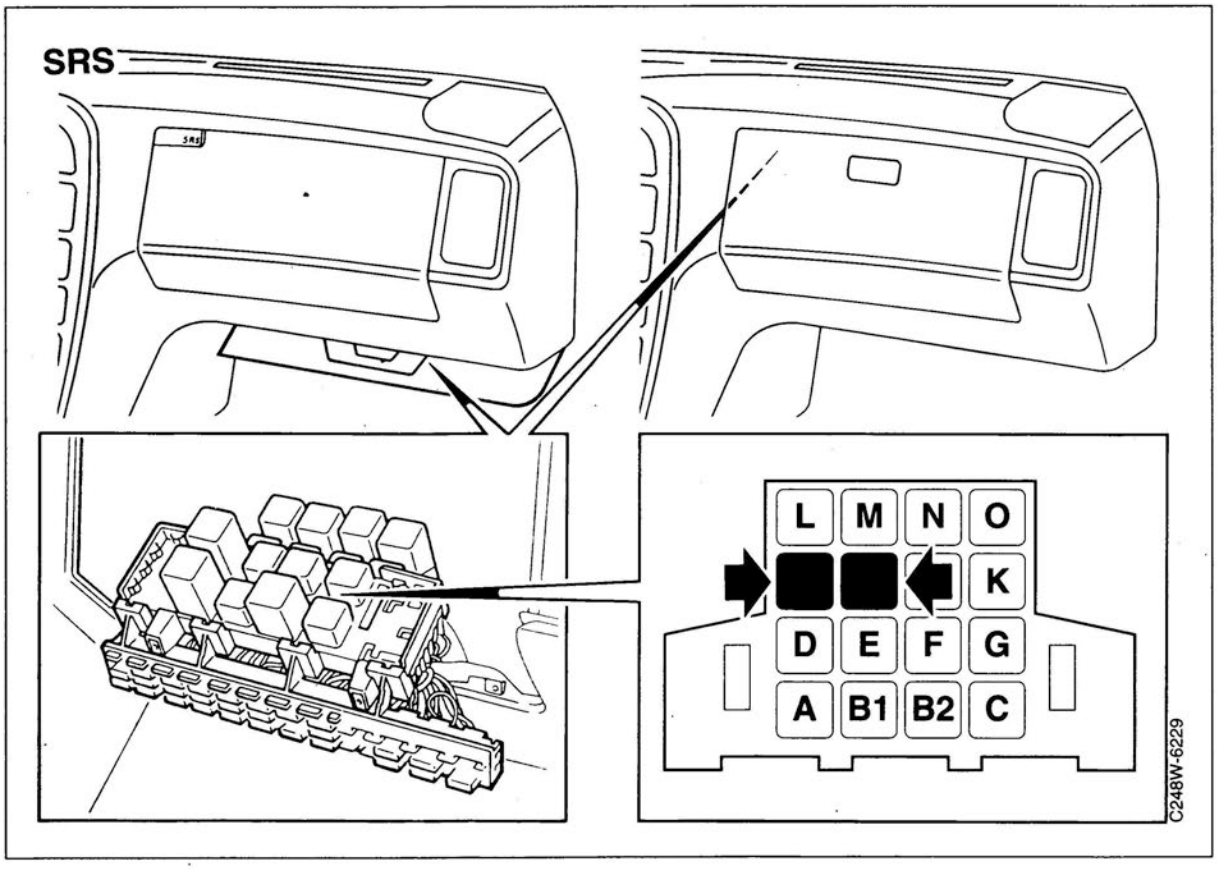

Cars without an airbag on the passenger side

The relay panel is located behind the glove box.

Cars with an airbag on the passenger side

The relay panel is located under the airbag on the passenger side.

Removal/fitting

For removal/fitting, see Service Manual 8:2 "Interior equipment".

LH control module

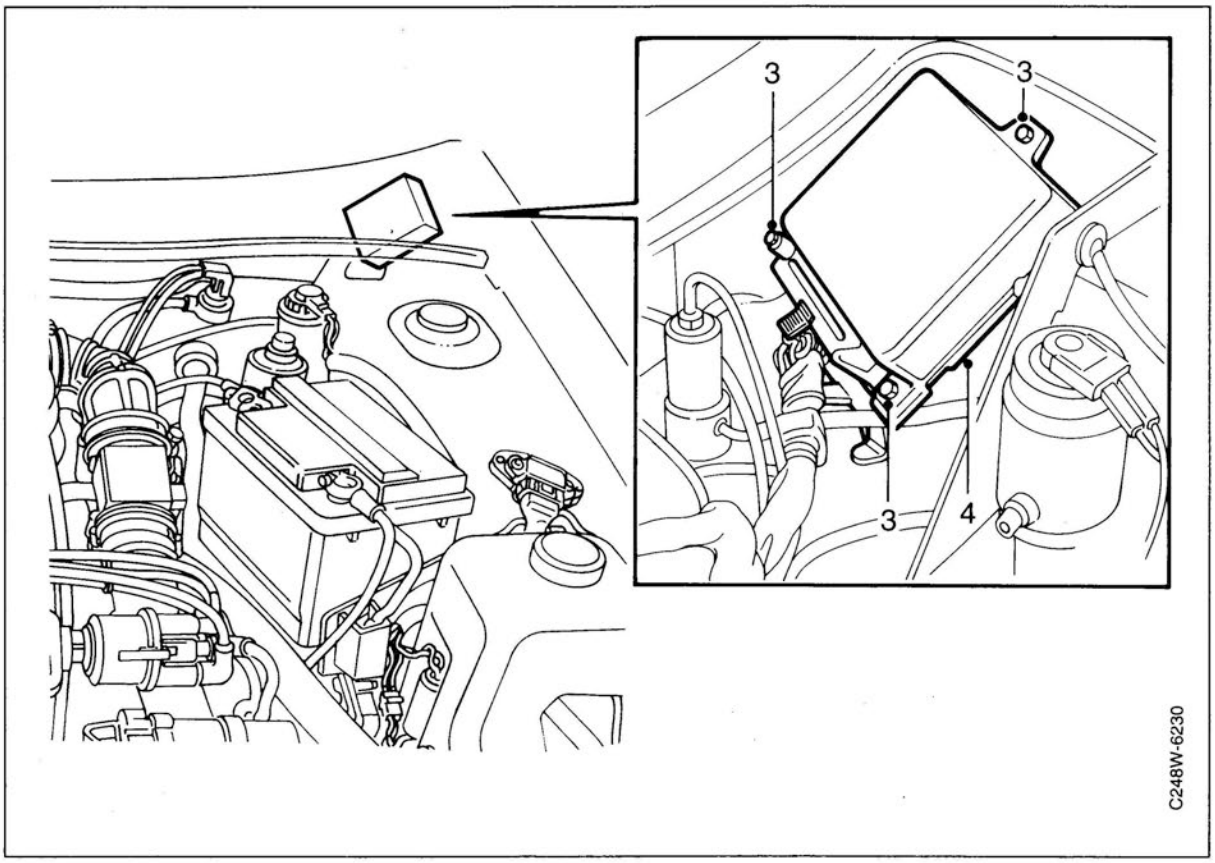

Removal

1 Turn the ignition switch to OFF.

Important

Wait at least 40 seconds before unplugging the control module connector. If this is not done, the control module could be damaged since it takes 32 seconds for the main relay to cut off its power supply.

2 Remove the cover panel over the false bulkhead space on the left-hand side.

3 Unplug the ABS control module.

4 Undo the LH control module's retaining bolts or release its clip.

5 Release the connector's toggle clip and remove the control module.

Fitting

Fit in reverse order.

Drive the car on test for adaptation of the new control module.

Important

The LH control module used in systems with a mass air flow sensor of plastic must never be replaced by a control module designed for systems with a mass air flow sensor of aluminium. If this is done, the mass air flow sensor will be ruined.

Mass air flow sensors of aluminium are fitted to all model year 1985-1987 car versions and to model year 1988 turbo cars.

Pressure switch (LH 2.2 turbo engine)

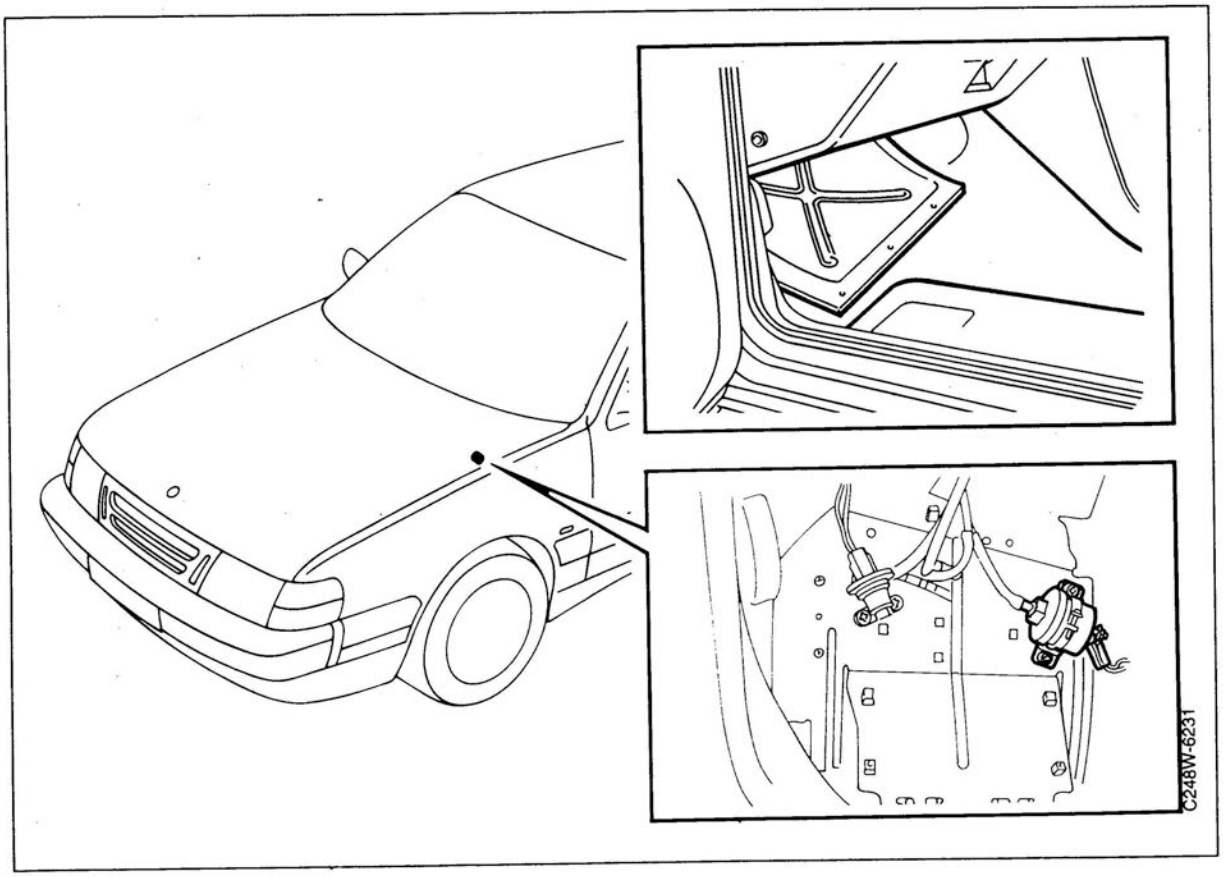

Removal

1 Remove the protective panel under the left-hand side of the dashboard (5 screws).

2 Remove the panel.

3 Detach the hose connections and retaining clip. Remove the pressure switch.

Fitting

Fit in reverse order.

Checking and adjusting the kick-down wire

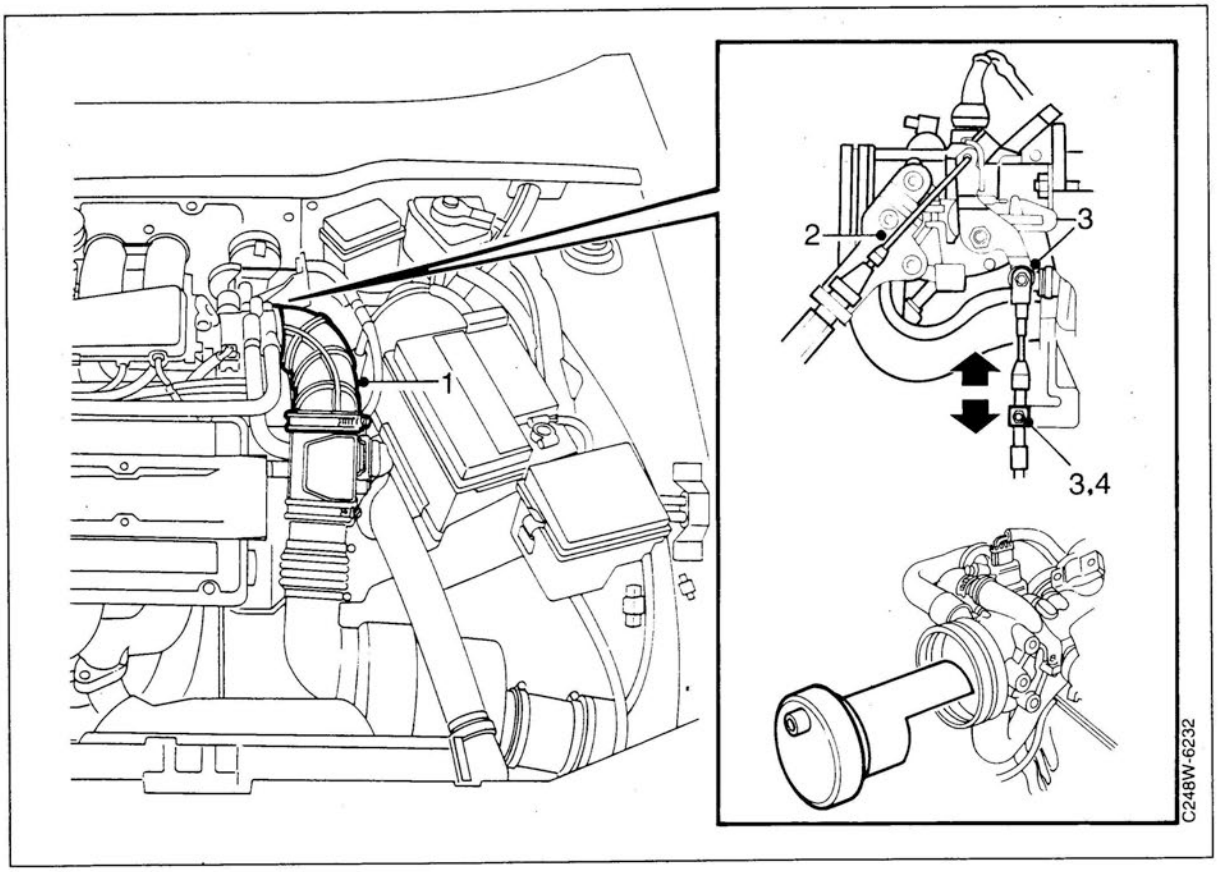

1 Detach the hose from the throttle body.

2 Press the throttle lever down to the kick-down position and insert tool 87 91 980 into the throttle body.
The "UPP" mark on the tool should fit up against the casting seam in the throttle body.

3 Check the adjustment of the kick-down wire by releasing the circlip securing the wire to the throttle lever. Pull the wire out to the wide open throttle position. Check that the hole in the wire's bracket is opposite the hole in the throttle lever.

4 If the holes do not coincide, adjust the wire casing.

5 Press the throttle lever down and remove the tool from the throttle body. Carefully move back the throttle lever.

6 Refit the hose on the throttle body.

Conversion of car with catalytic converter for running on leaded petrol

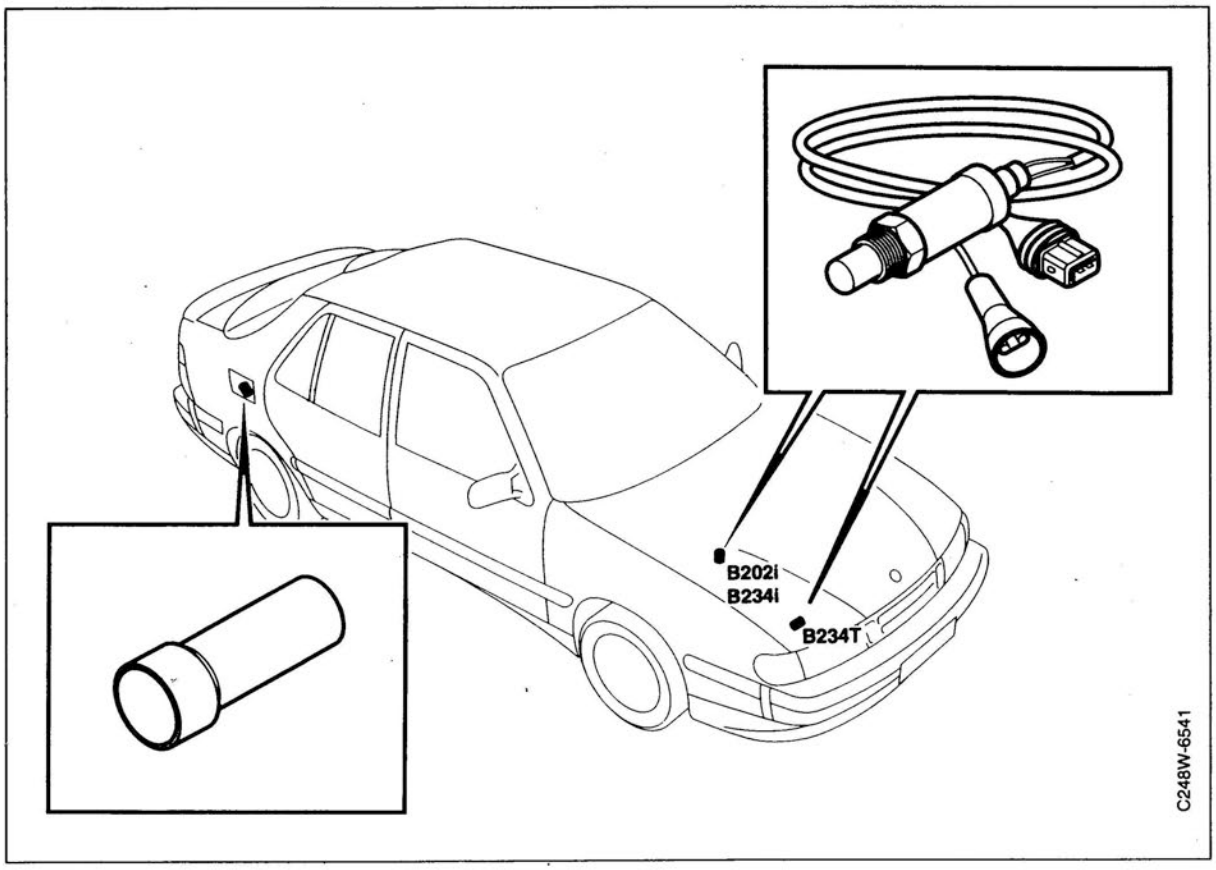

Cars concerned

Model year 1993 and earlier cars with LH 2.4, 2.4.1 or 2.4.2.

Background

The use of leaded petrol in a car equipped with a catalytic converter will soon cause damage to the oxygen sensor with drivability problems as a result. In addition, the catalytic converter will be rendered useless and after that the exhaust emission control system will be ineffective.

Diagnostic procedure

When travelling to countries where unleaded petrol is not available, the car's regular oxygen sensor must be replaced by one that will not be damaged by lead. In addition, a silencer must be fitted in place of the catalytic converter.

In order to fill up with leaded petrol it will be necessary to fit an adapter, 93 45 802, in the fuel filler pipe.

Note

Observe the applicable exhaust emission regulations before removing the catalytic converter.

Save the replaced parts for subsequent refitting.

Conversion of car with catalytic converter for running on leaded petrol (contd.)

Materials

Car version	Description	Part No.	Remarks
9000i with forward-mounted catalytic converter	Front pipe Rubber suspension mounts (2)	41 63 937[1)] 93 92 465	Remove the steady bar for the catalytic converter [1)]45 27 669 Special service part for markets with leaded petrol (ME)
9000i, 9000T	Silencer	88 22 322	
9000T with forward-mounted catalytic converter	Front pipe Rubber suspension mounts (2)	41 63 945[2)] 93 92 465	Remove the steady bar for the catalytic converter [2)]45 27 545 Special service part for markets with leaded petrol (ME)
9000 -M1991	Lead-resistant oxygen sensor	93 21 696	
9000T M1992-94, 9000i M1992-93	Lead-resistant oxygen sensor	41 64 323	
9000i M1994	Lead-resistant oxygen sensor	43 01 305	
All cars with catalytic converter	Fuel filler pipe adapter	93 45 802	

Important

Before the catalytic converter and regular oxygen sensor are refitted, the car must first be driven on a full tank of unleaded petrol until empty.

Cold-starting valve

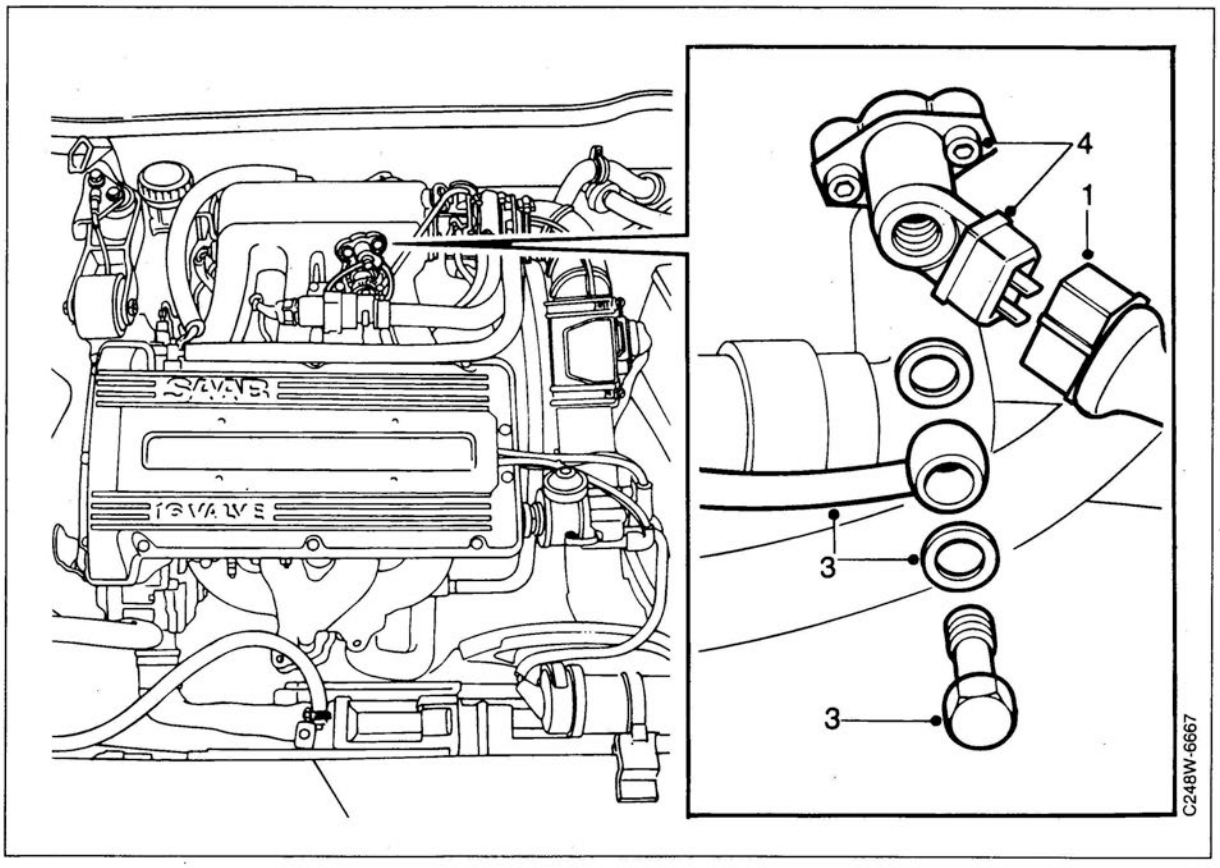

⚠ **WARNING**

- Work only in a well-ventilated area. If approved equipment for the extraction of fuel vapour is available, be sure to use it.
- Wear protective gloves. Prolonged contact with fuel may give rise to skin irritation or dermatitis.
- Be mindful of the danger of causing sparks, such as when making and breaking electrical circuits, short circuiting components, etc.
- No smoking anywhere in the vicinity!
- Always have a suitable fire extinguisher near at hand.

Removal

1 Unplug the cold-starting valve's connector.

2 Make sure you have some paper or the like handy to mop up the fuel.

3 Disconnect the fuel line.

4 Remove the cold-starting valve.

Fitting

Fit in reverse order.

Inspect the O-ring and sealing washers.

Tightening torque, fuel line: 11 Nm

Connectors and grounding points

To distinguish between connectors with the same number, the component into which the connector in question plugs is given in parentheses.

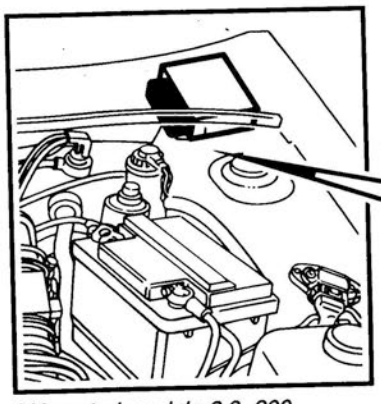

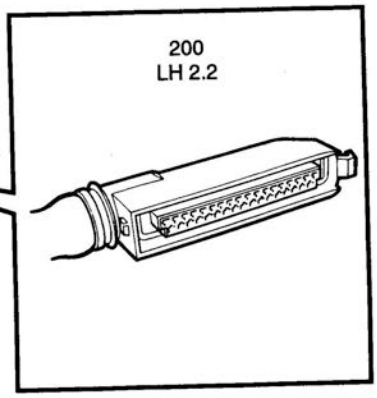

LH control module 2.2, 200

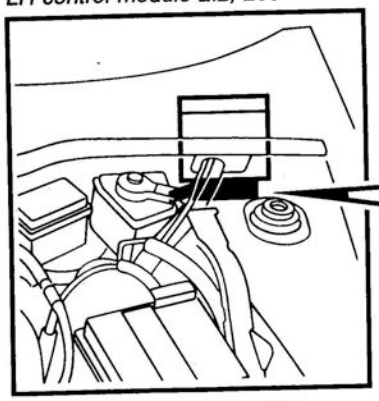

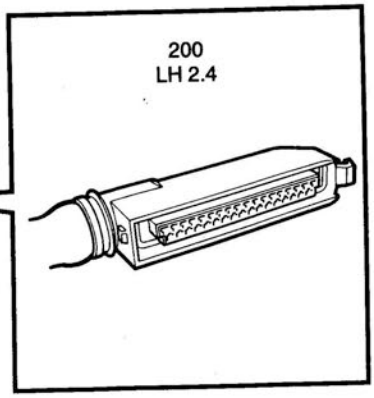

LH control module 2.4, 200

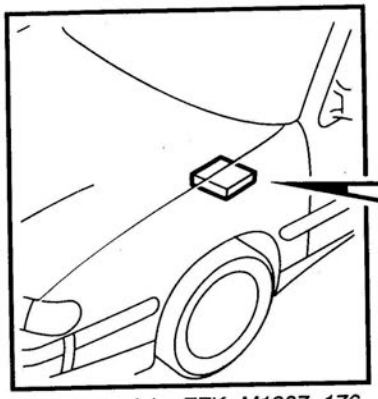

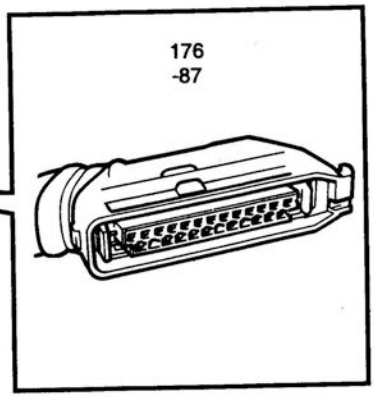

Control module, EZK -M1987, 176

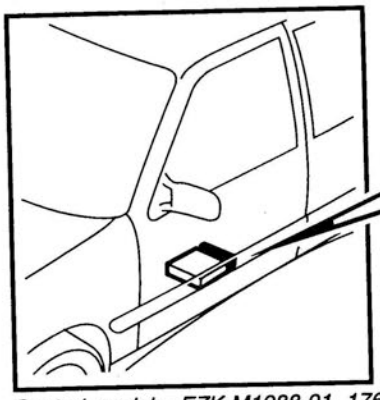

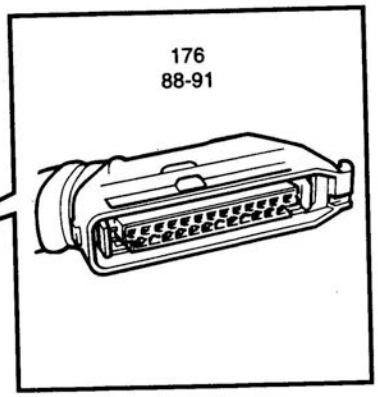

Control module, EZK M1988-91, 176

D248W-6235

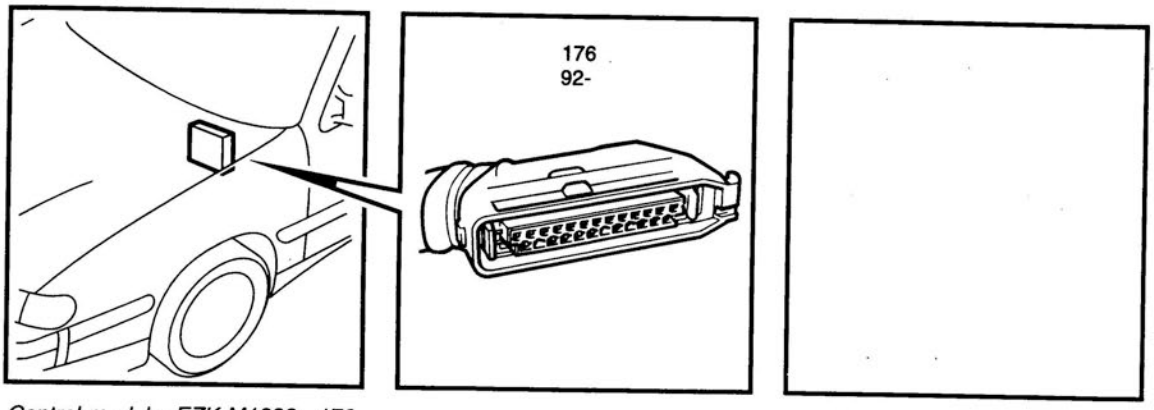

Control module, EZK M1992-, 176

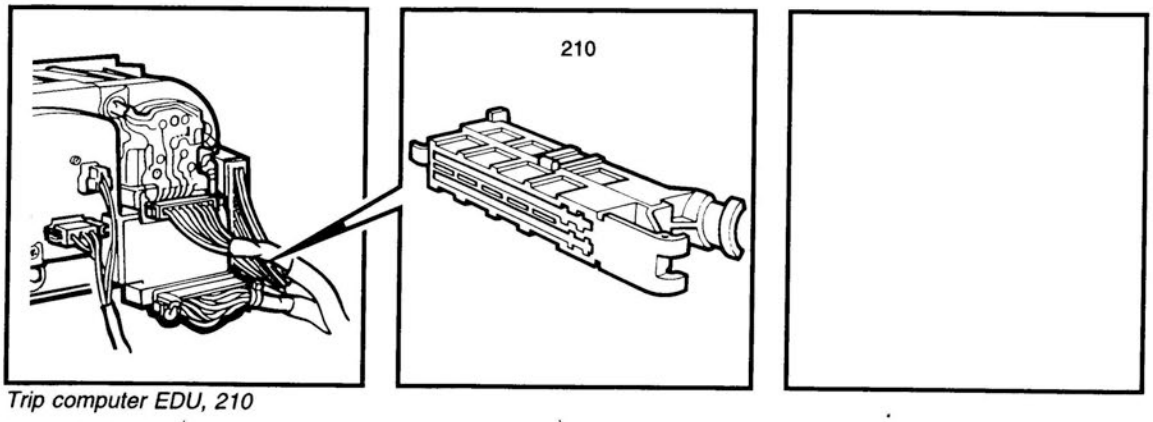

Trip computer EDU, 210

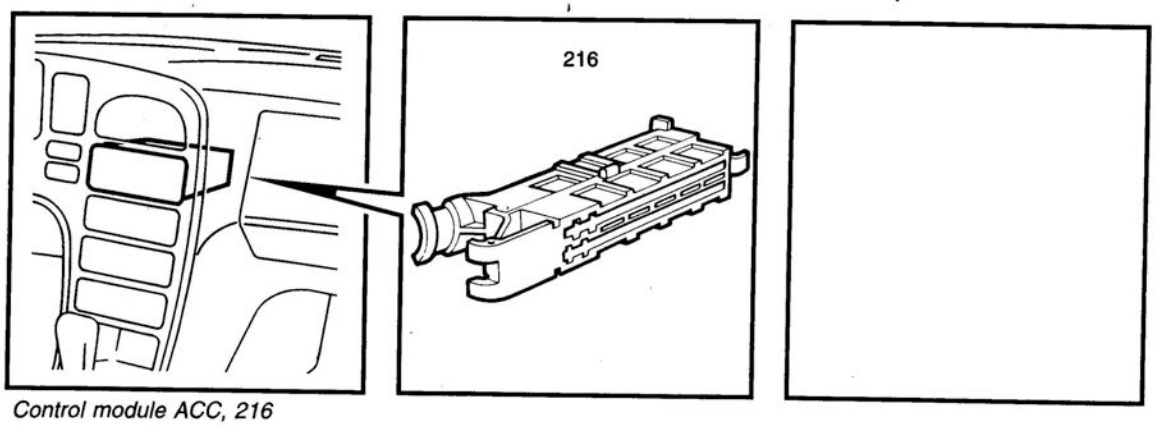

Control module ACC, 216

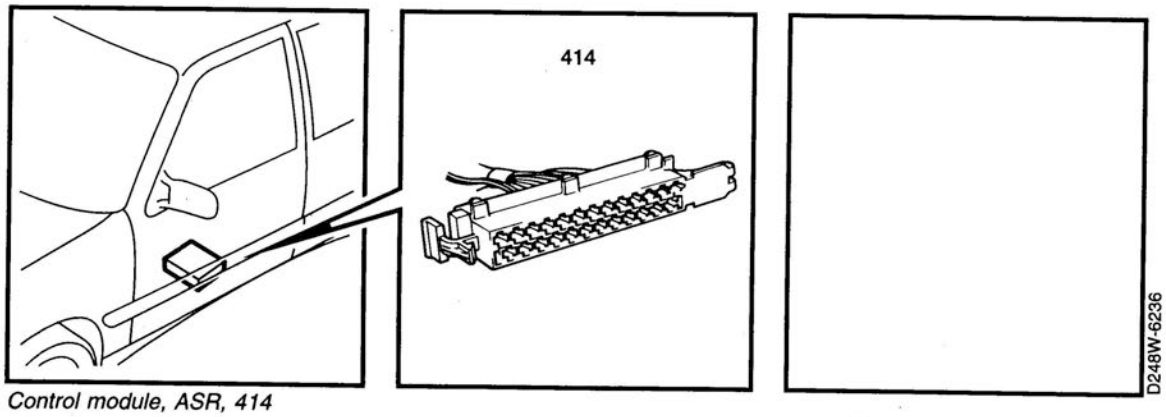

Control module, ASR, 414

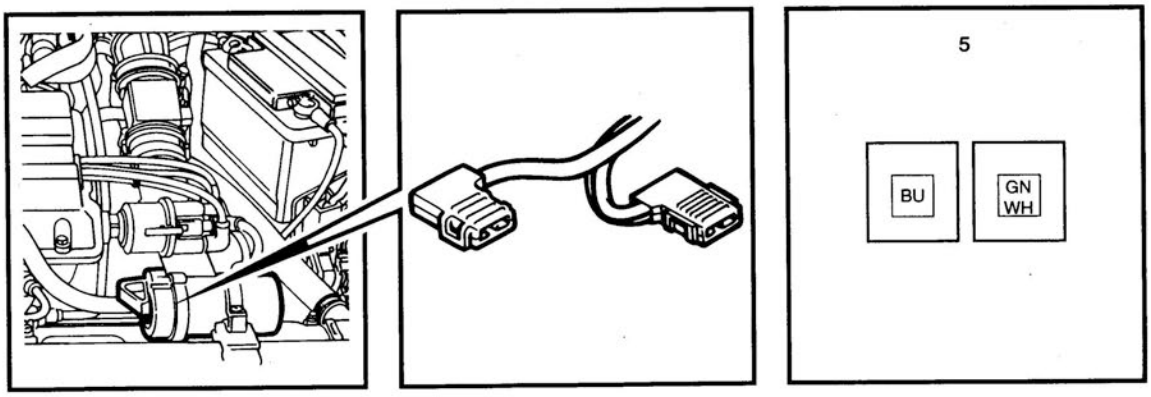

Ignition coil, B202i M1986-88, 5

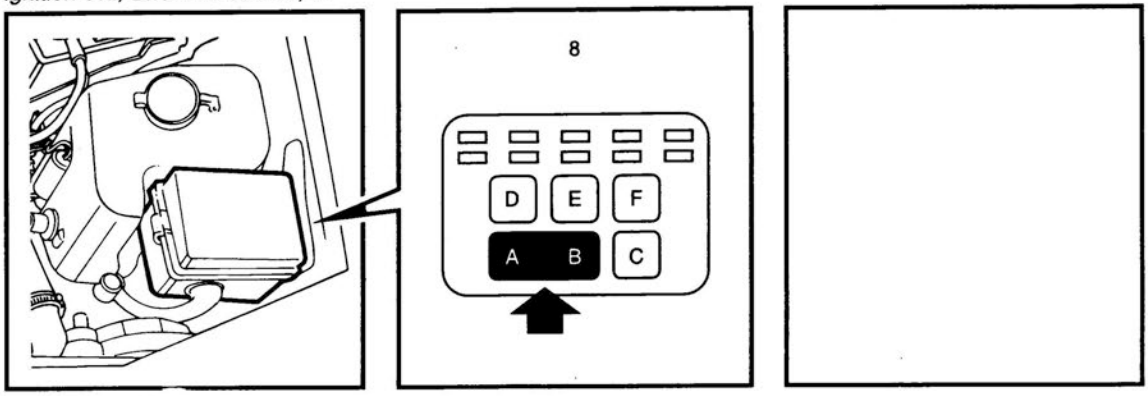

Lights relay, 8

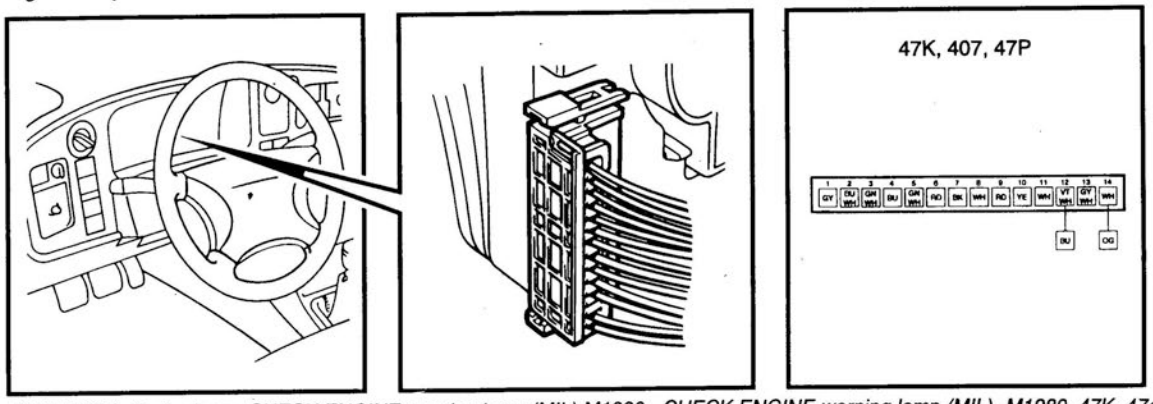

SHIFT UP indicator lamp, CHECK ENGINE warning lamp (MIL) M1990-, CHECK ENGINE warning lamp (MIL) -M1989, 47K, 47o, 47P

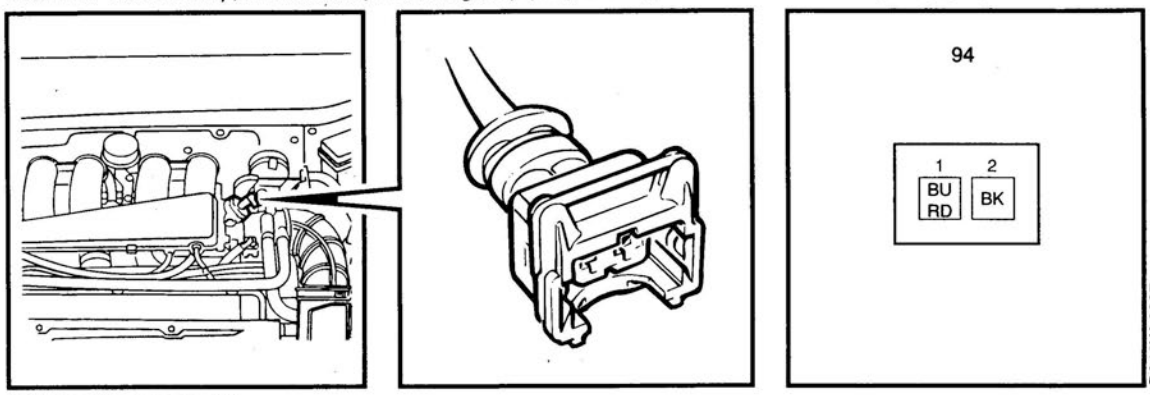

Cold-starting valve, 94

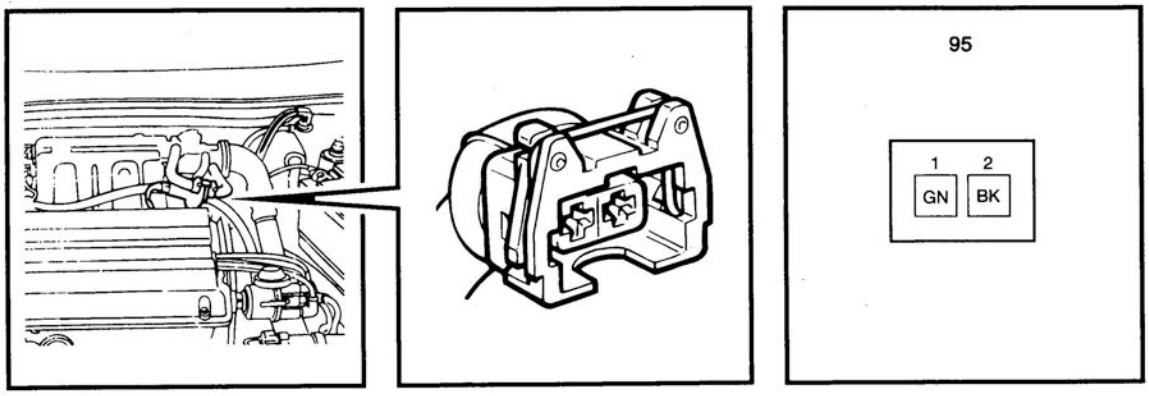

Auxiliary air valve, 95

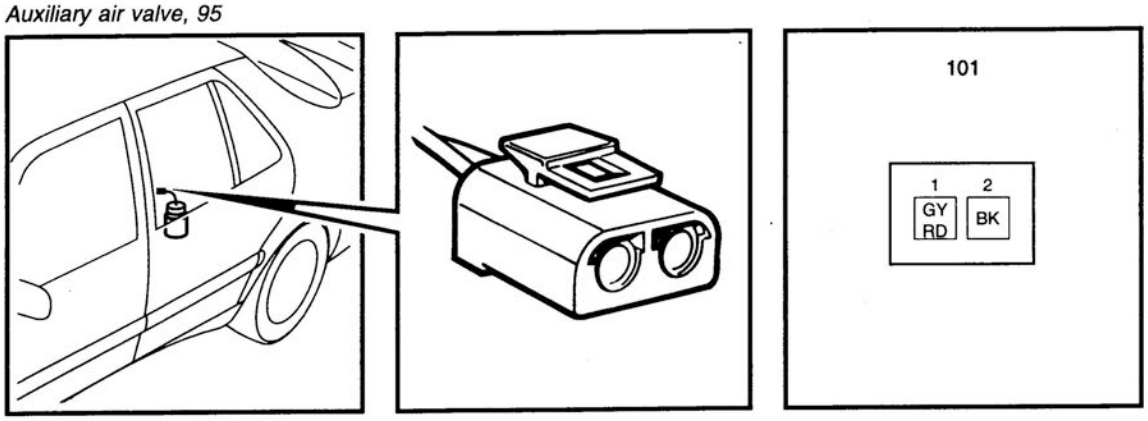

Feed pump in fuel tank, 101

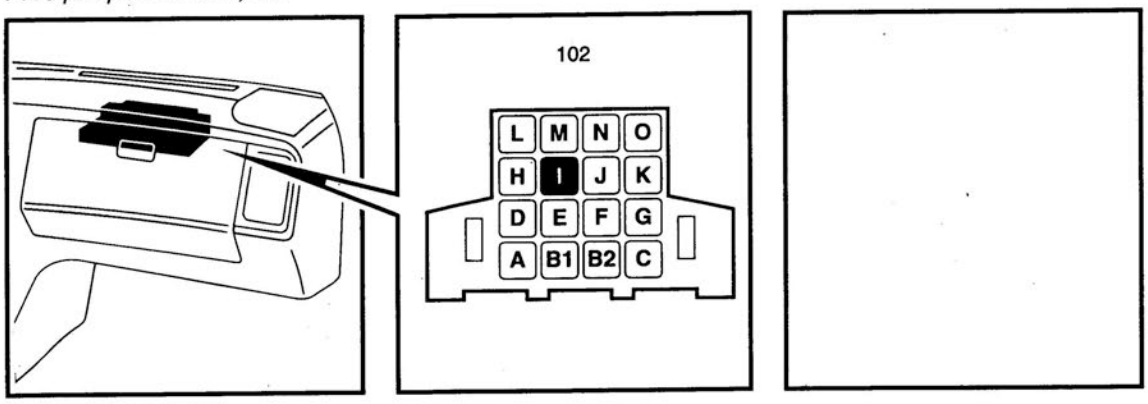

Fuel pump relay, 102

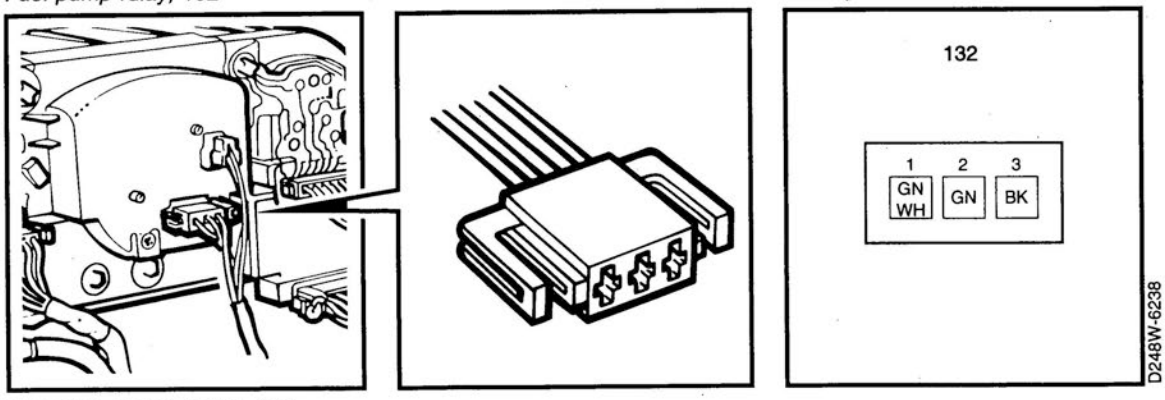

Sensor in speedometer, 132

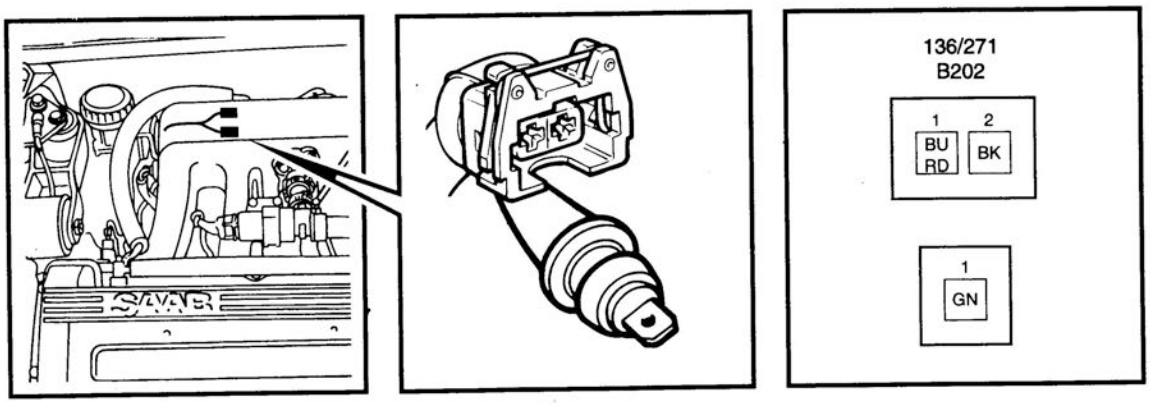

Oxygen sensor, B202, 136/271

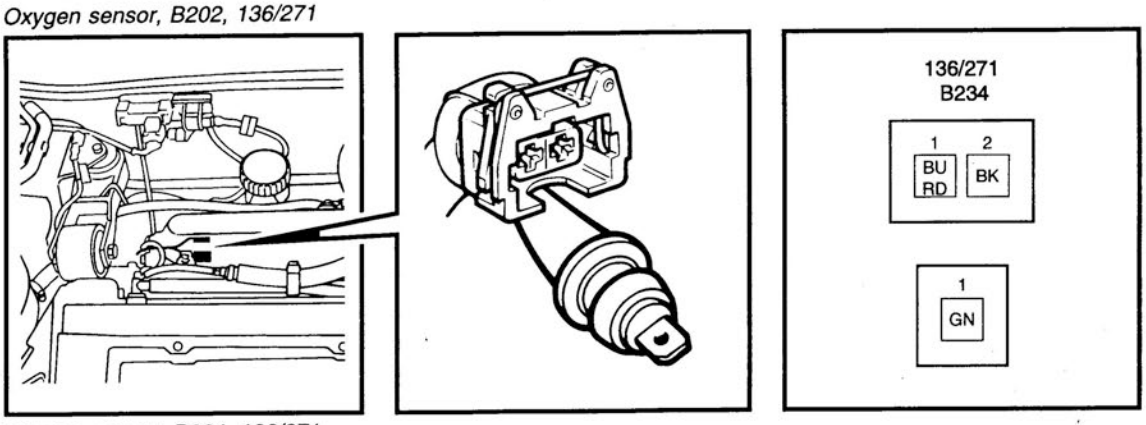

Oxygen sensor, B234, 136/271

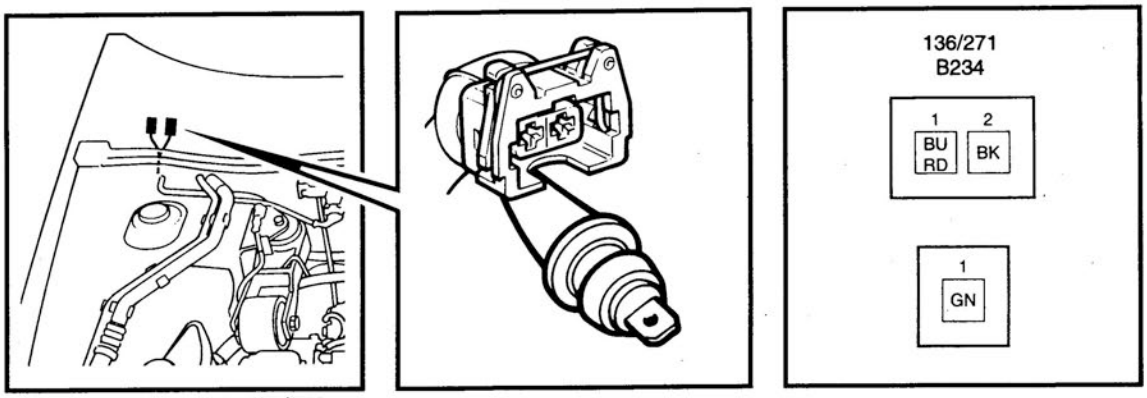

Oxygen sensor, B234, 136/271

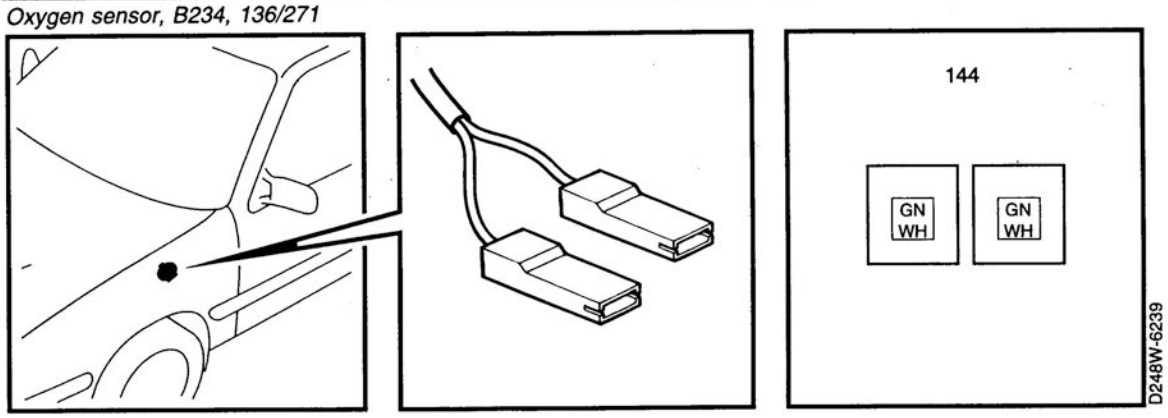

Pressure switch, 144

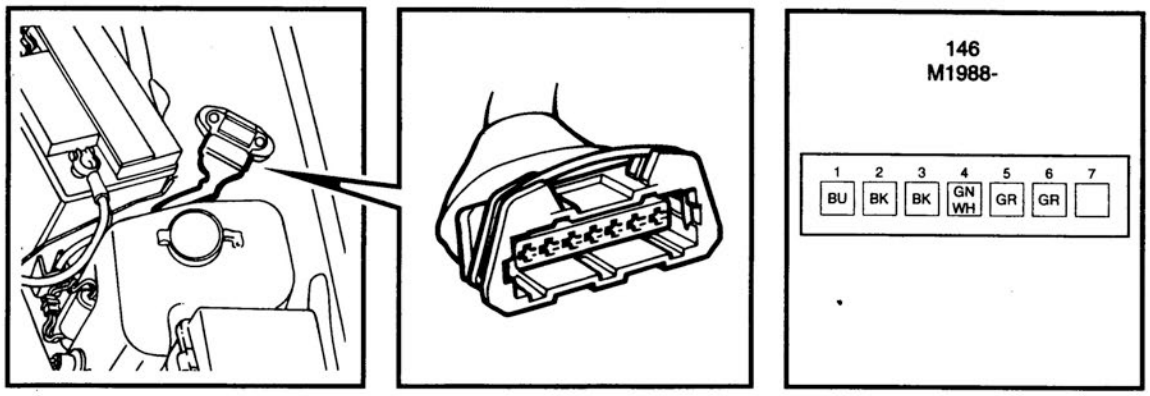

Power stage, M1988-, 146

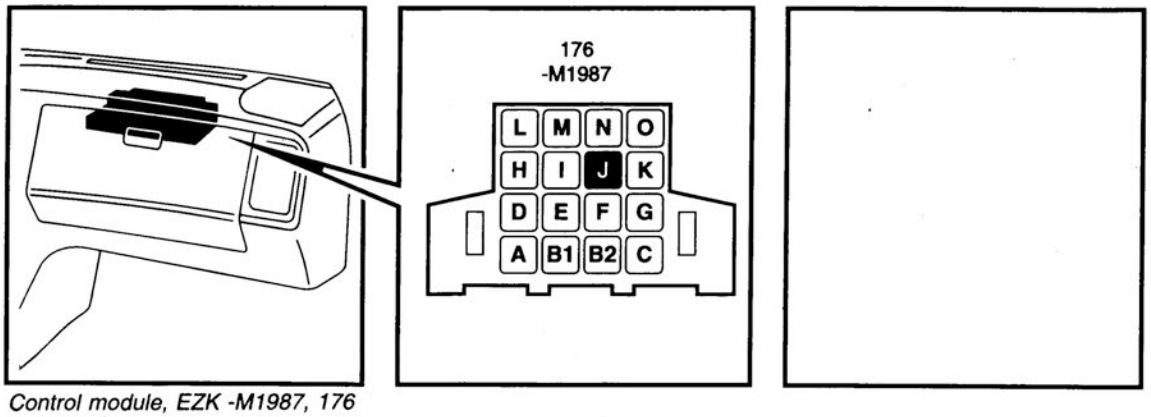

Control module, EZK -M1987, 176

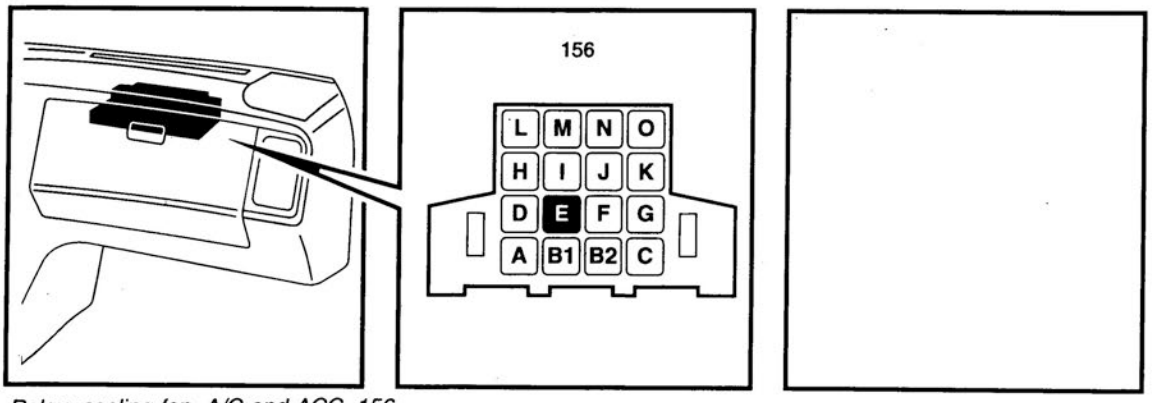

Relay, cooling fan, A/C and ACC, 156

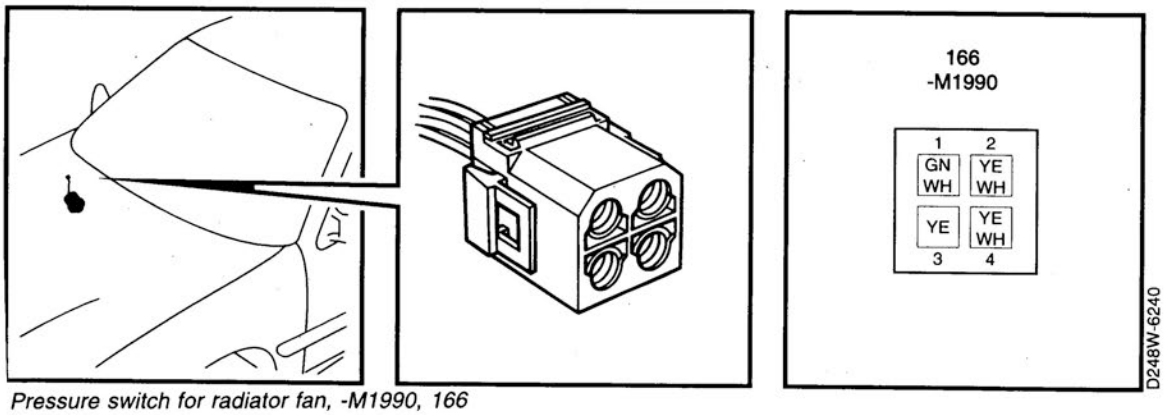

Pressure switch for radiator fan, -M1990, 166

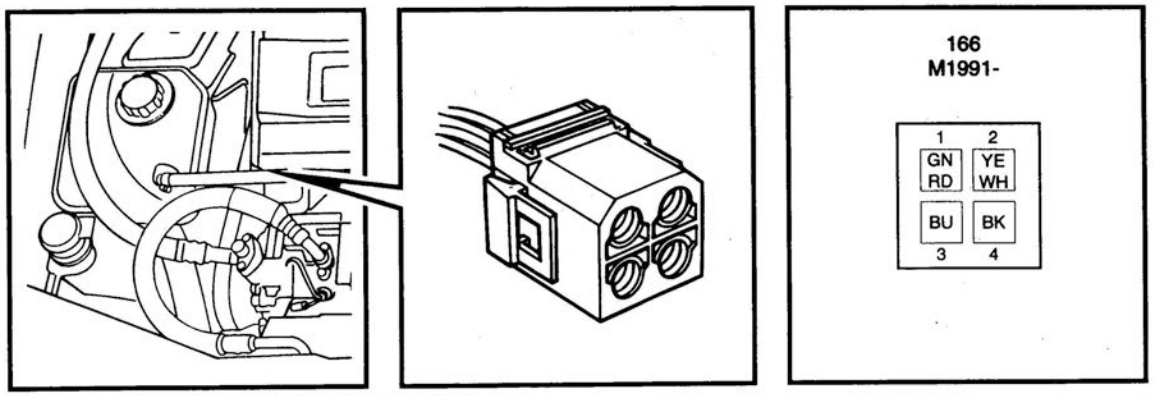

Pressure switch for radiator fan, M1991- B234i, 166

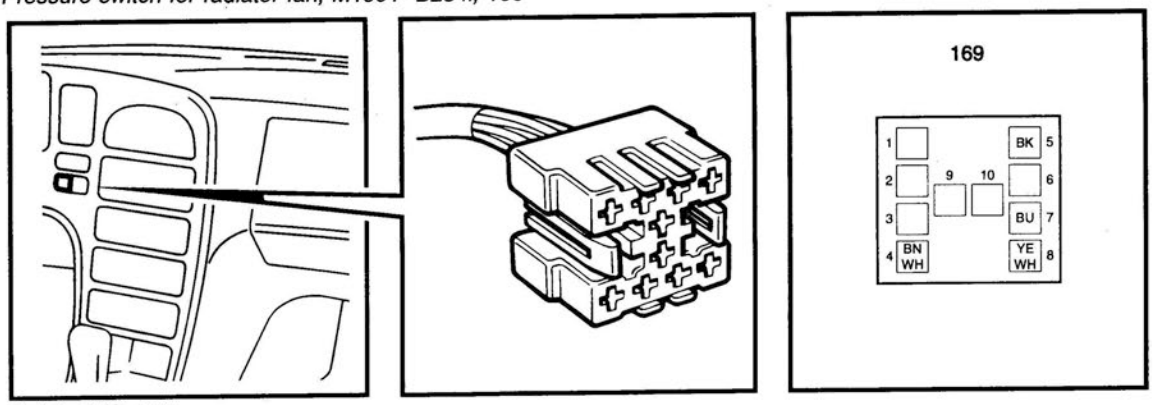

Switch, A/C, 169

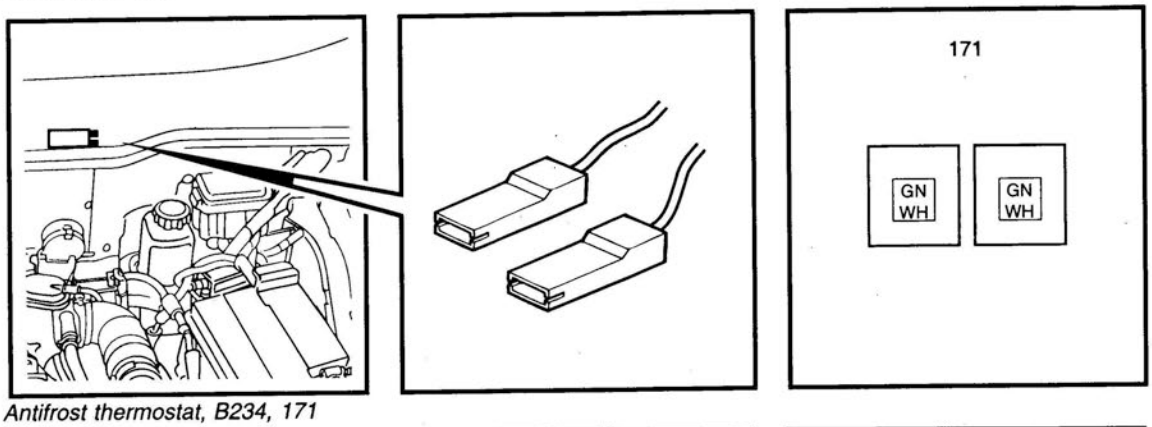

Antifrost thermostat, B234, 171

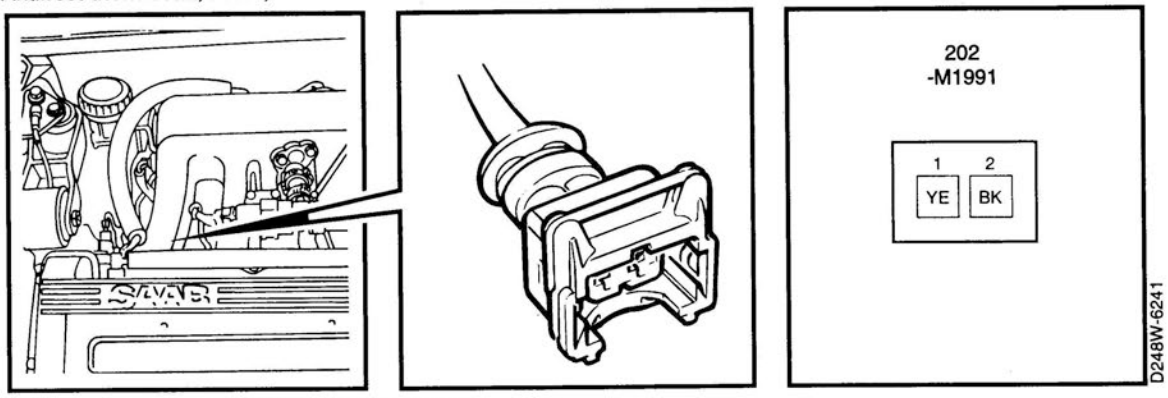

Coolant temperature sensor, B202 -M1991, 202

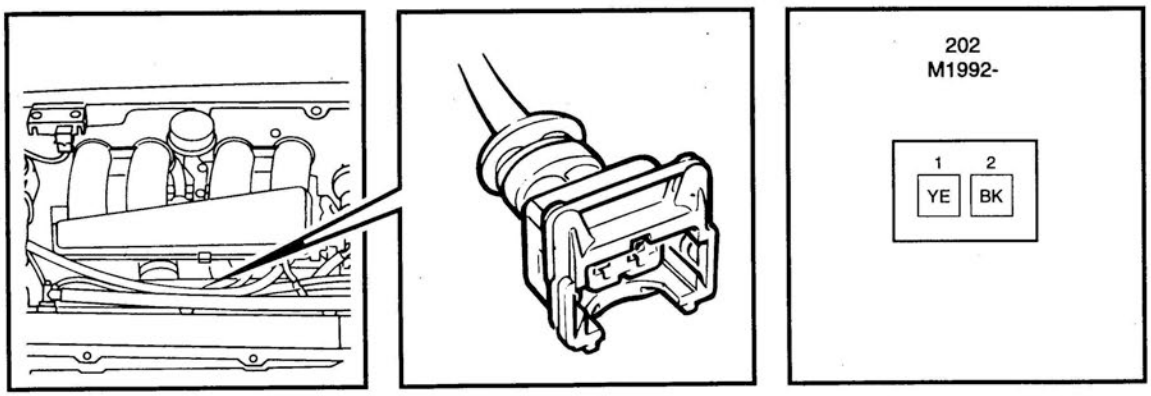

Coolant temperature sensor, B234i M1992-, 202

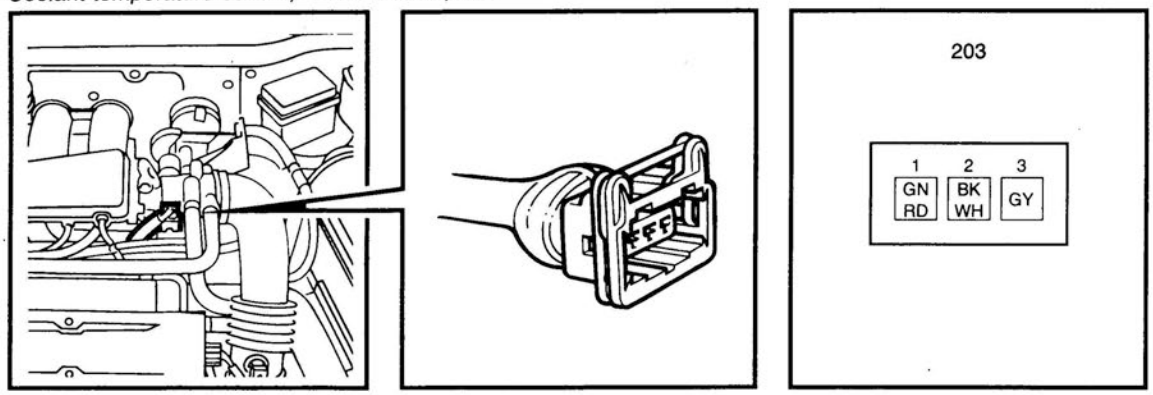

Position sensor, B234i, 203

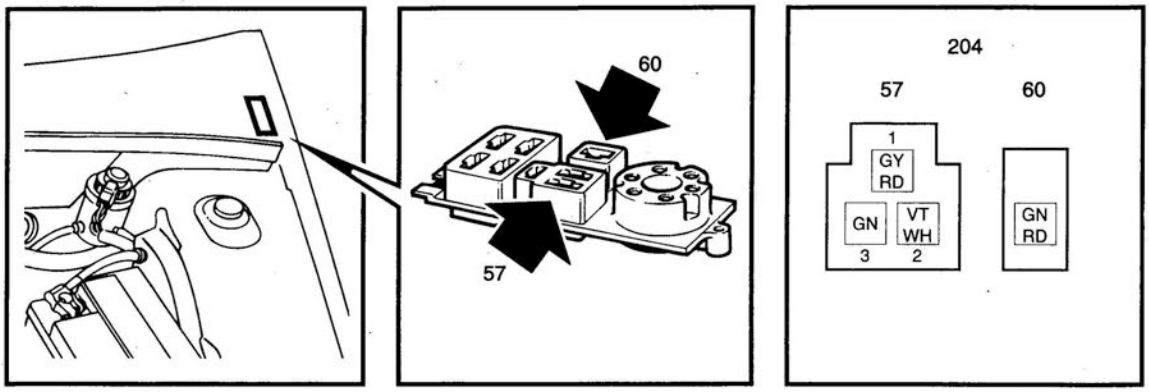

Test socket, 204

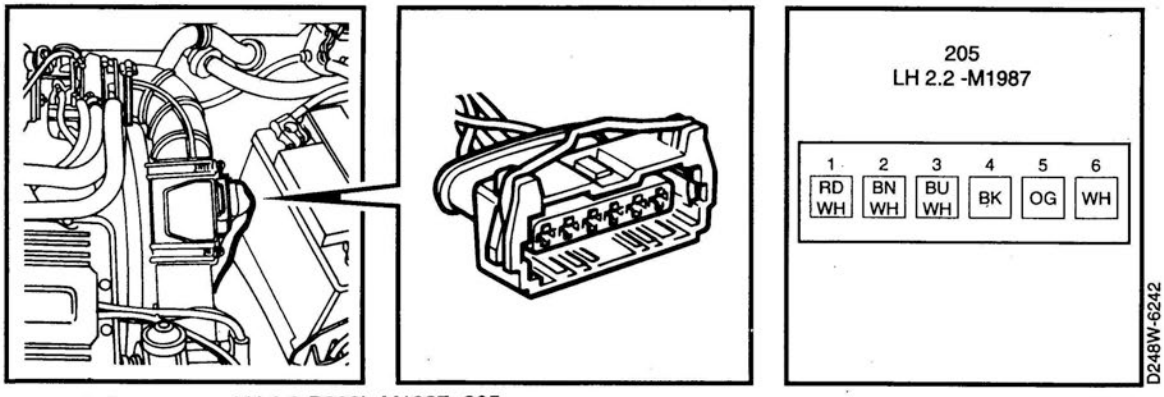

Mass air flow sensor, LH 2.2 B202i -M1987, 205

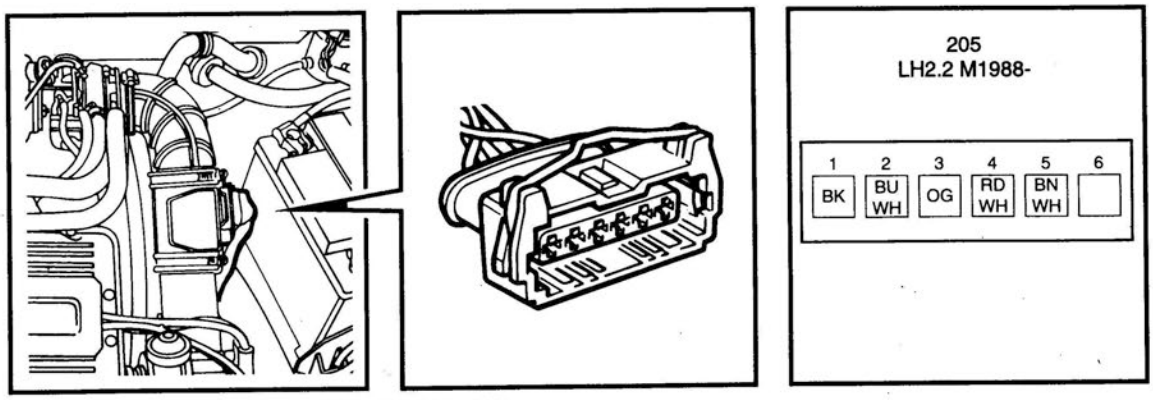

Mass air flow sensor, LH 2.2 B202i, M1988-, 205

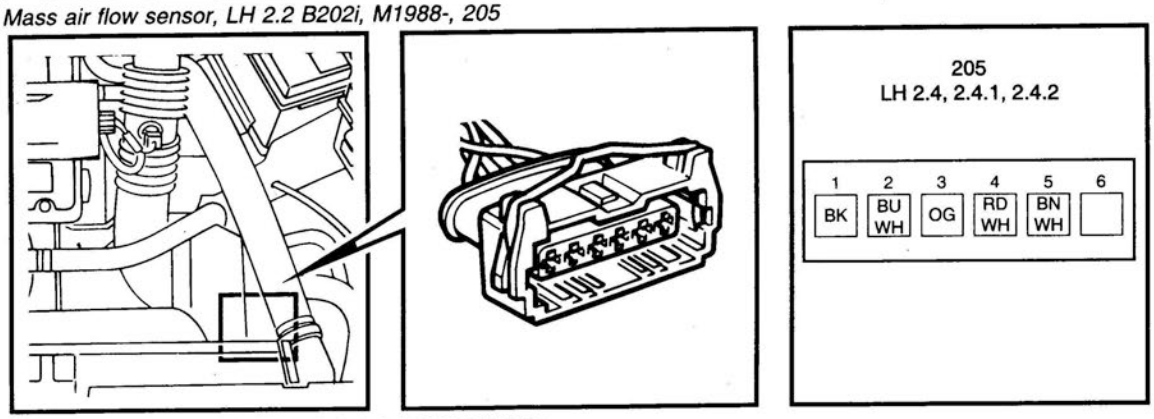

Mass air flow sensor, LH 2.4, 2.4.1, 2.4.2 B234i, 205

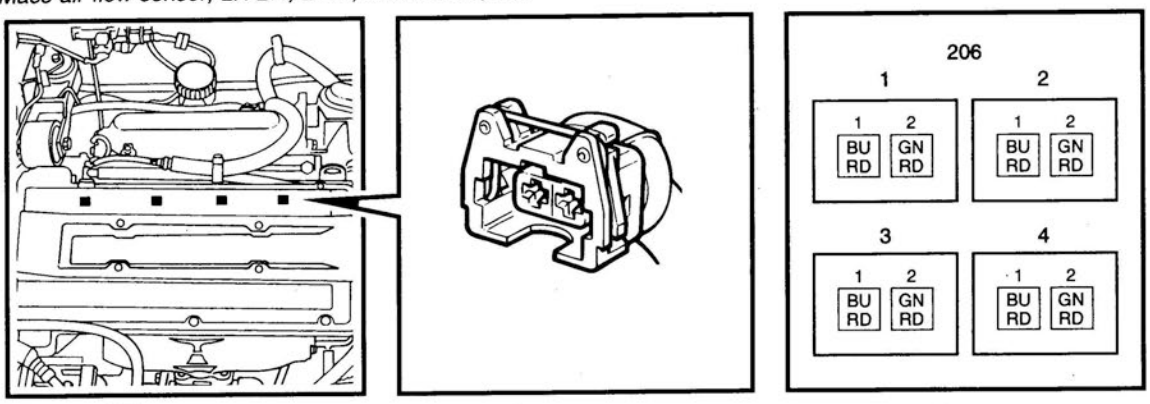

Injectors, 206

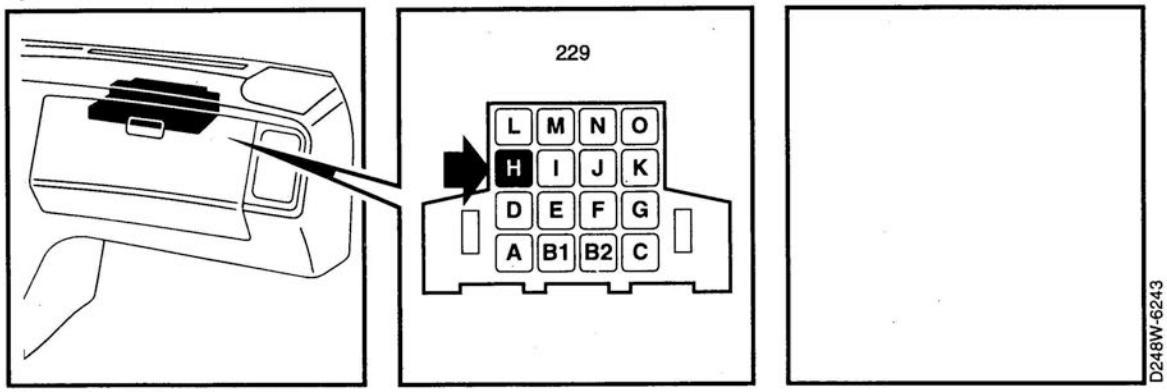

Main relay, fuel system, 229

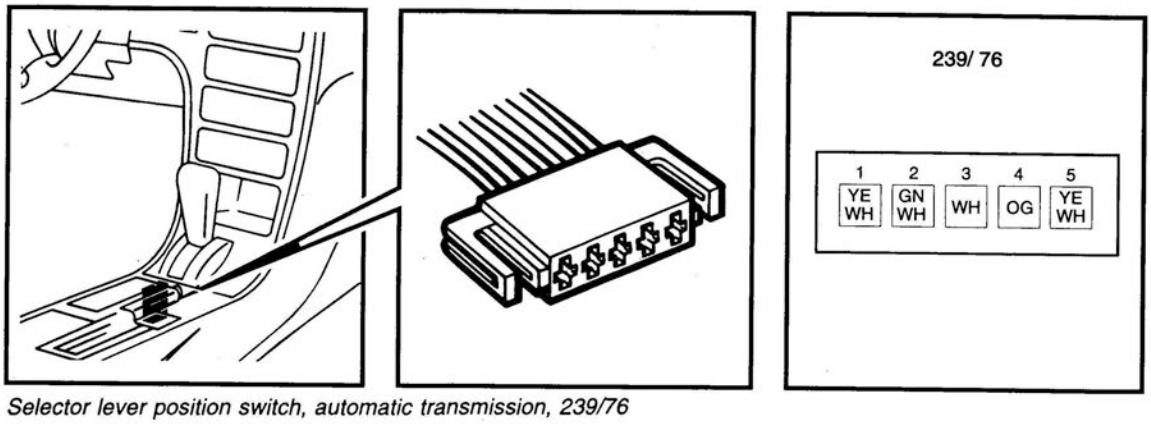

Selector lever position switch, automatic transmission, 239/76

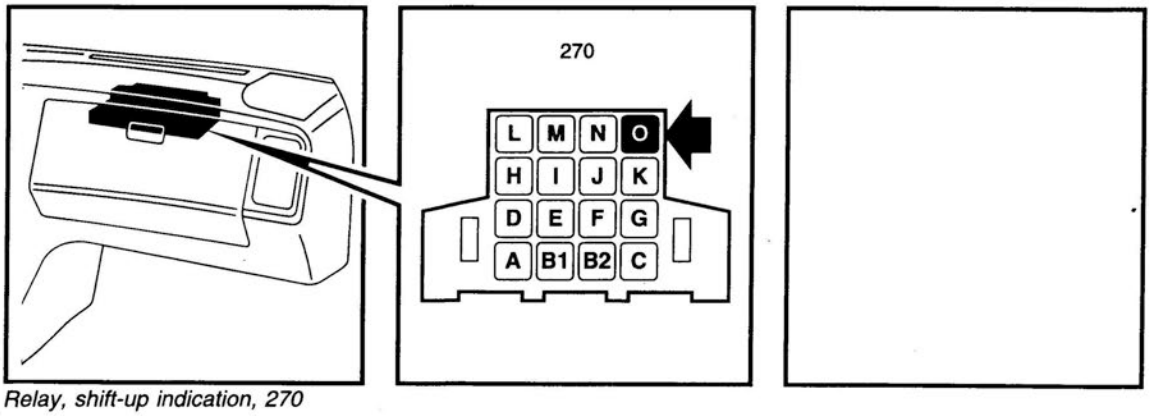

Relay, shift-up indication, 270

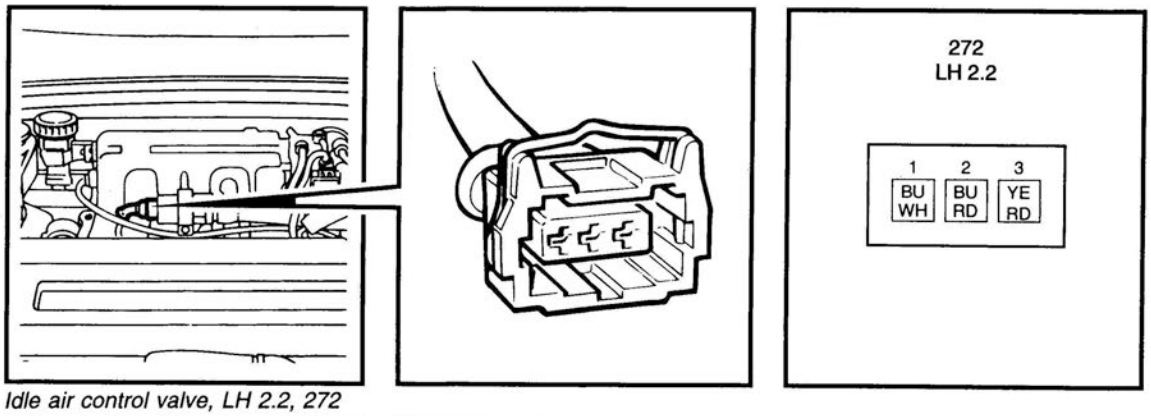

Idle air control valve, LH 2.2, 272

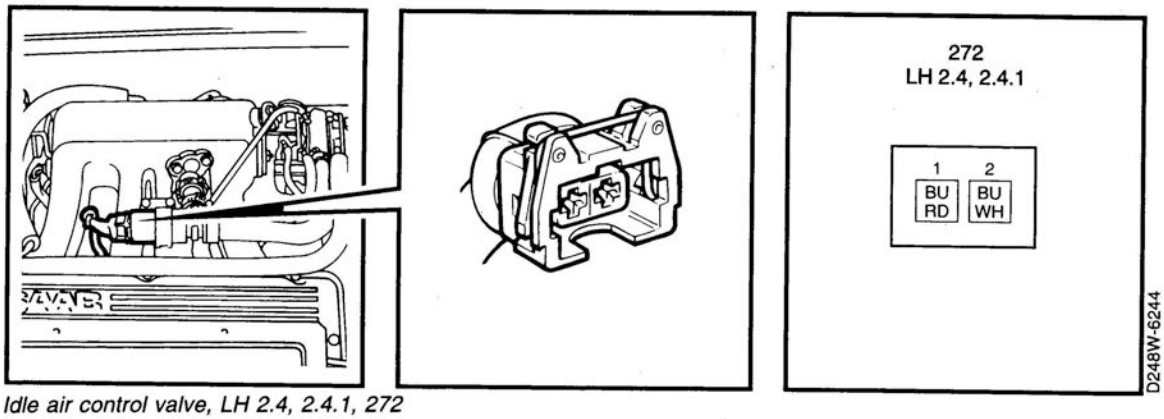

Idle air control valve, LH 2.4, 2.4.1, 272

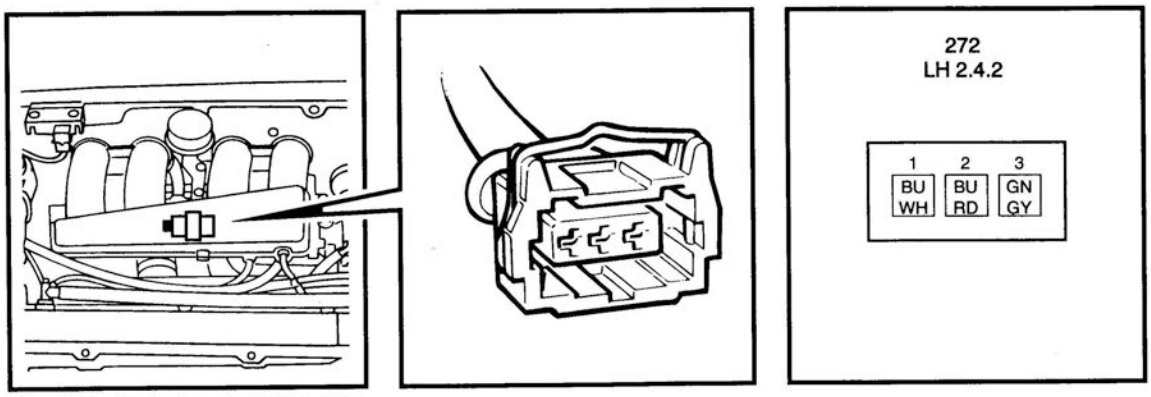

Idle air control valve, LH 2.4.2, 272

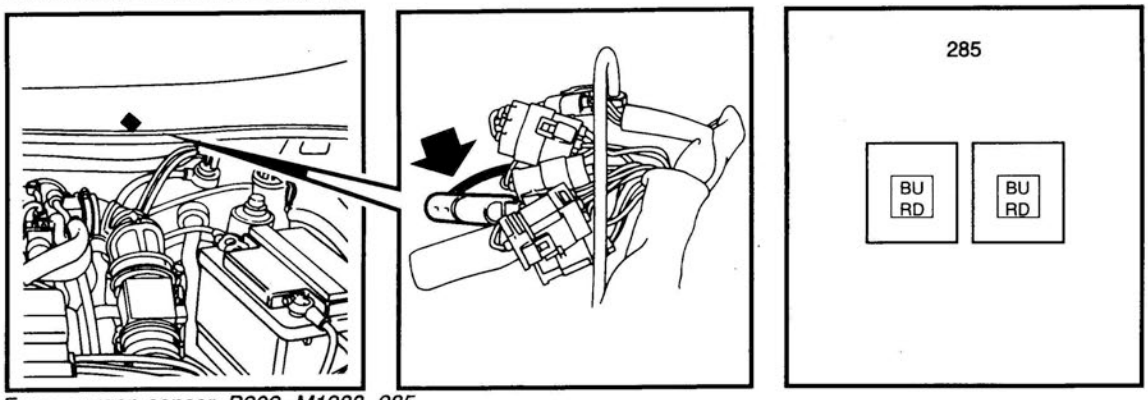

Fuse, oxygen sensor, B202 -M1988, 285

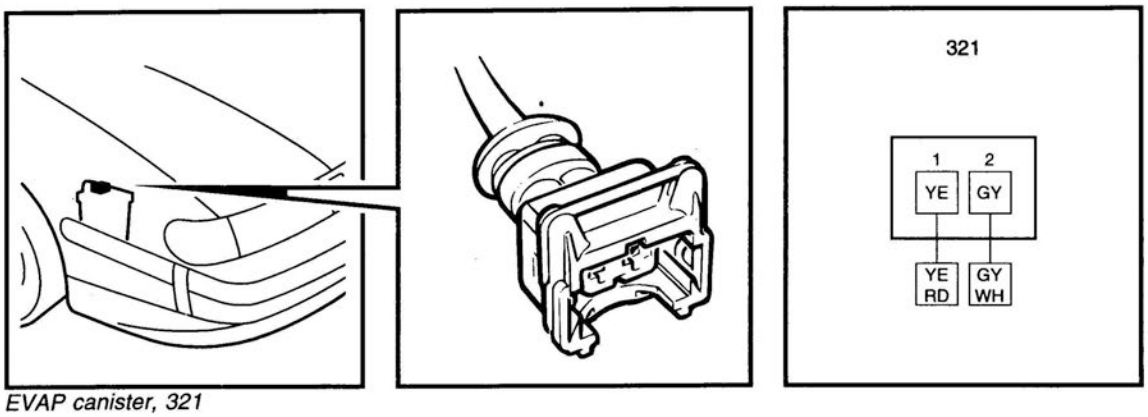

EVAP canister, 321

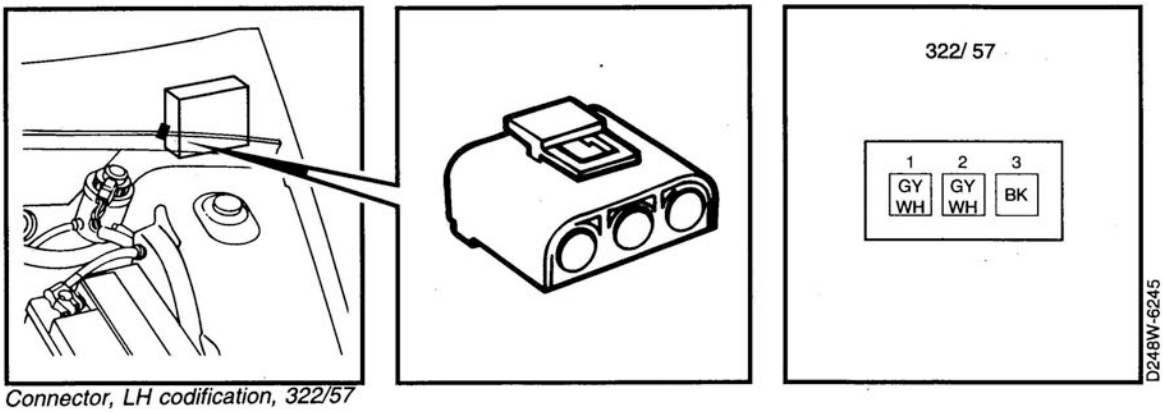

Connector, LH codification, 322/57

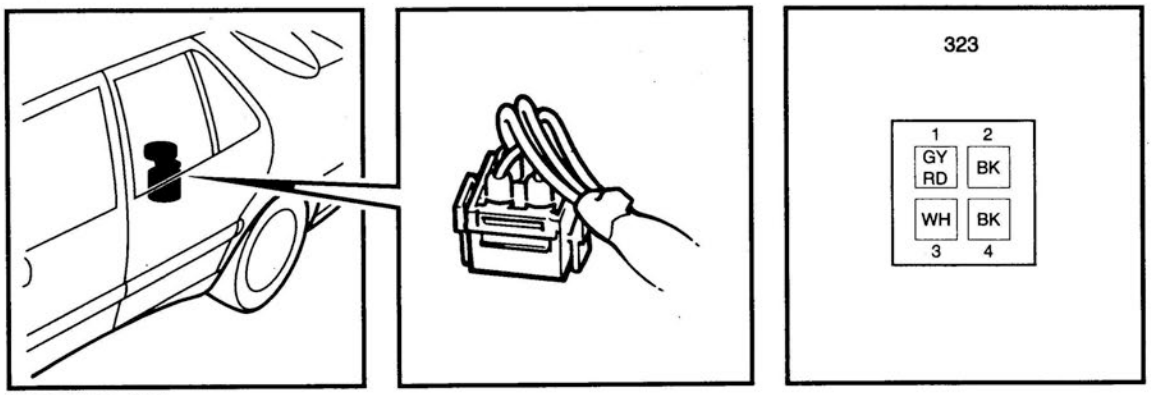

Fuel pump, 323

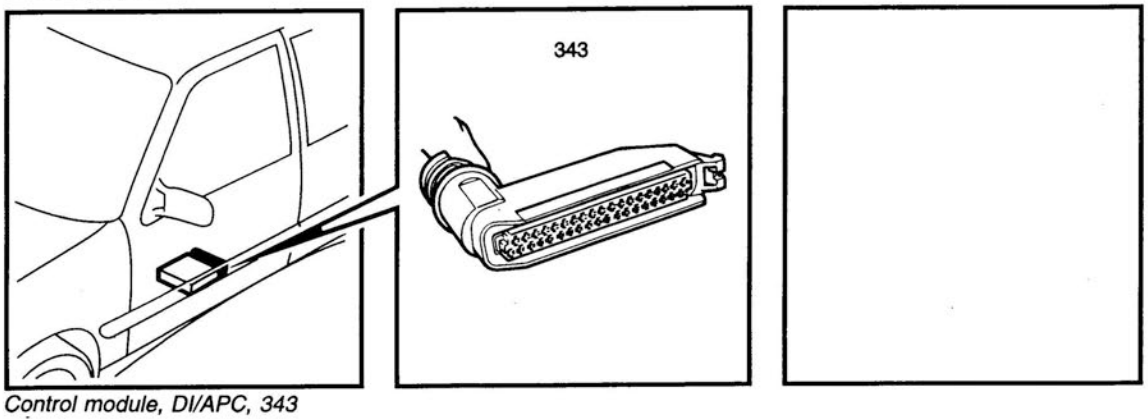

Control module, DI/APC, 343

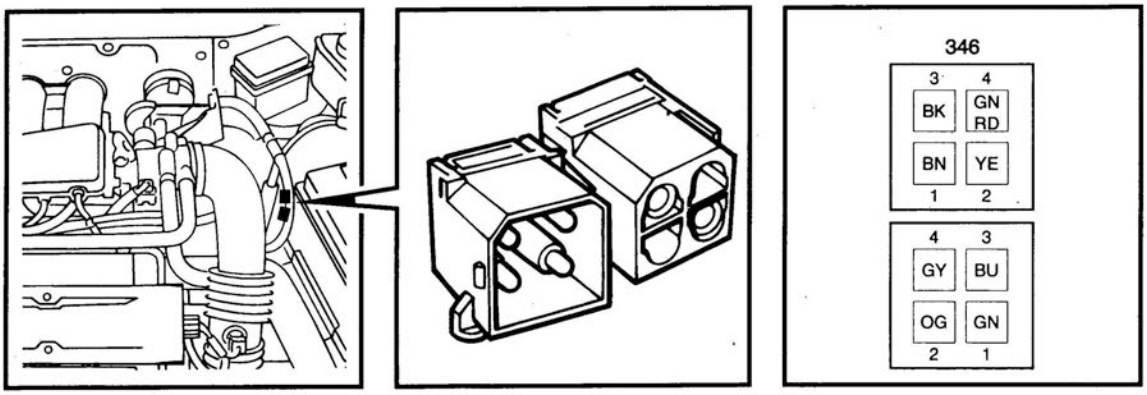

Ignition discharge module, DI/APC, 346

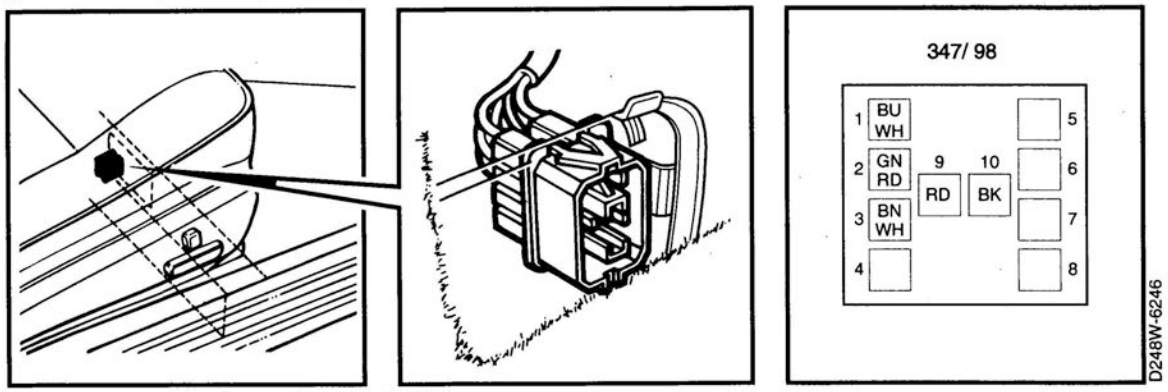

Data link connector, diagnostics test, 347/98

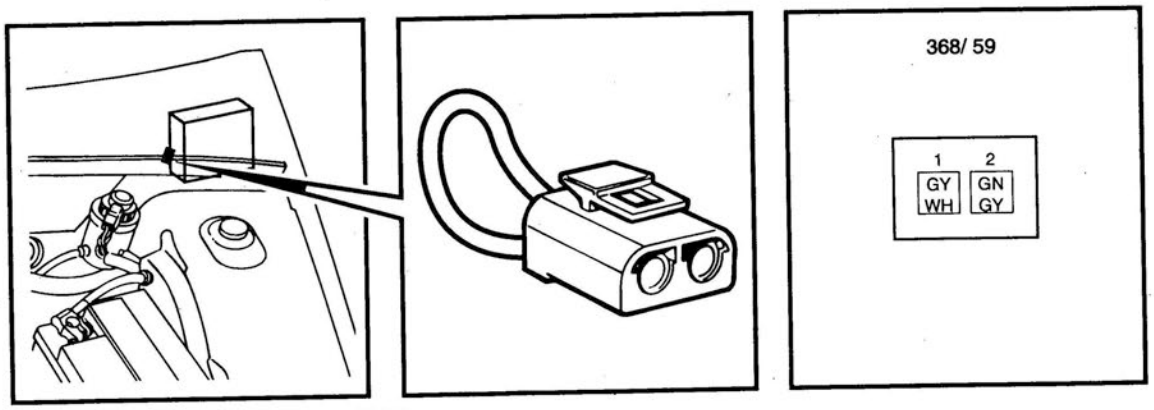

Codification, cold-starting valve, 368/59

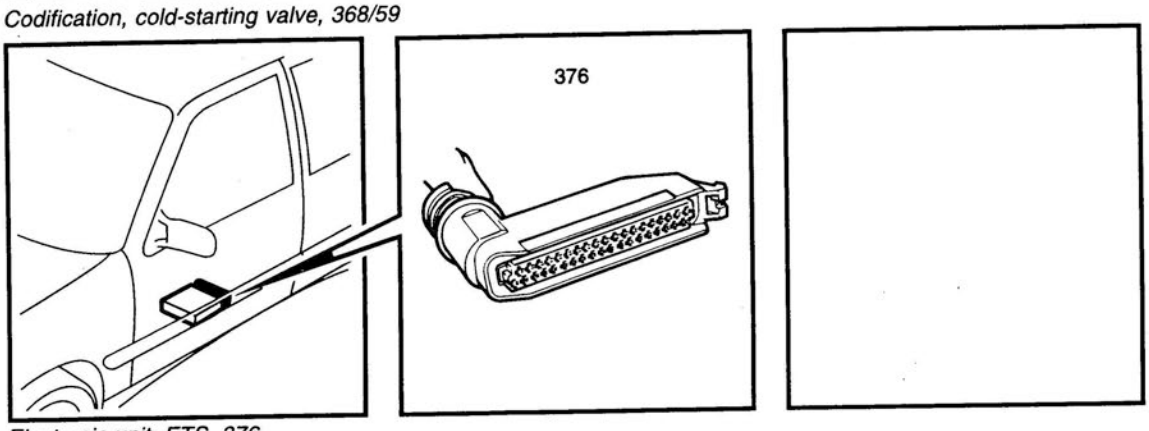

Electronic unit, ETS, 376

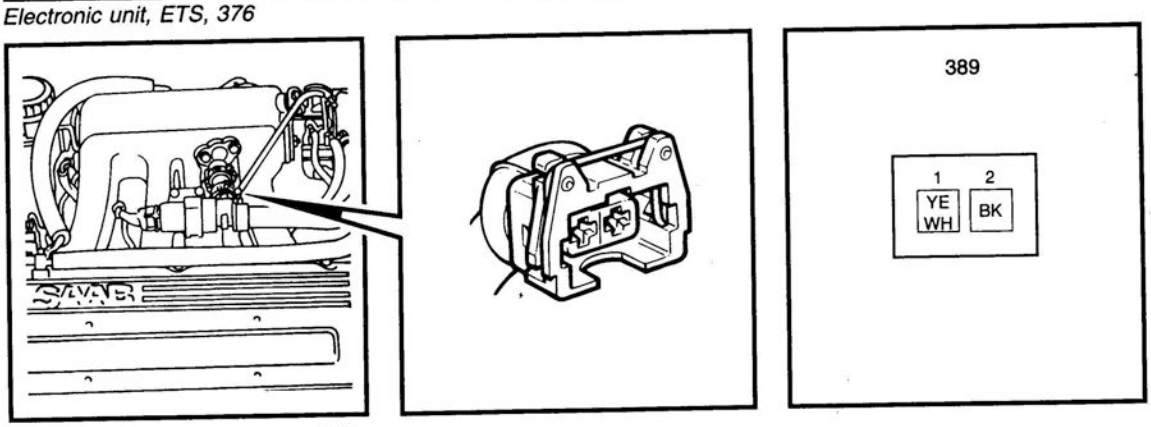

Intake air temperature sensor, 389

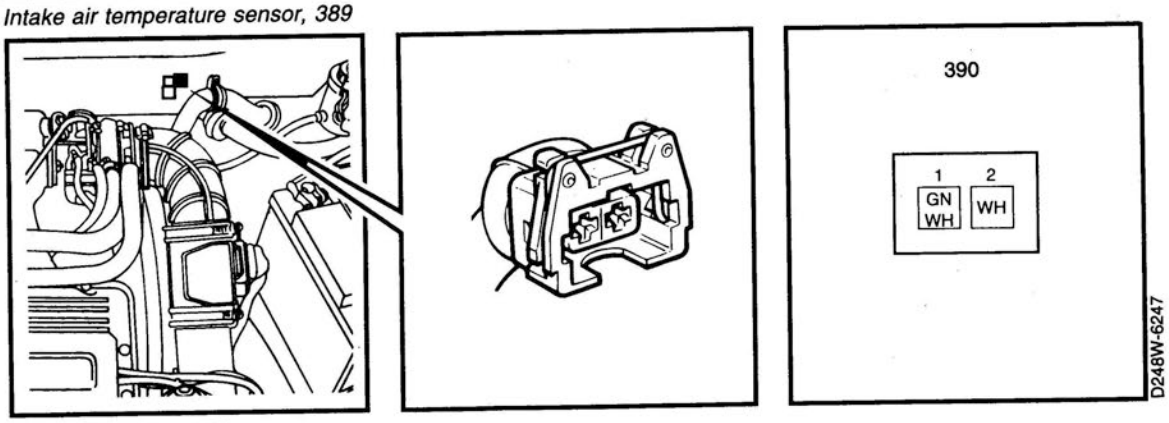

Modulating valve, 390

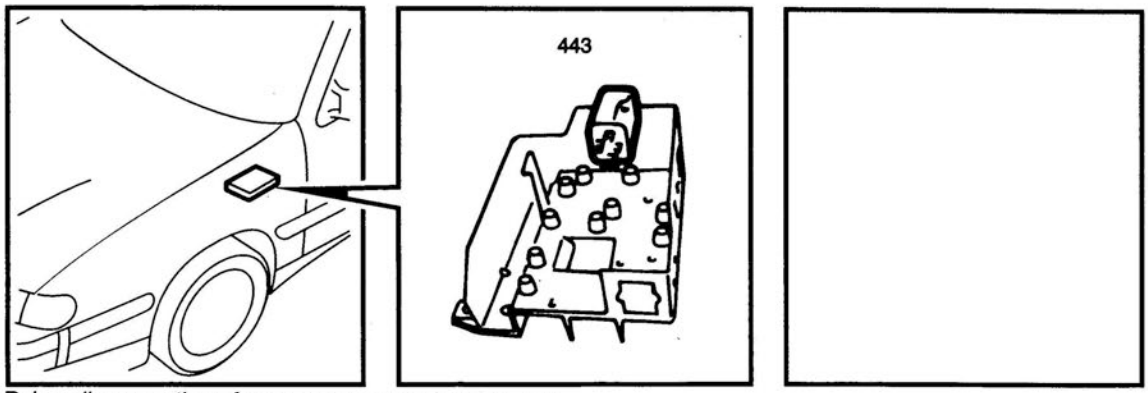

Relay, disconnection of oxygen sensor preheating, 443

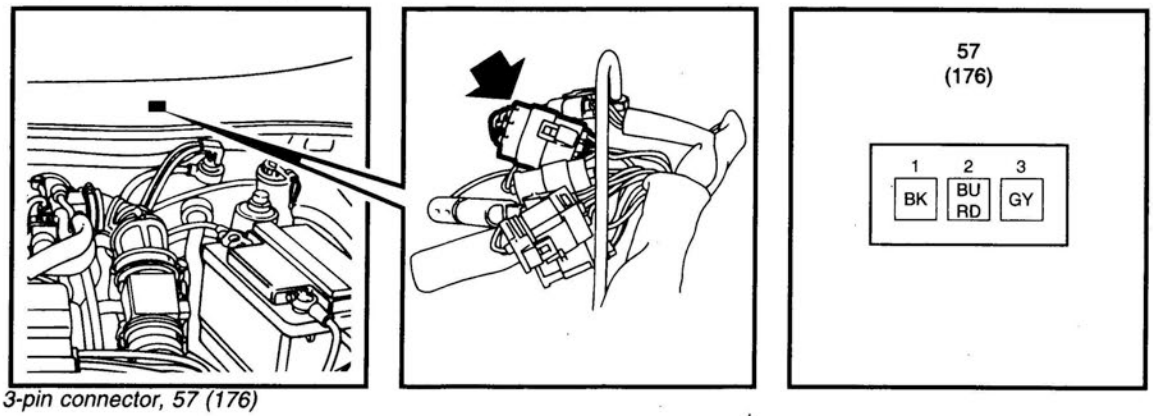

3-pin connector, 57 (176)

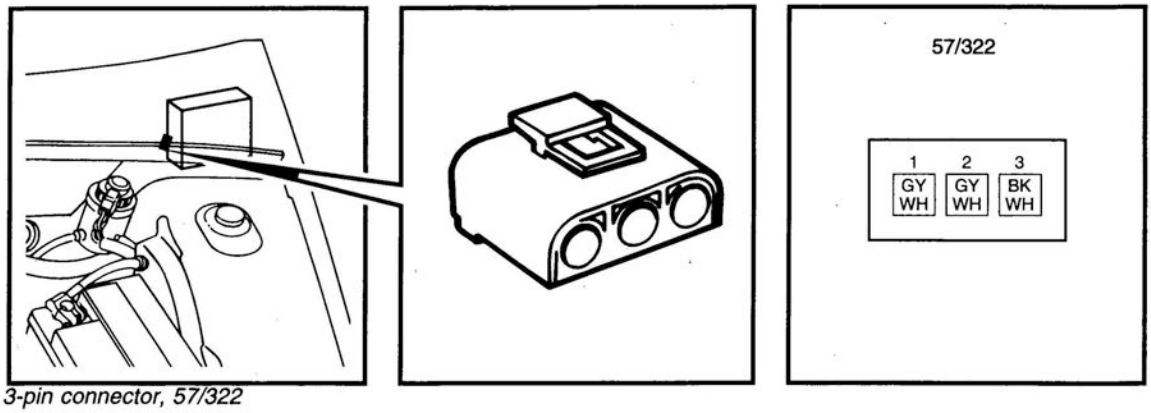

3-pin connector, 57/322

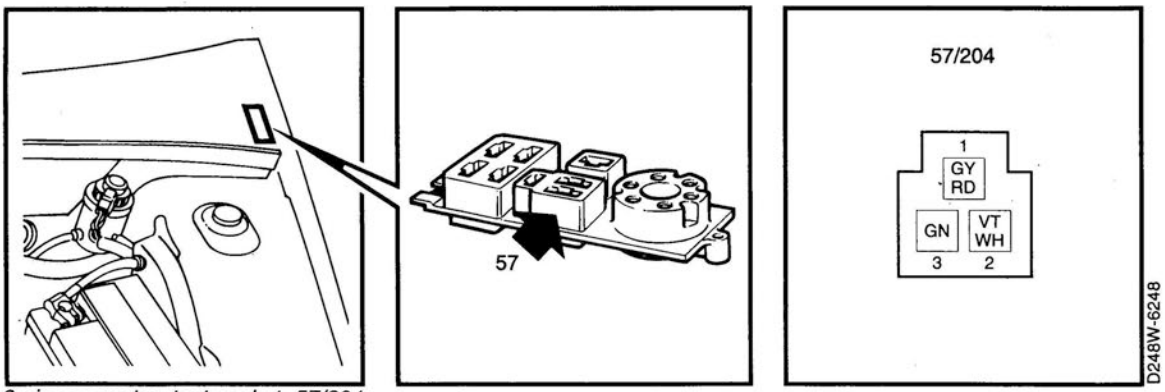

3-pin connector, test socket, 57/204

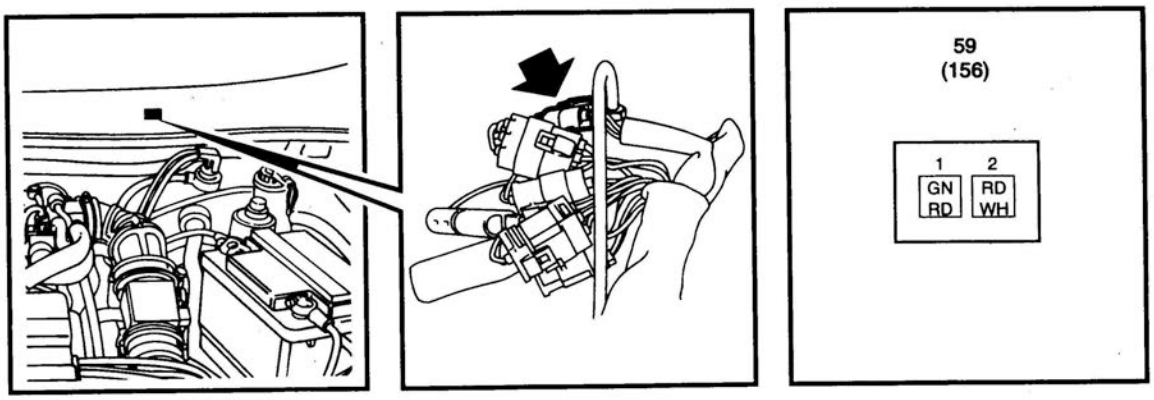

2-pin connector, 59 (156)

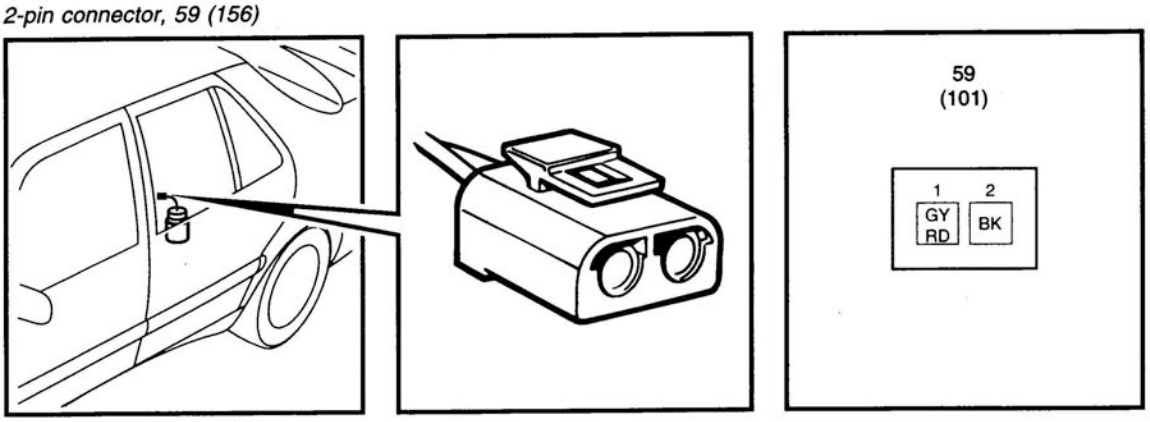

2-pin connector, 59 (101)

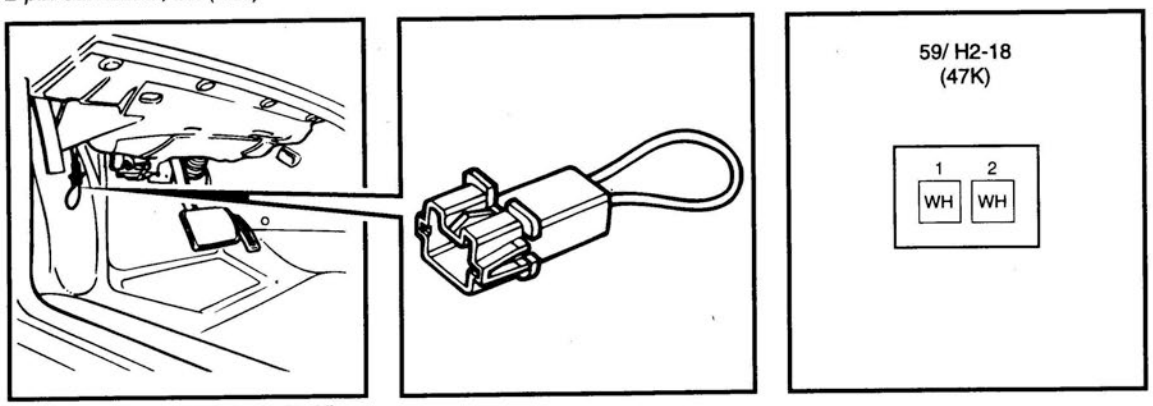

2-pin connector, 59/H2-18 (47K)

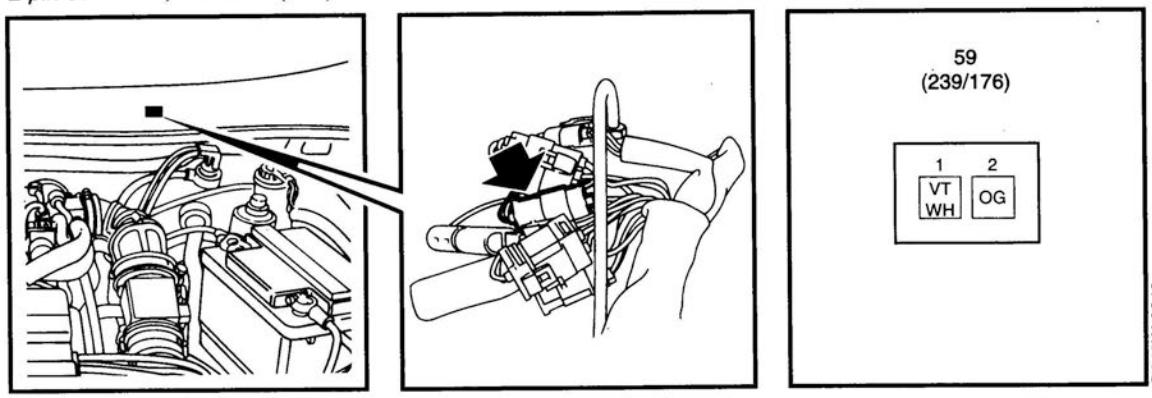

2-pin connector, 59 (239/176)

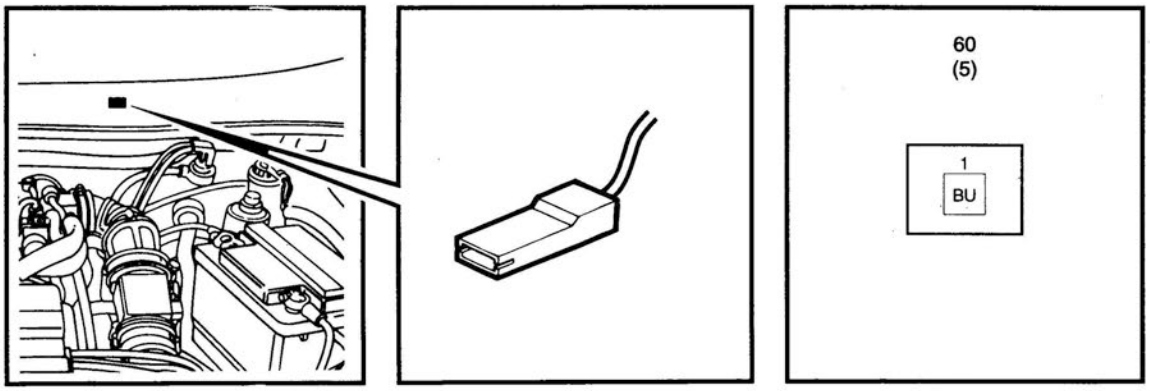

Single-pole connector, 60 (5)

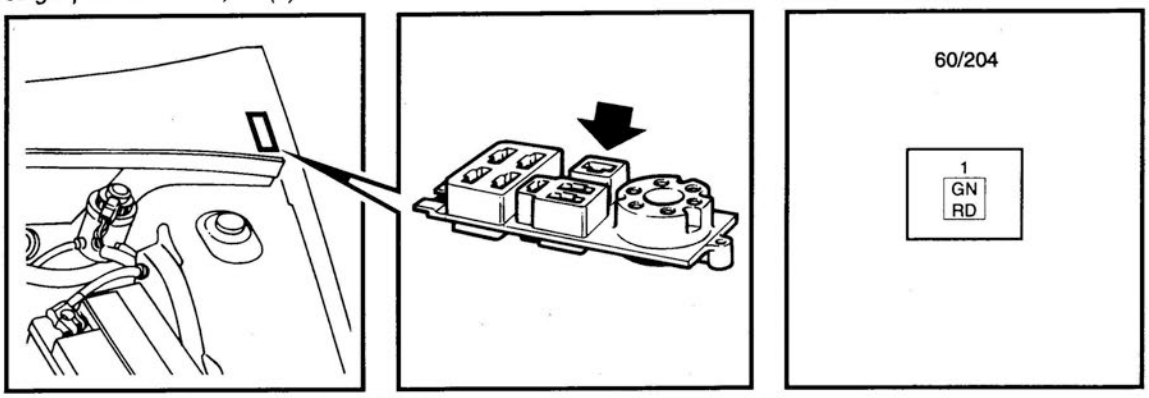

Single-pole connector, test socket, 60/204

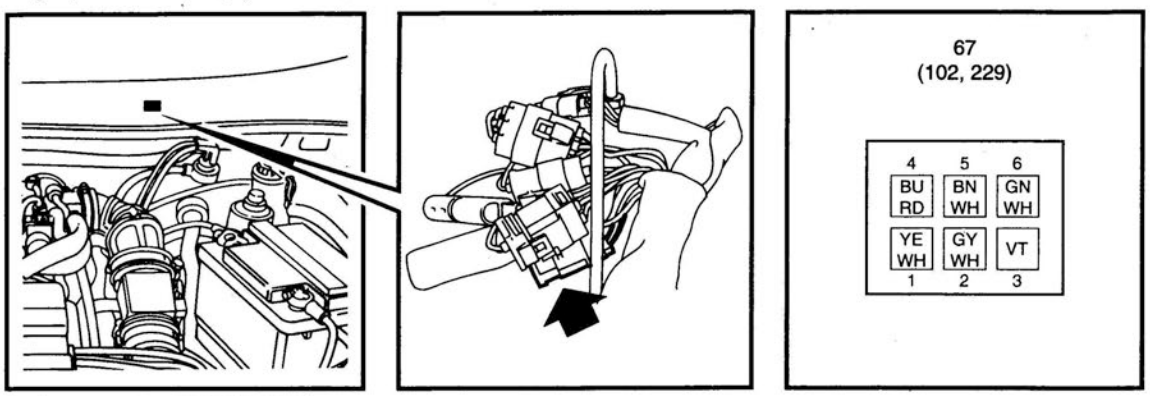

6-pin connector, 67 (102, 229)

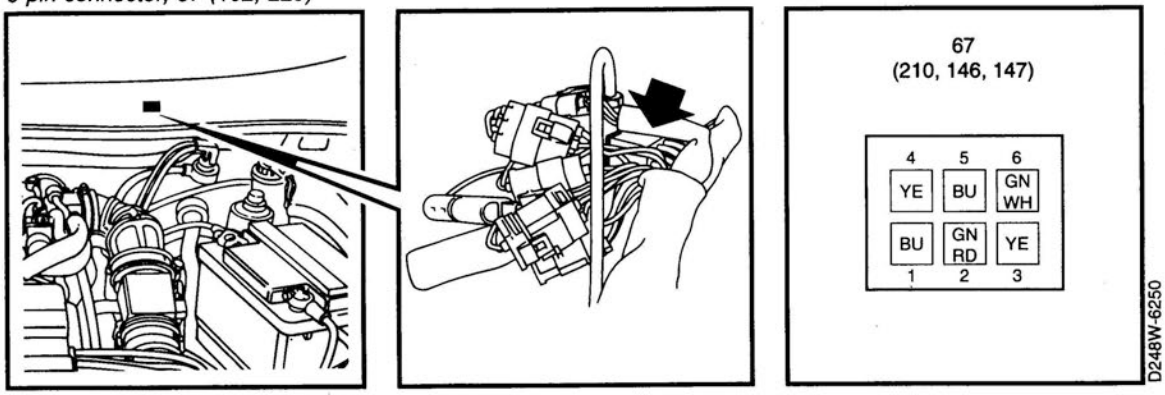

6-pin connector, 67 (210, 146, 147)

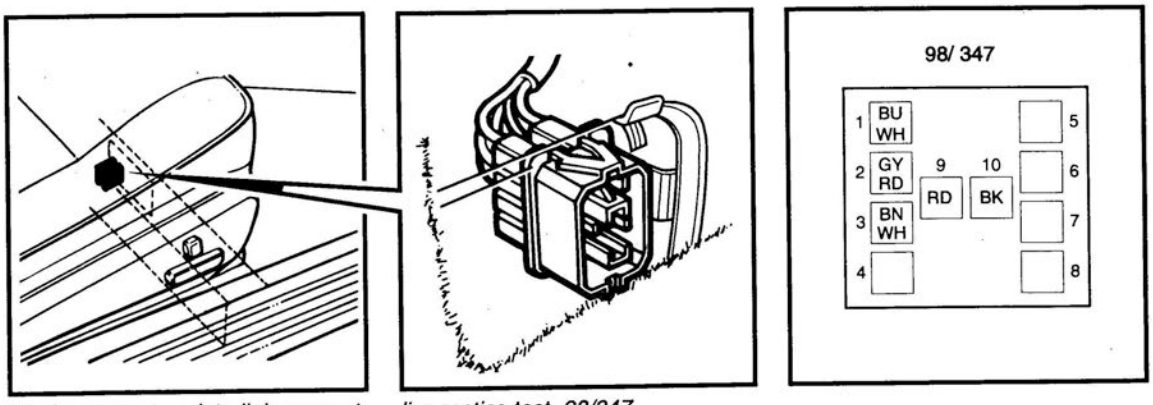

10-pin connector, data link connector, diagnostics test, 98/347

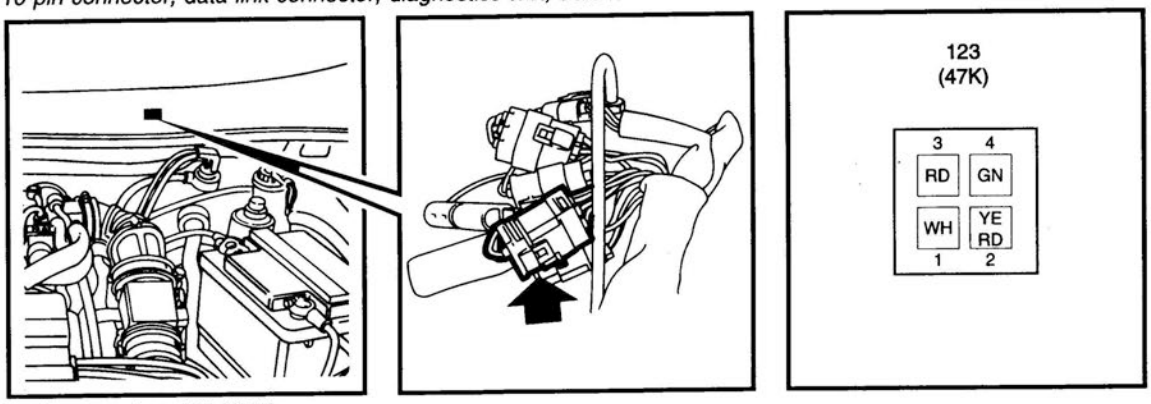

4-pin connector, 123 (47K)

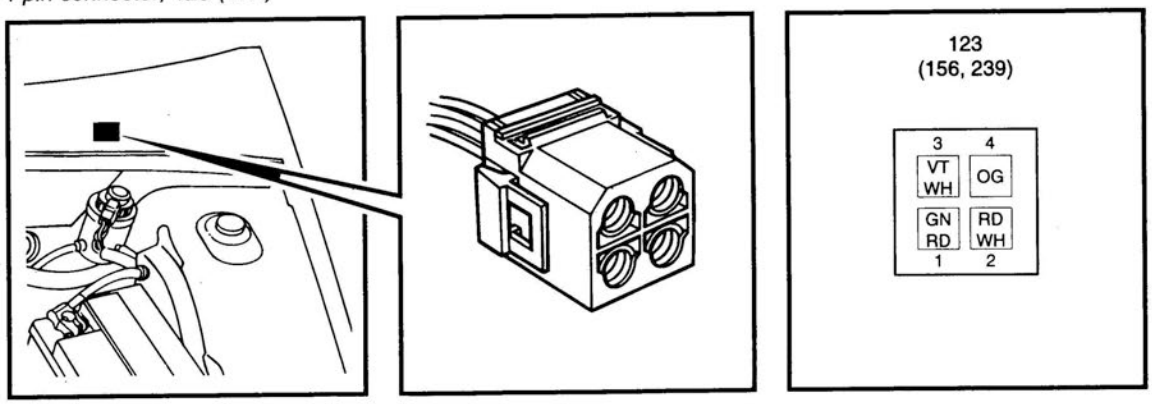

4-pin connector, 123 (156, 239)

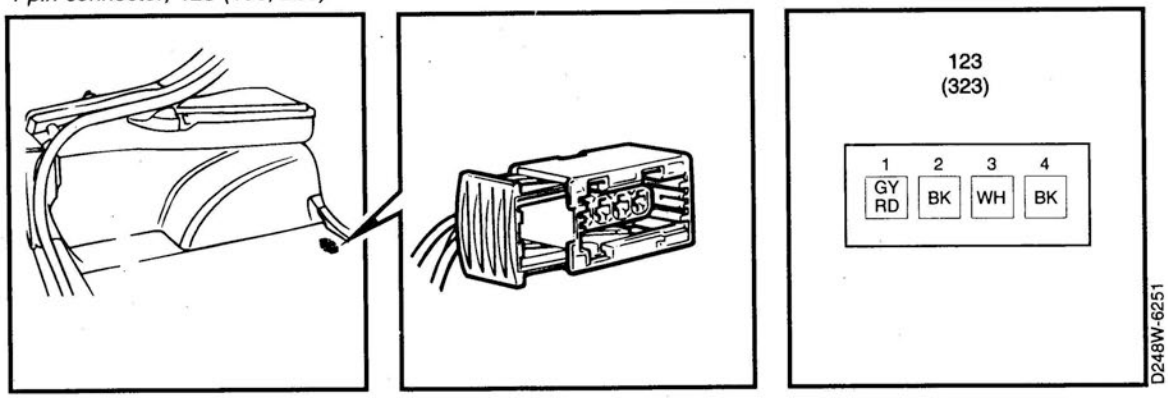

4-pin connector, 123 (323)

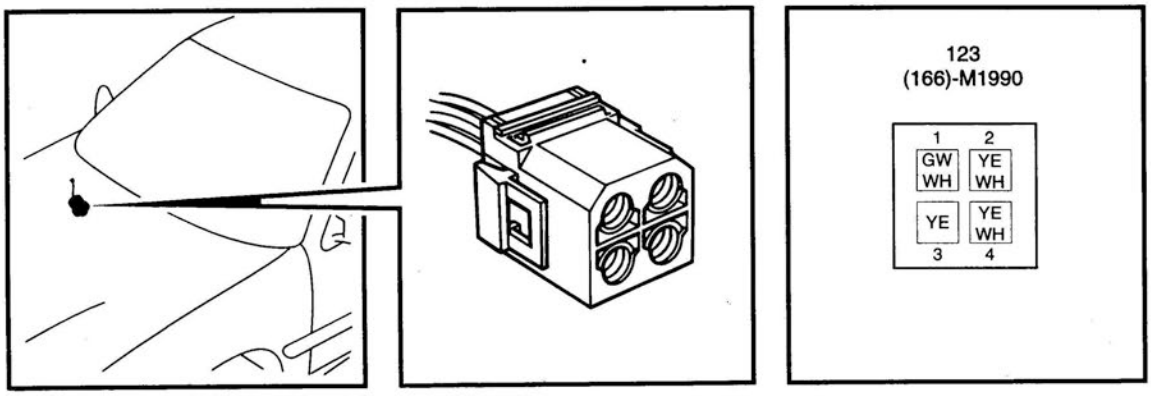

4-pin connector, -M1990, 123 (166)

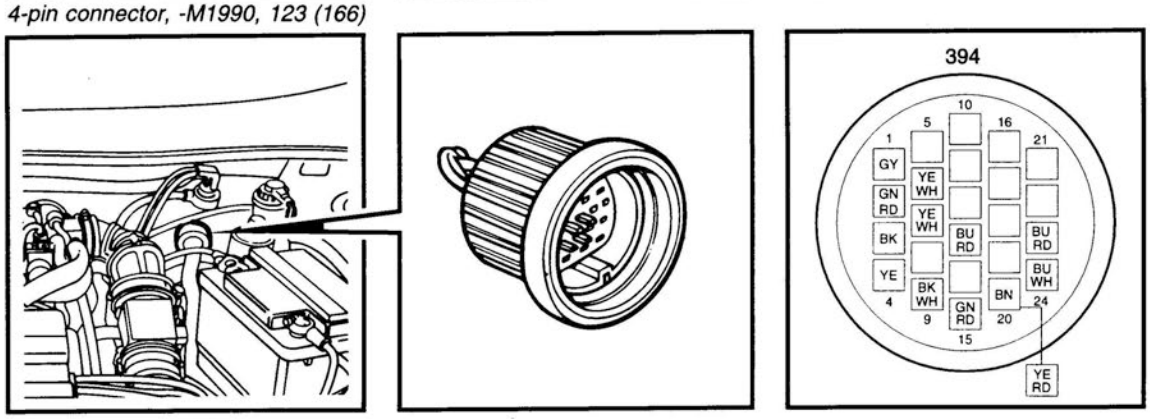

24-pin connector, 394

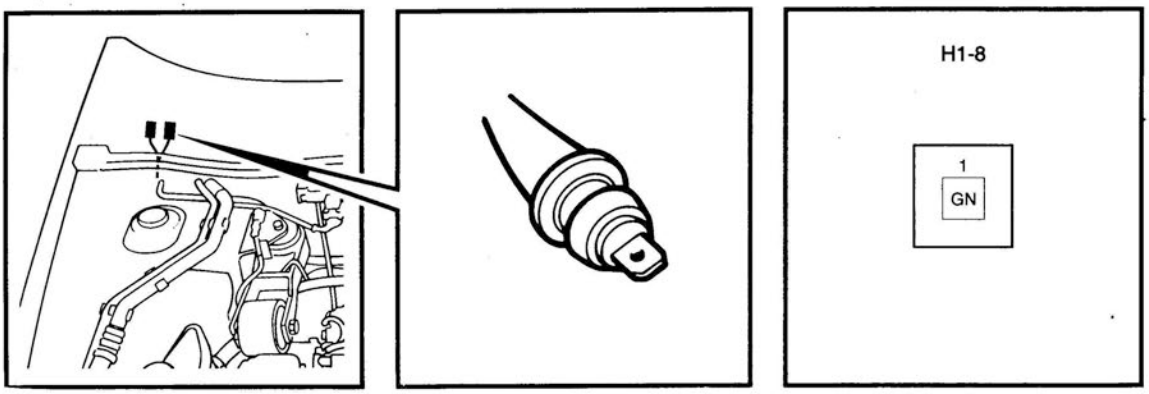

Single-pole connector in engine bay behind bulkhead partition, H1-8

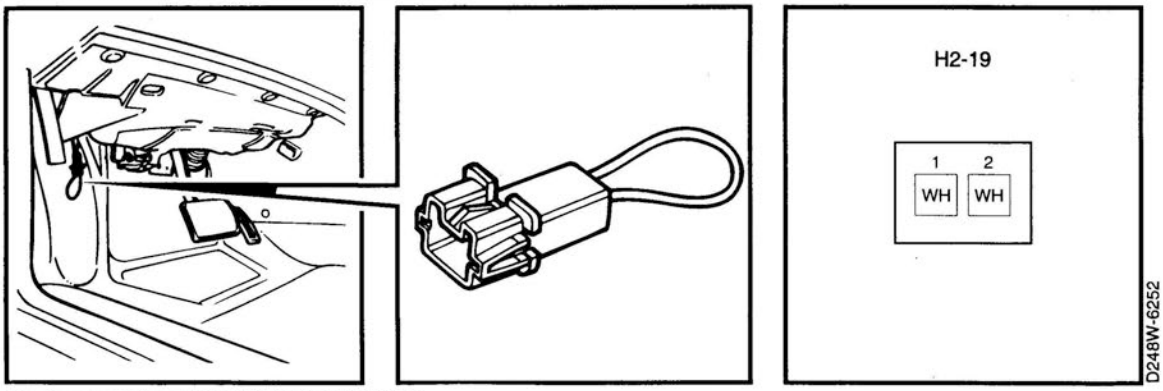

2-pin connector under dashboard, H2-19

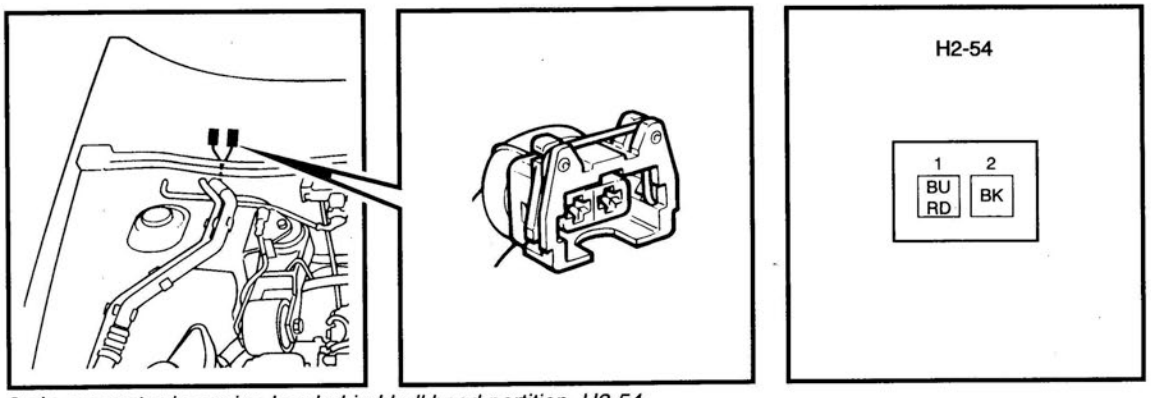

2-pin connector in engine bay behind bulkhead partition, H2-54

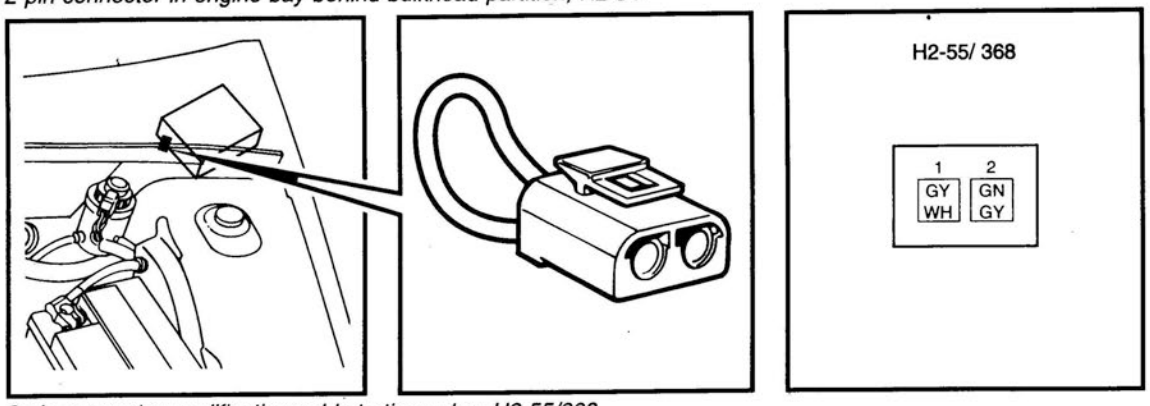

2-pin connector, codification cold-starting valve, H2-55/368

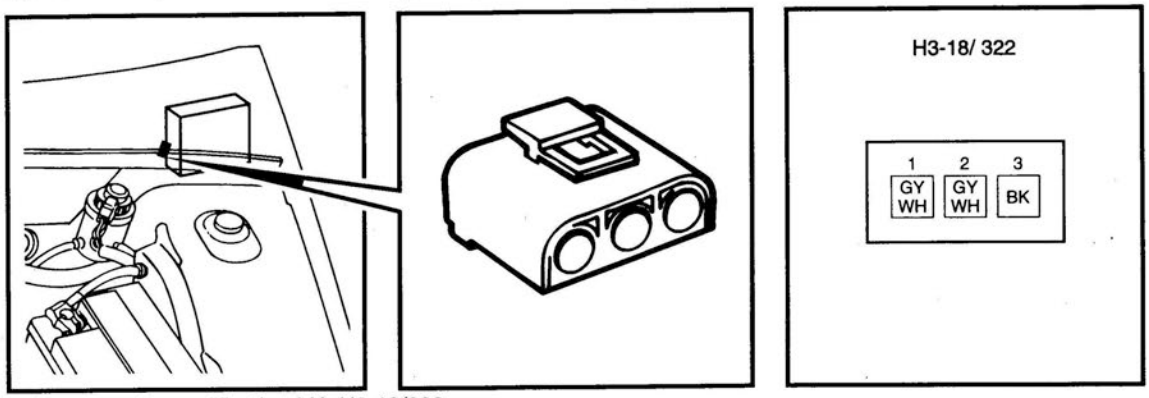

3-pin connector, codification LH, H3-18/322

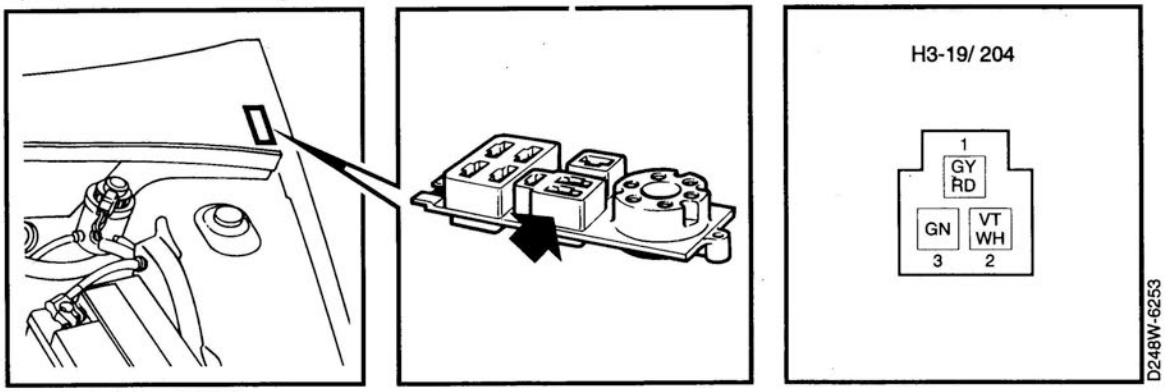

Test socket, H3-19/204

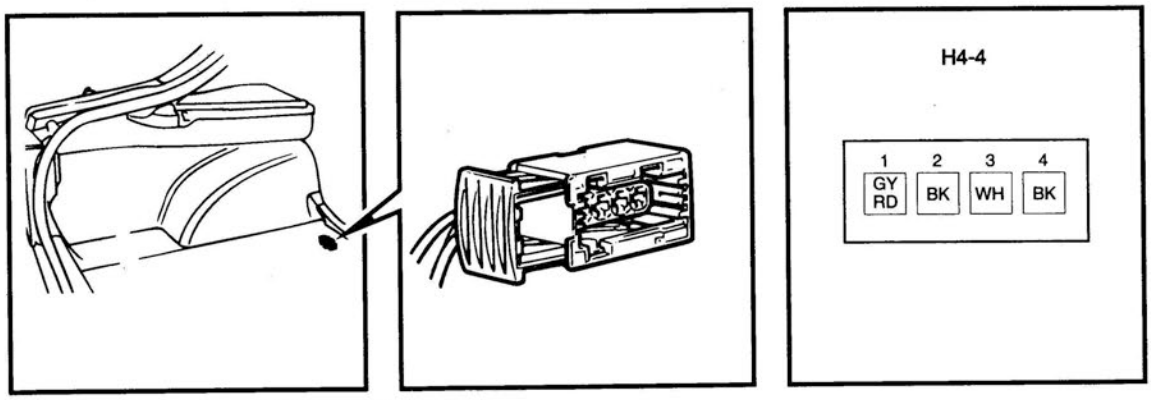

4-pin connector adjacent to fuel pump, H4-4

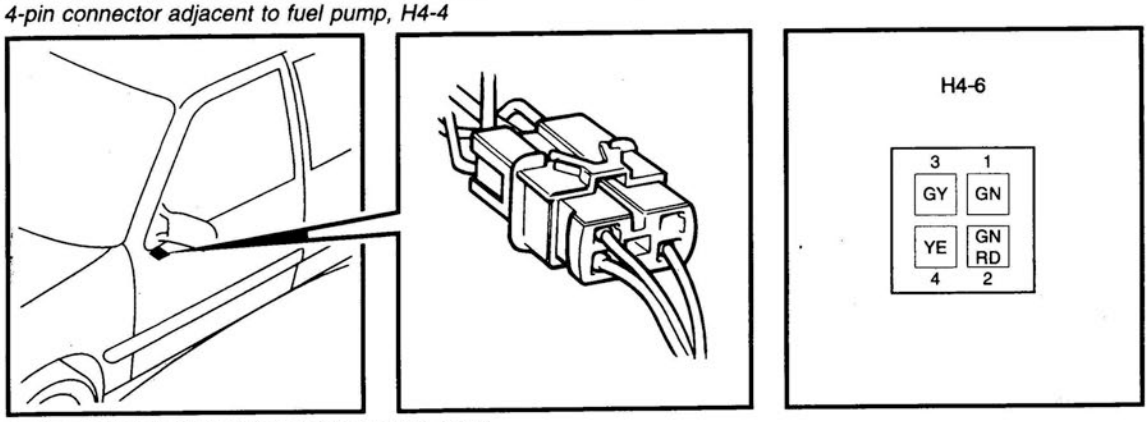

4-pin connector under left-hand front seat, H4-6

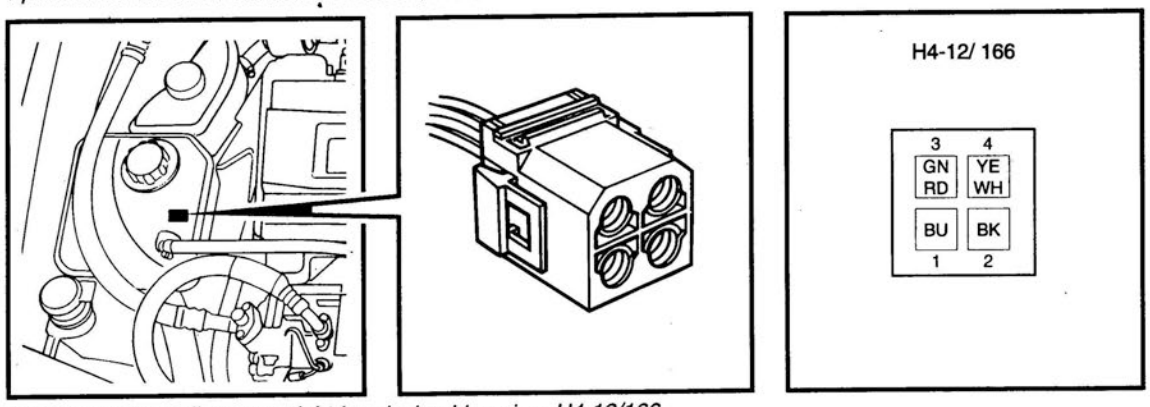

4-pin connector adjacent to right-hand wheel housing, H4-12/166

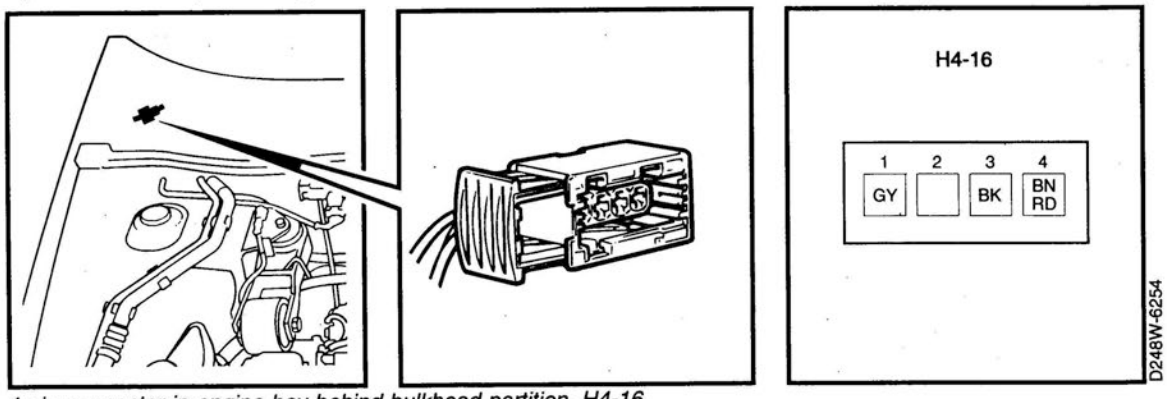

4-pin connector in engine bay behind bulkhead partition, H4-16

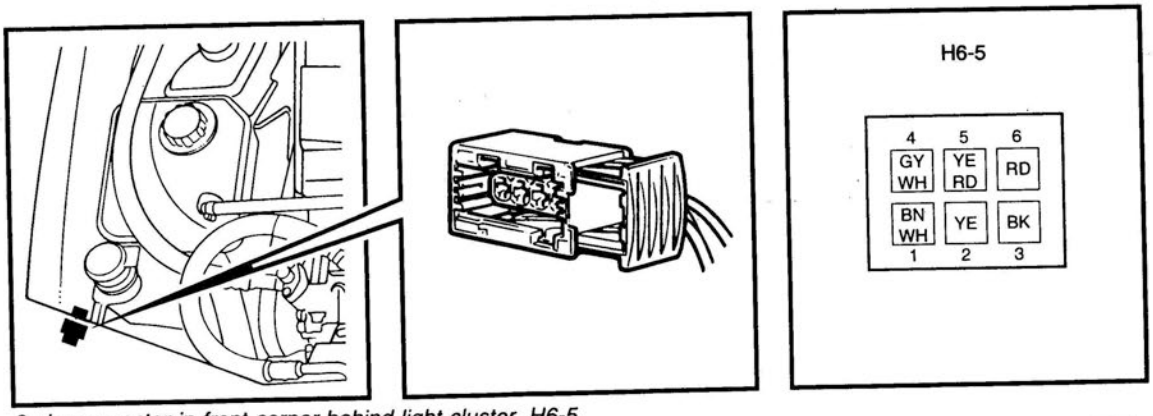

6-pin connector in front corner behind light cluster, H6-5

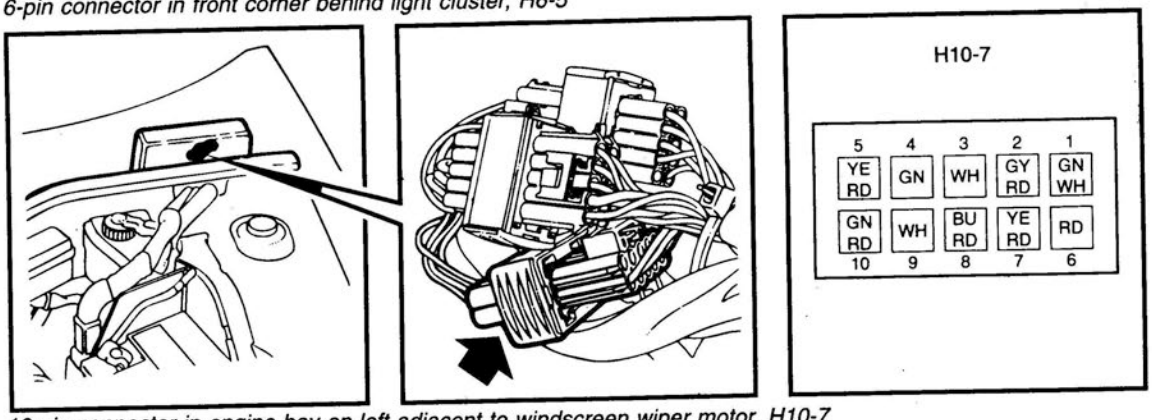

10-pin connector in engine bay on left adjacent to windscreen wiper motor, H10-7

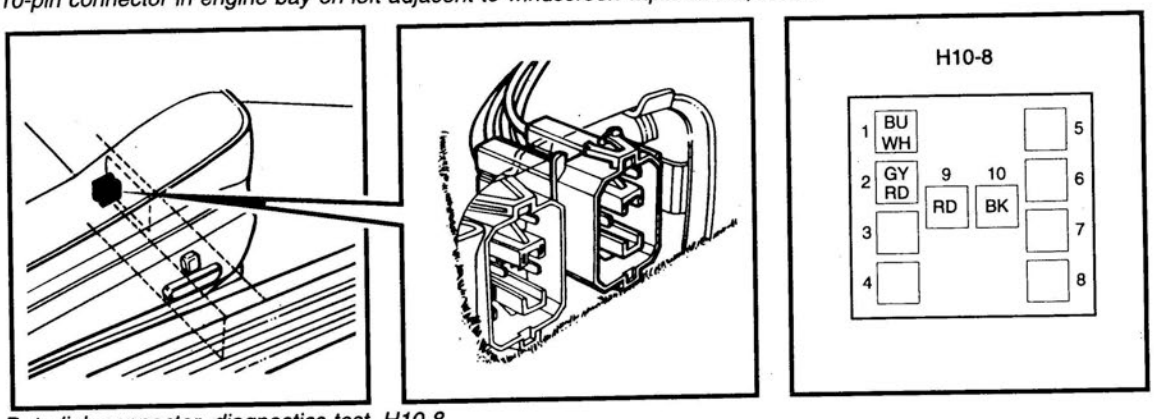

Data link connector, diagnostics test, H10-8

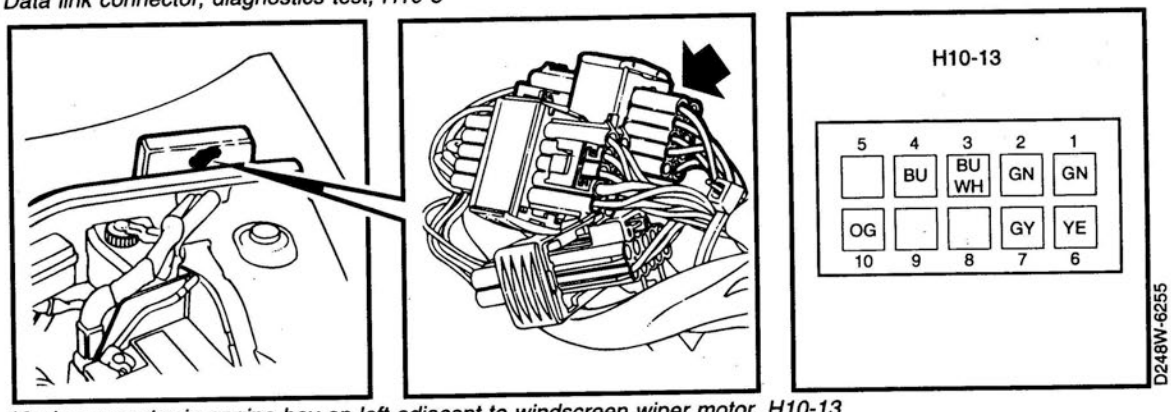

10-pin connector in engine bay on left adjacent to windscreen wiper motor, H10-13

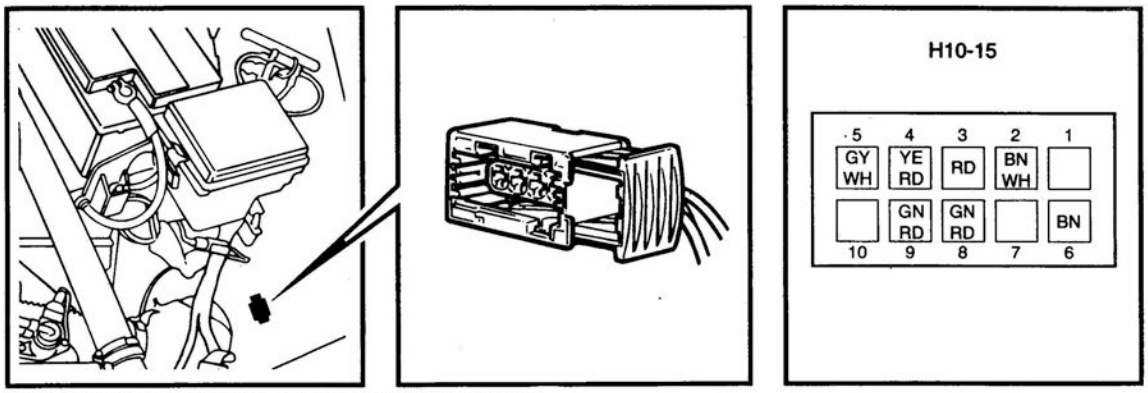

10-pin connector behind left-hand headlamp, H10-15

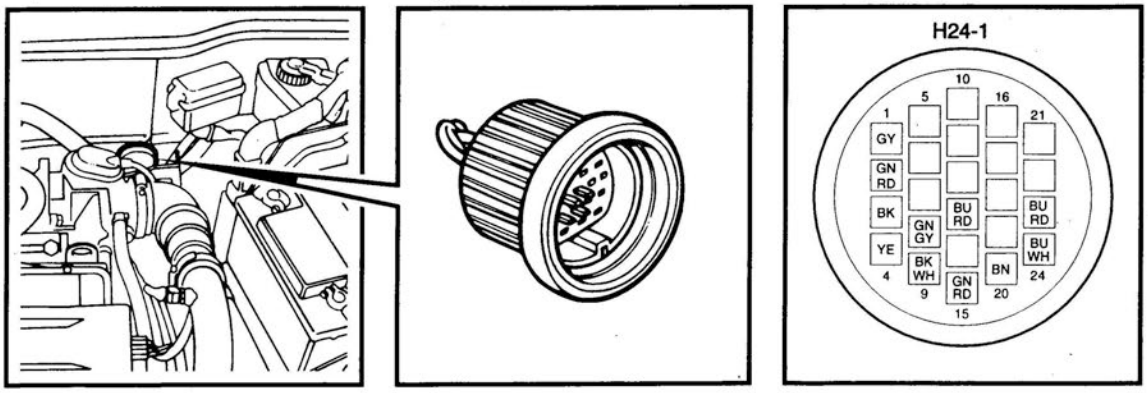

24-pin connector in engine bay on bulkhead partition, H24-1

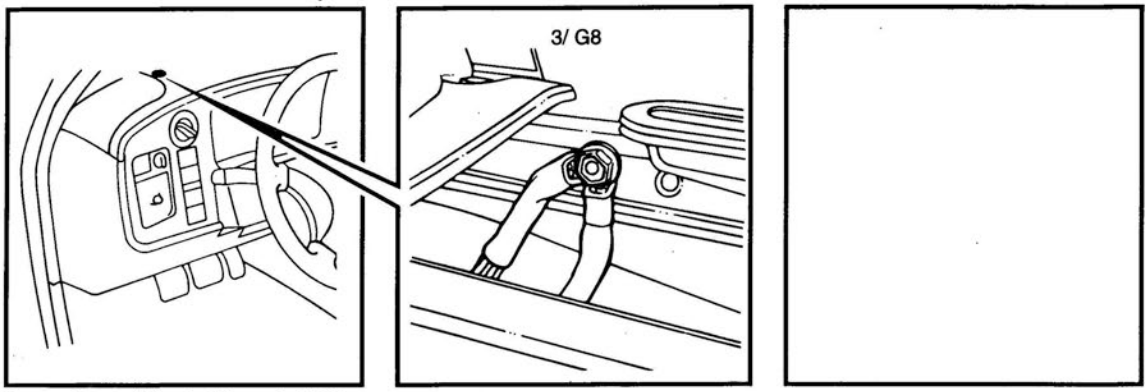

Grounding point, dashboard, 3/G8

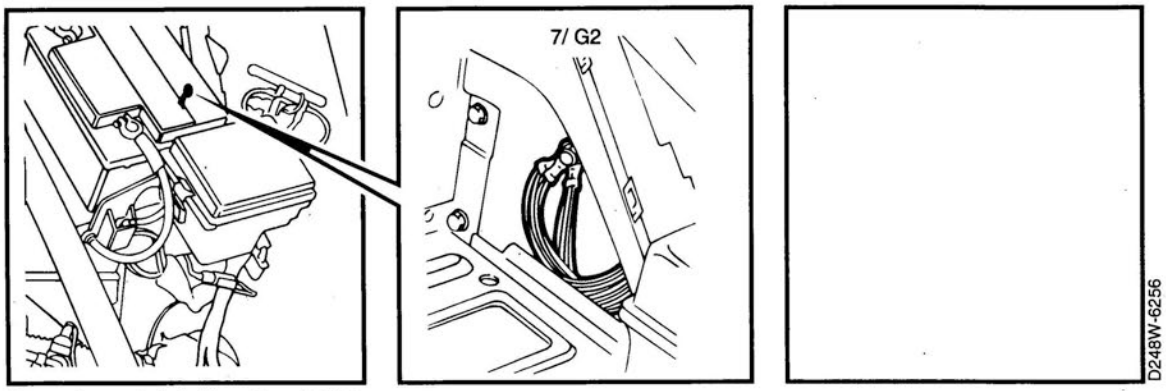

Grounding point, battery tray, 7/G2

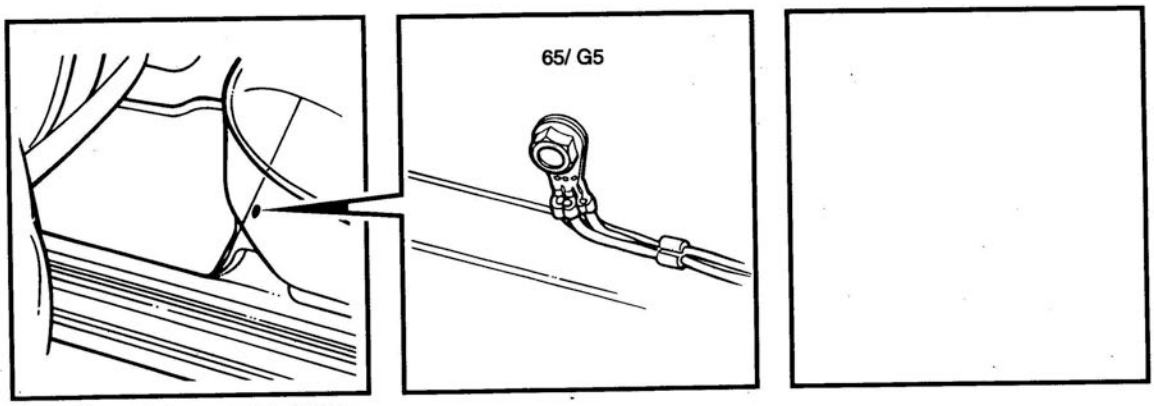

Grounding point, rear seat, 65/G5

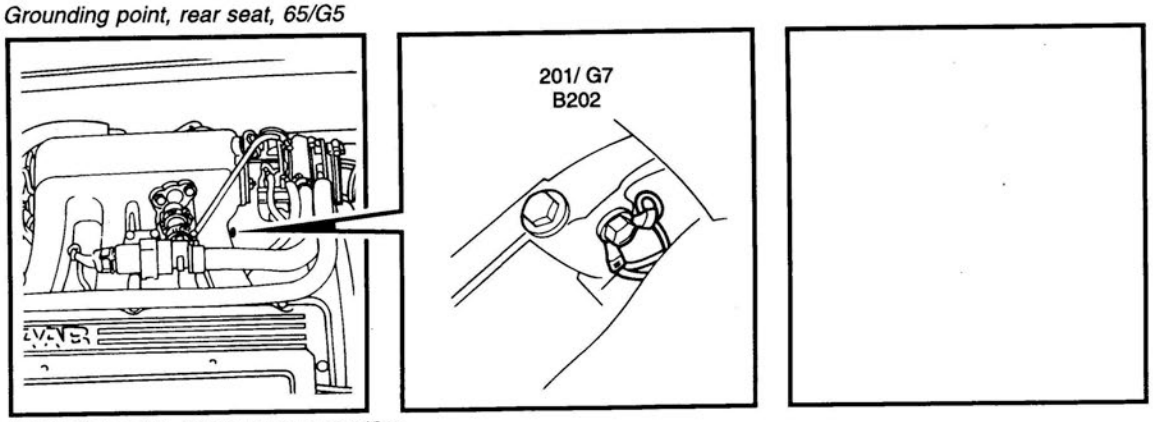

Grounding point, B202 engine, 201/G7

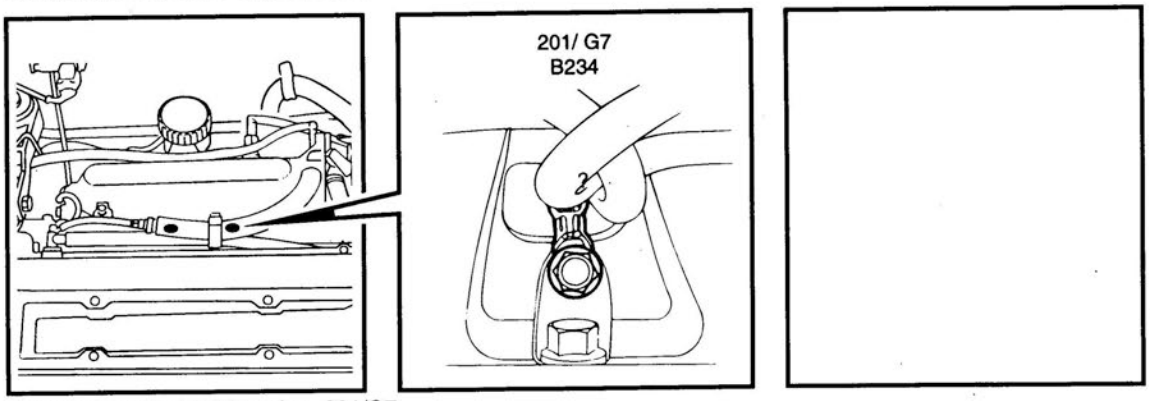

Grounding point, B234 engine, 201/G7

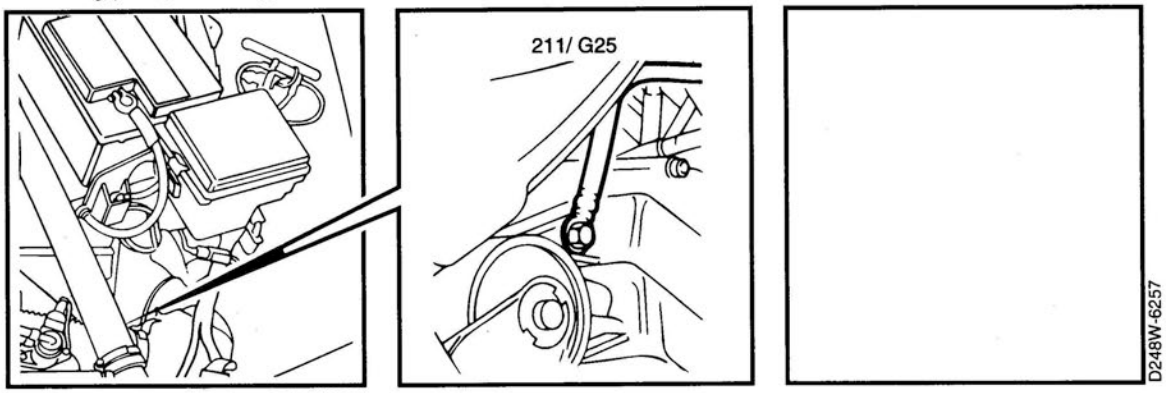

Grounding point, gearbox, 211/G25

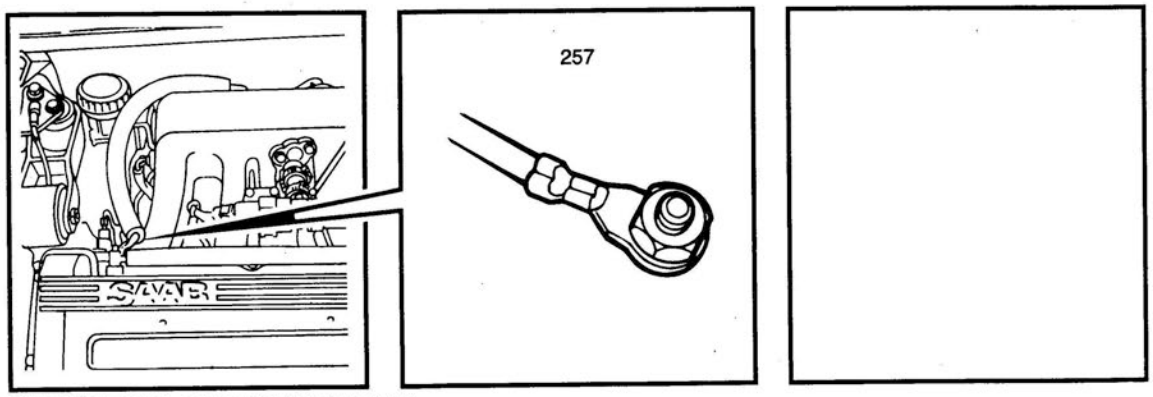

Grounding point, generator bracket, 257

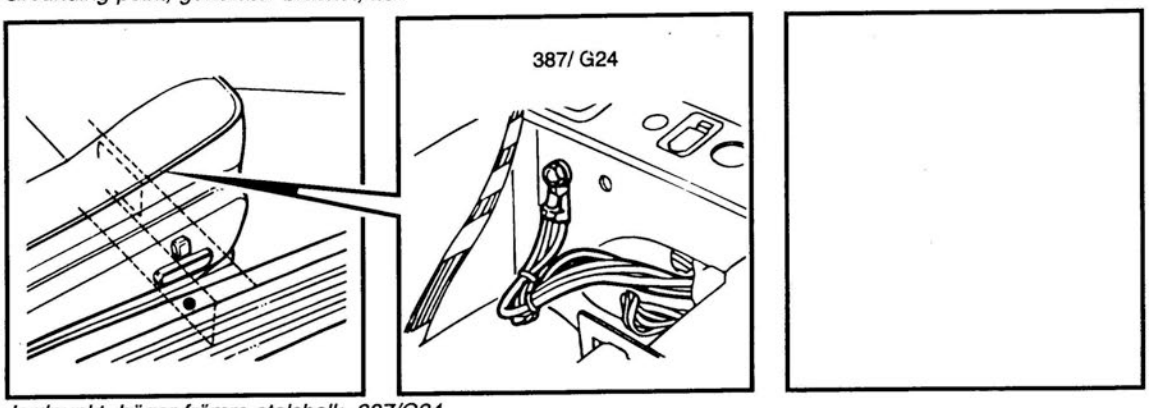

Jordpunkt, höger främre stolsbalk, 387/G24

Wiring diagram

1985 9000 LH 2.2 270

1986 9000 LH 2.2 271

1987-1988 9000 Turbo with cat. LH 2.2 272
1987-1988 9000 Turbo without cat. LH 2.2 273
1987 9000i with cat. LH 2.2 274
1987-1988 9000i without cat. LH 2.2. 275
1988 9000i with cat. LH 2.4 276

1989 9000 Turbo with cat. (SE, EU, AU JP) LH 2.4. 277
1989 9000 Turbo with cat. (US, CA) LH 2.4. 278
1989 9000 Turbo without cat. LH 2.2 279
1989 9000i with cat. LH 2.4 280
1989 9000i without cat. LH 2.2. 281

1990 9000 Turbo with cat. (SE, EU, AU, JP, US, CA) LH 2.4. 282
1990 9000 Turbo without cat. LH 2.2 283
1990 9000i with cat. LH 2.4/9000 2.3i with cat. LH 2.4.1 284
1990 9000i without cat. LH 2.2. 285

1991 9000 Turbo with cat. DI/APC LH 2.4. 286
1991 9000 Turbo and 9000i DI/APC, DI LH 2.4.2 287
1991 9000 Turbo ETS LH 2.4 and 2.4.2 288
1991 9000i with cat. EZK LH 2.4. 289
1991 9000i without cat. EZK LH 2.4.2 290

1992 9000 Turbo with cat. DI/APC LH 2.4. 291
1992 9000 Turbo with cat. DI/APC ETS LH 2.4 292
1992 9000 Turbo with cat. DI/APC ETS LH 2.4.2 293
1992 9000 Turbo and 9000i DI/APC, DI LH 2.4.2 294
1992 9000i with cat. EZK LH 2.4. 295
1992 9000i without cat. EZK LH 2.4.2 296

1993 9000 Turbo with cat. DI/APC LH 2.4. 297
1993 9000 Turbo with cat. DI/APC ETS LH 2.4 298
1993 9000 Turbo with cat. DI/APC ETS LH 2.4.2 299
1993 9000 Turbo and 9000i DI/APC, DI LH 2.4.2 300
1993 9000i with cat. EZK LH 2.4. 301
1993 9000i without cat. EZK LH 2.4.2 302

List of components. 303

1985 9000 LH 2.2

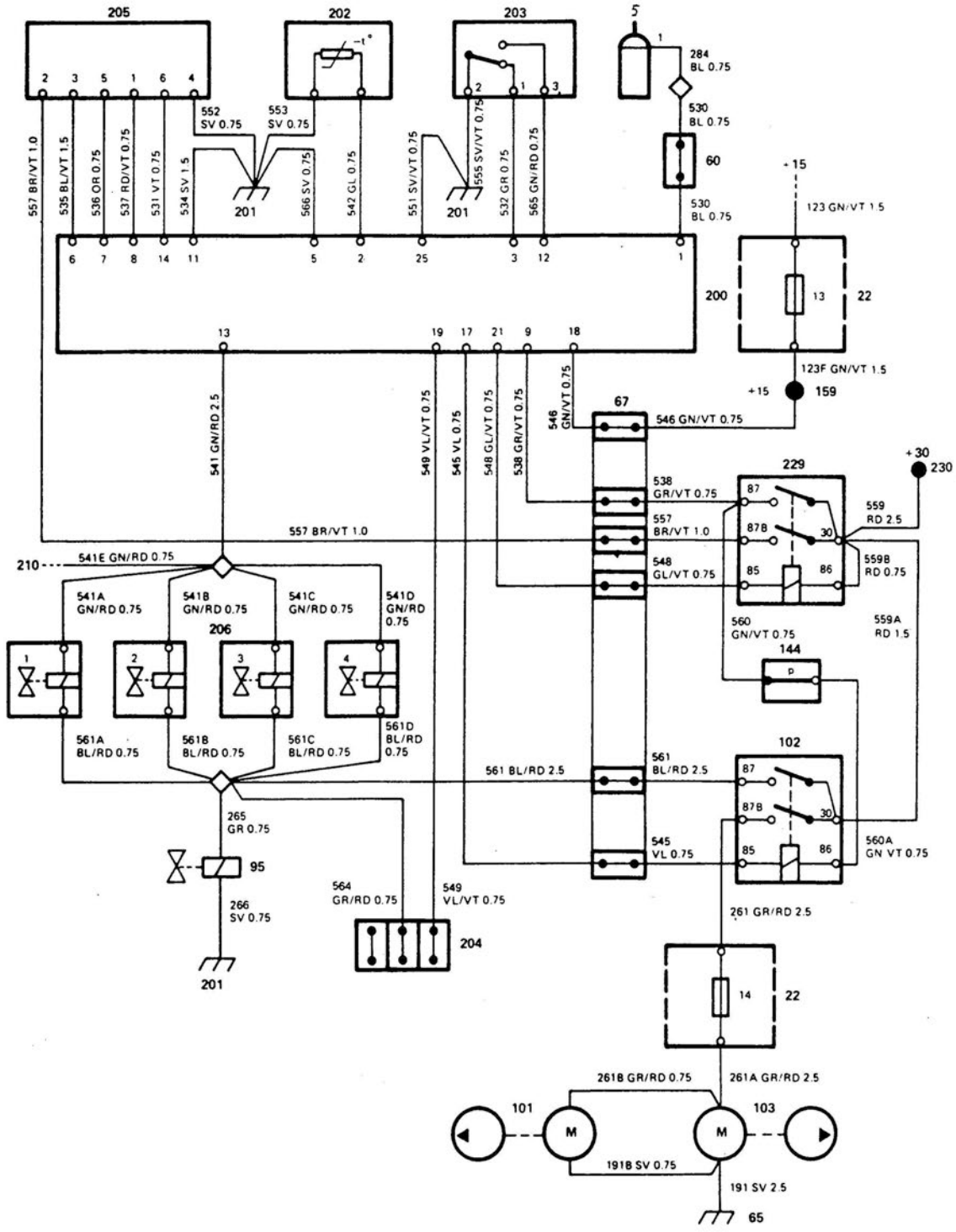

1986 9000 LH 2.2

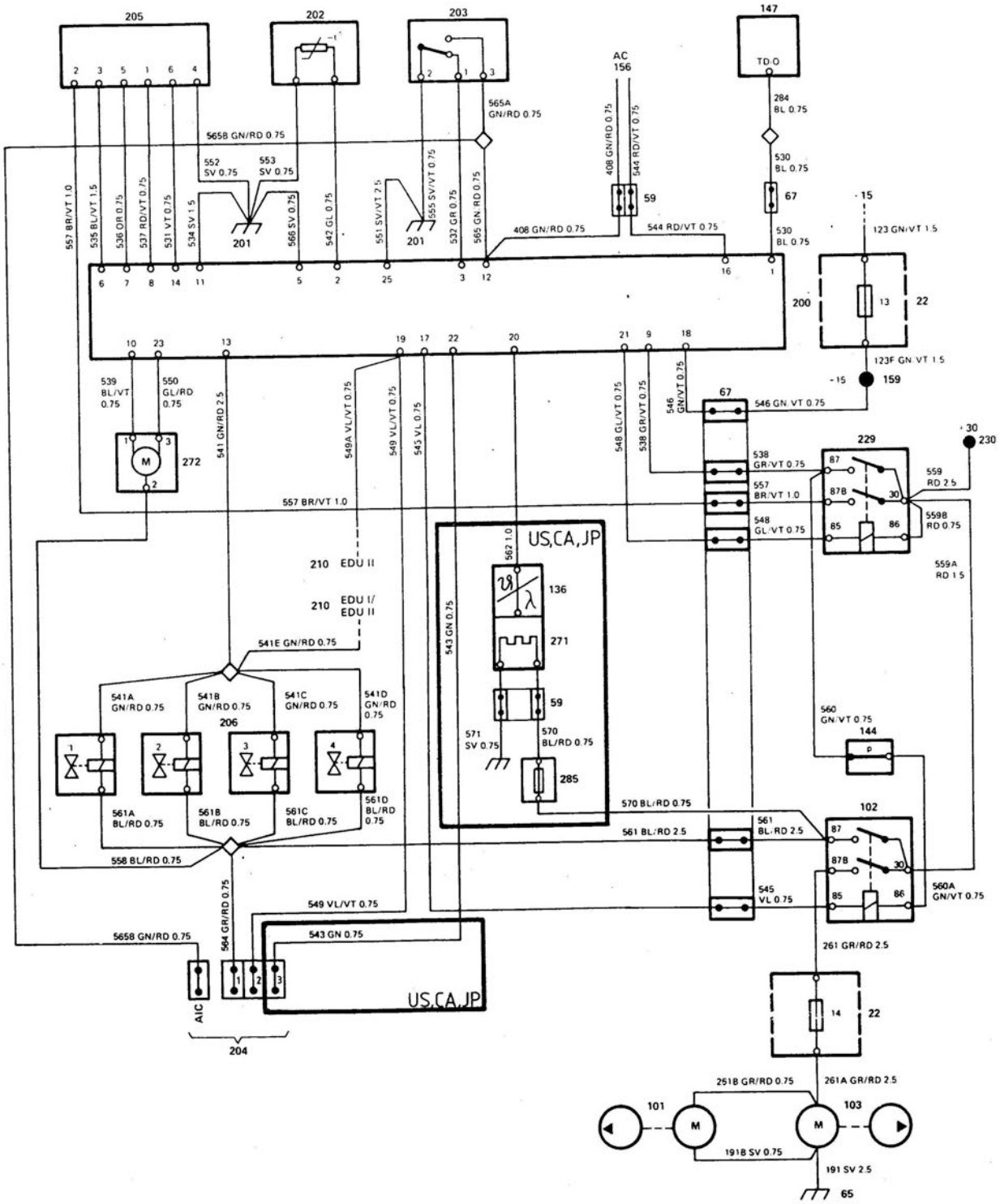

1987-88 9000 Turbo with cat. LH 2.2

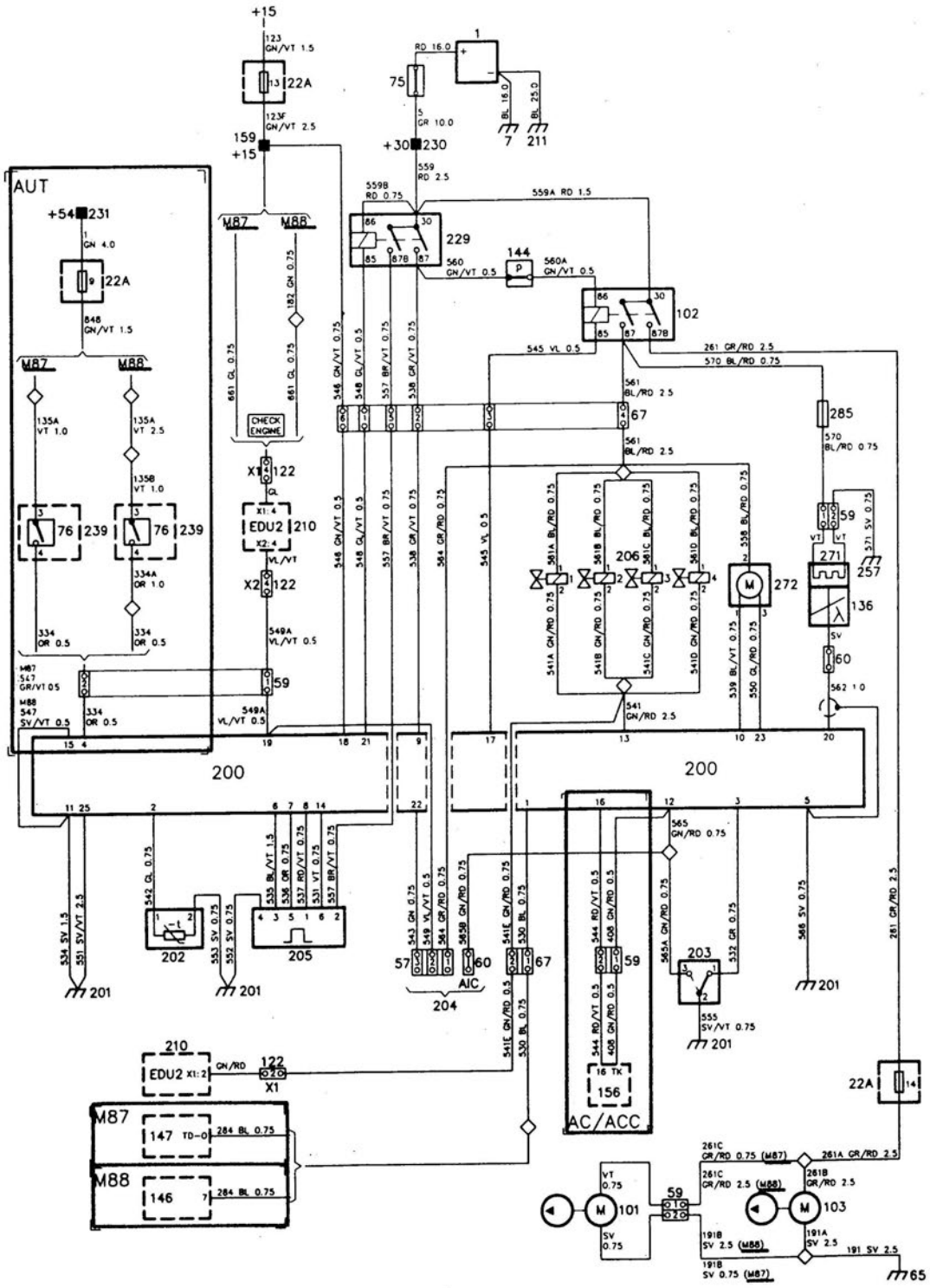

1987-88 9000 Turbo without cat. LH 2.2

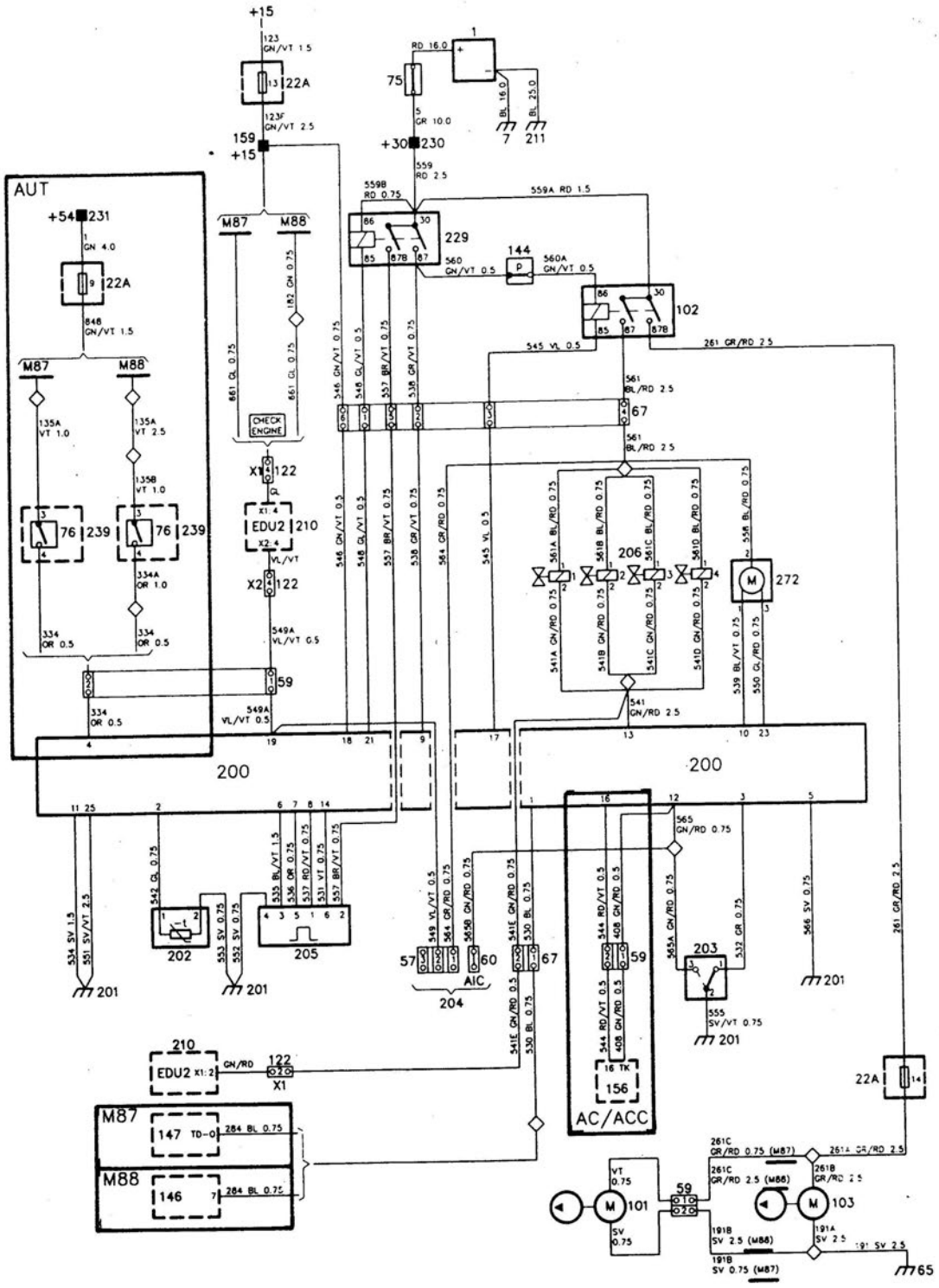

1987 9000i with cat. LH 2.2

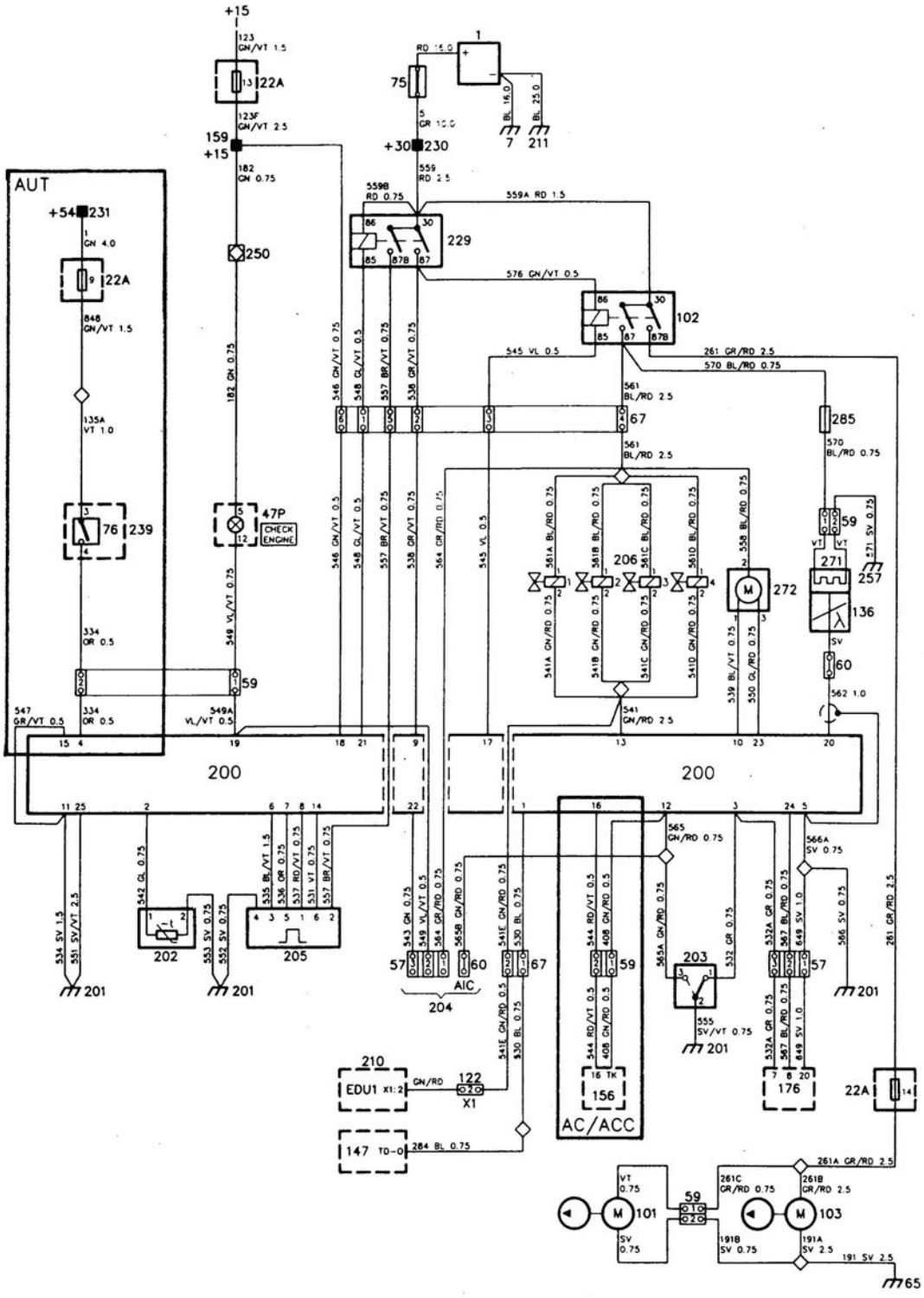

1987-88 9000i without cat. LH 2.2

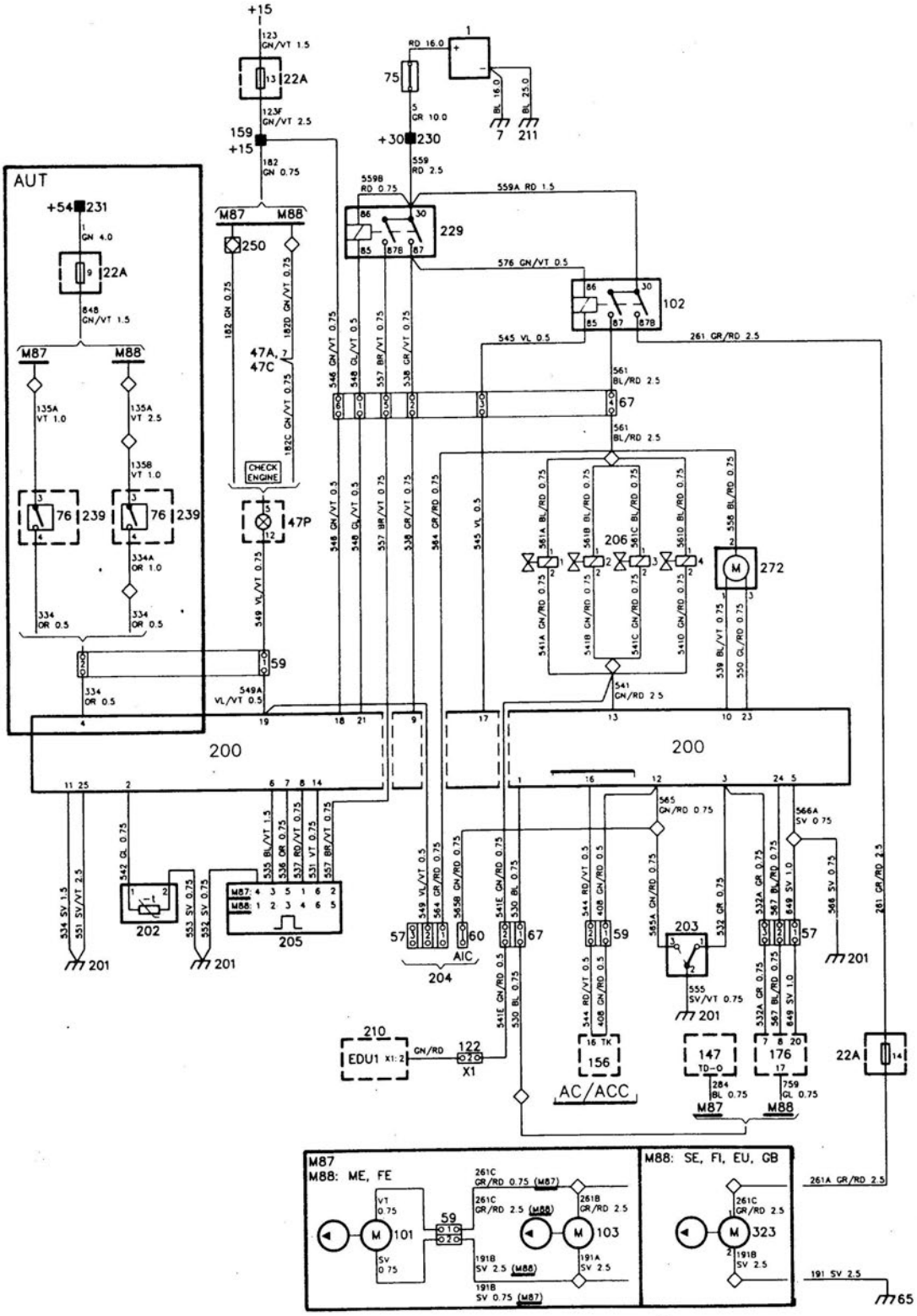

1988 9000i with cat. LH 2.4

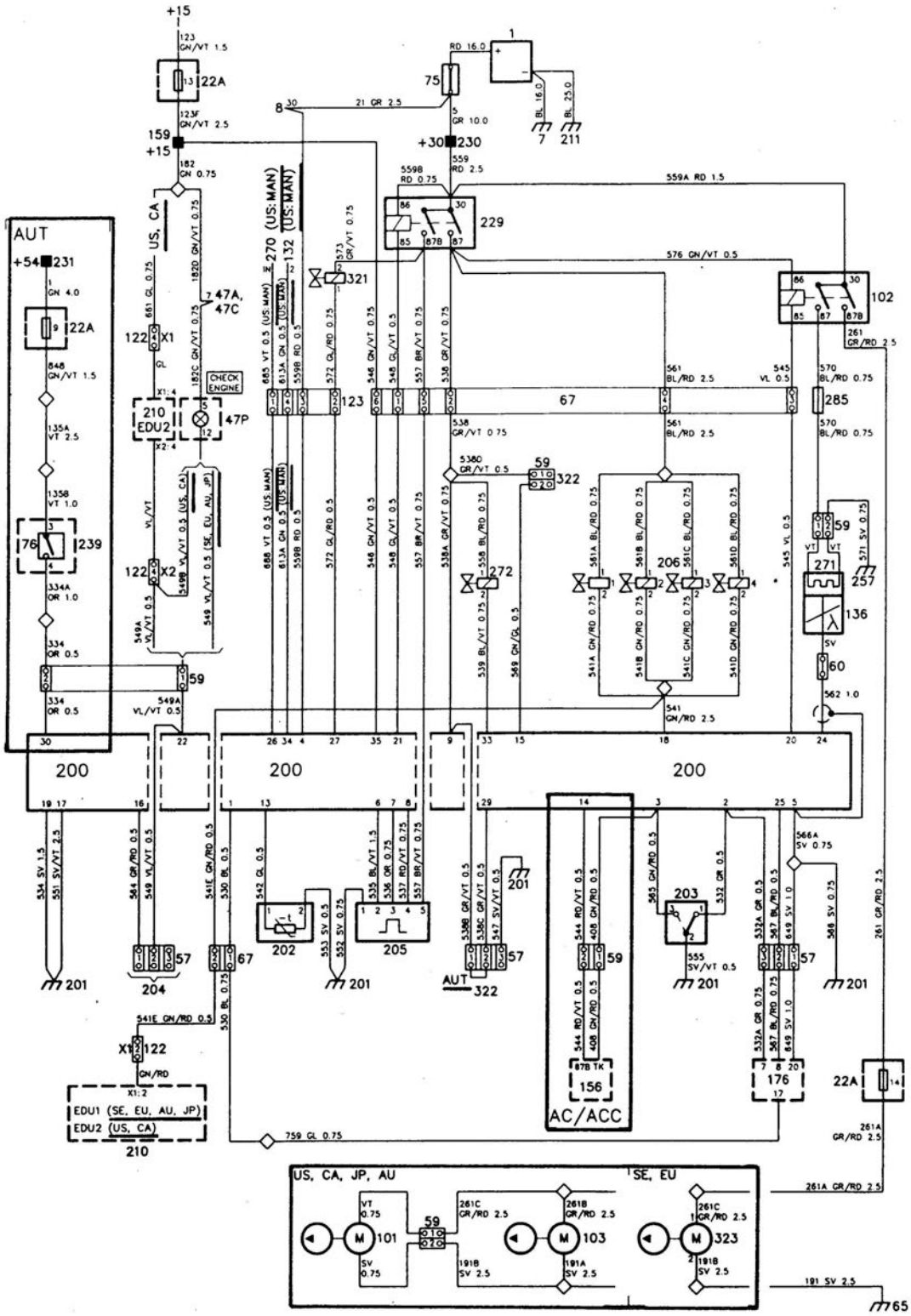

1989 9000 Turbo with cat. (SE, EU, AU, JP) LH 2.4

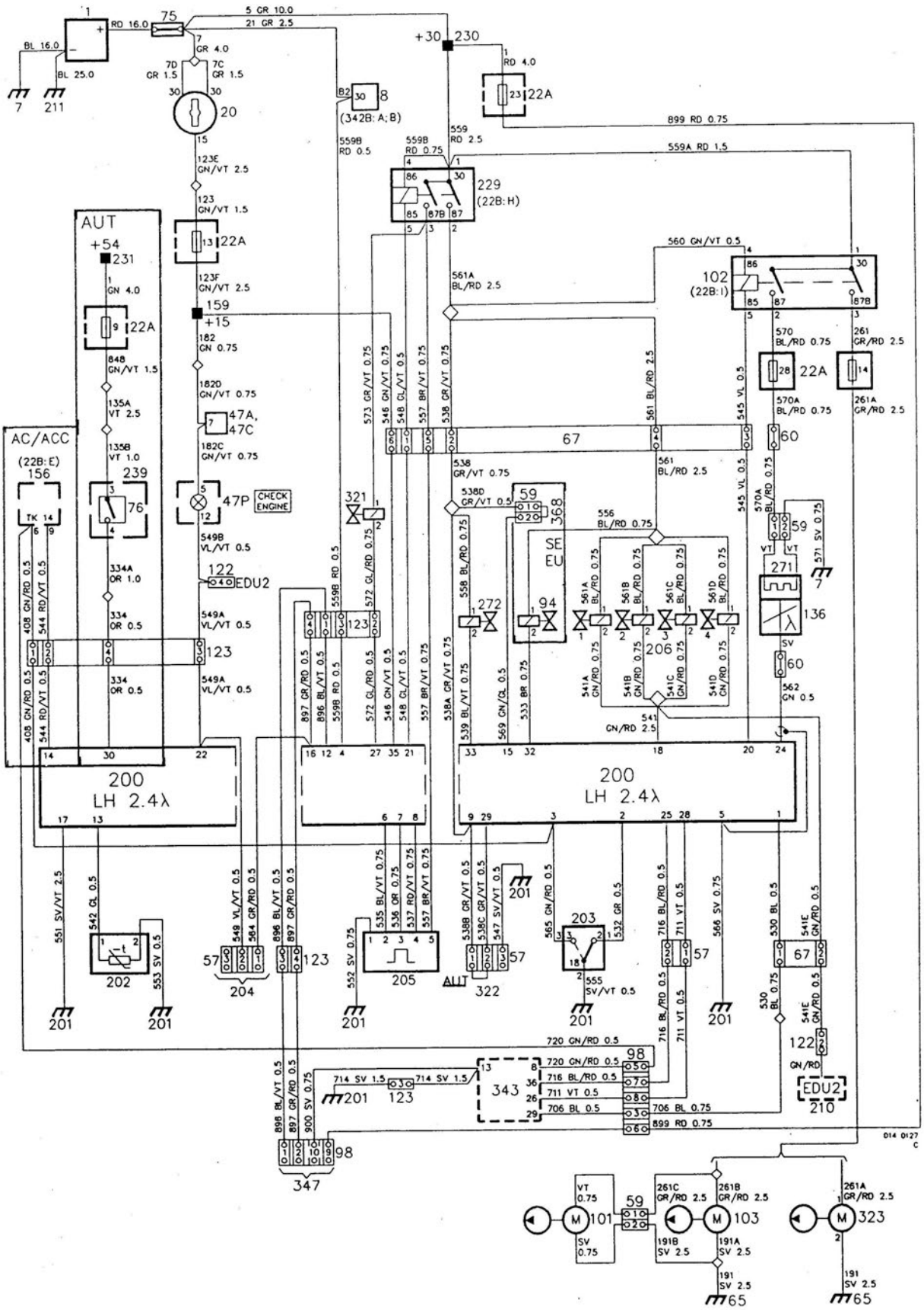

1989 9000 Turbo with cat. (US, CA) LH 2.4

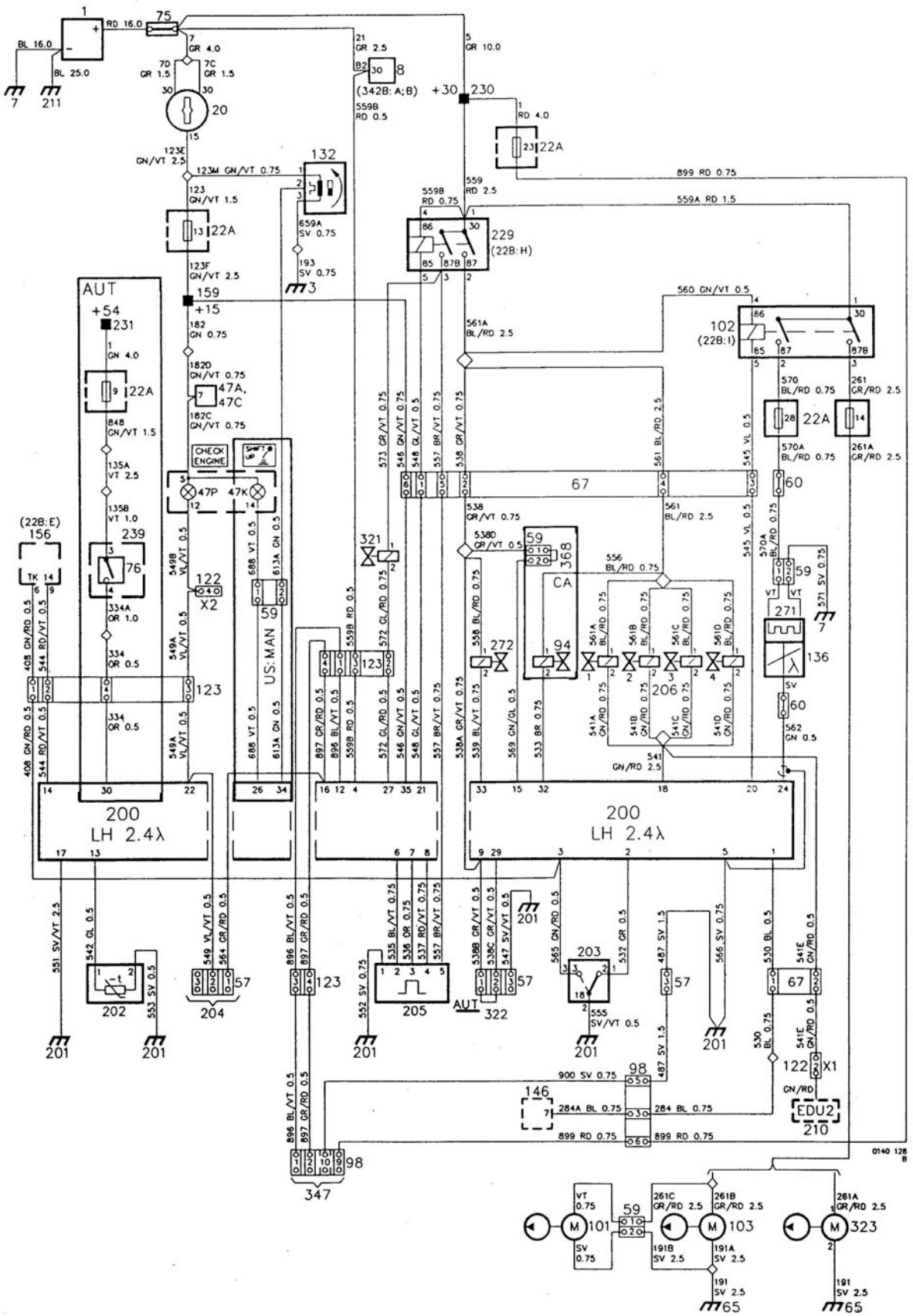

1989 9000 Turbo without cat. LH 2.2

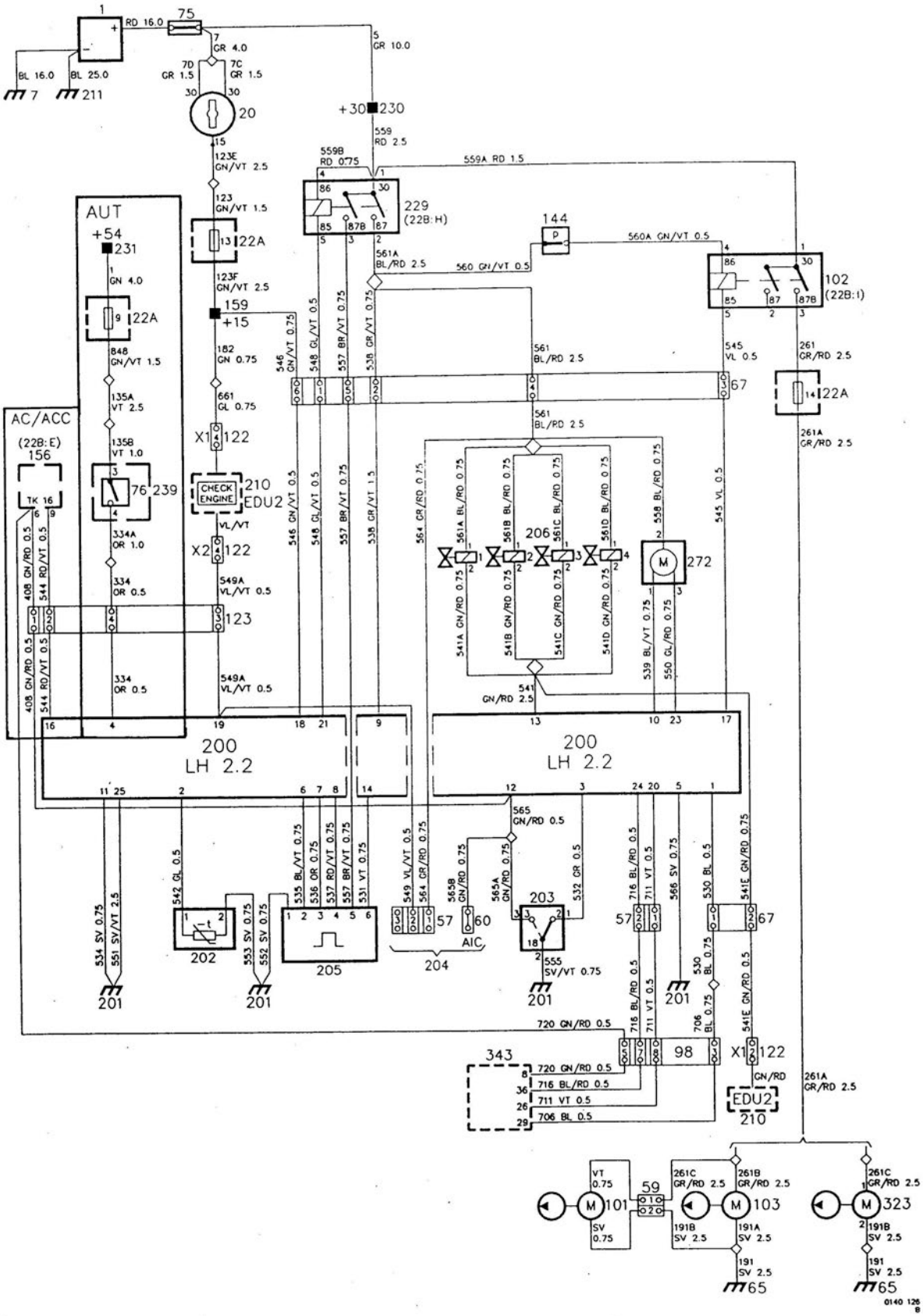

1989 9000i with cat. LH 2.4

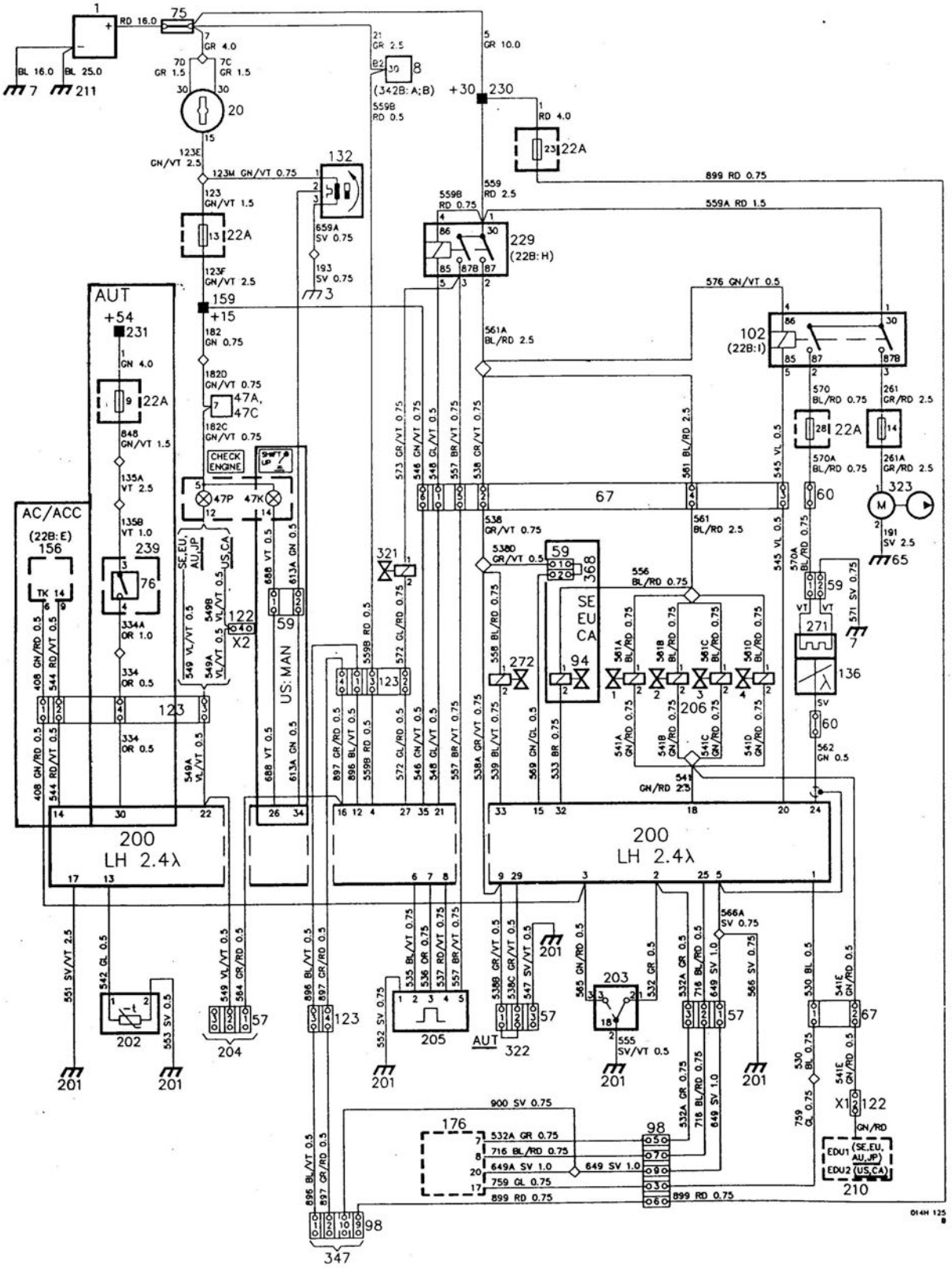

1989 9000i without cat. LH 2.2

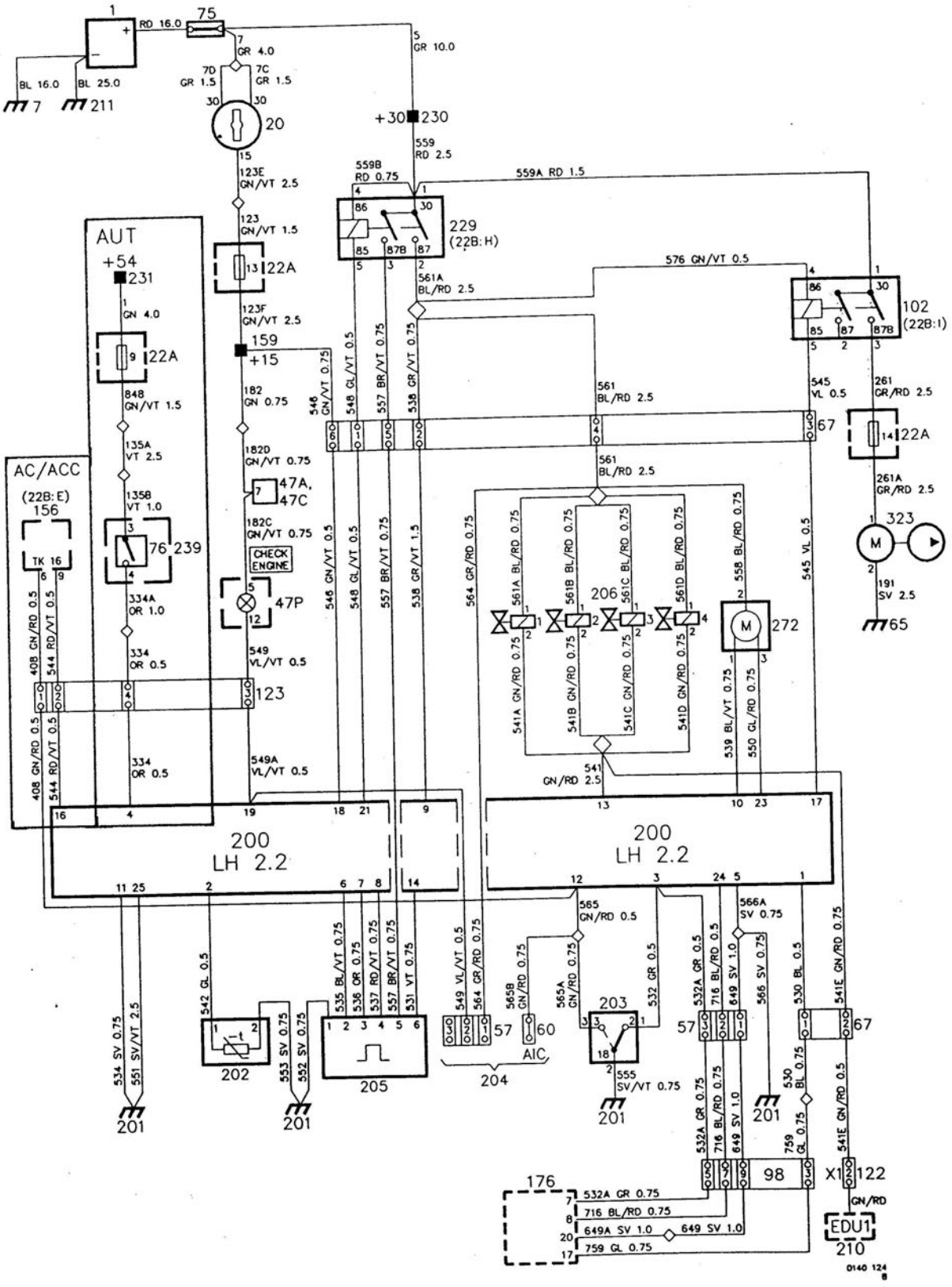

1990 9000 Turbo with cat. (SE, EU, AU, JP, US, CA) LH 2.4

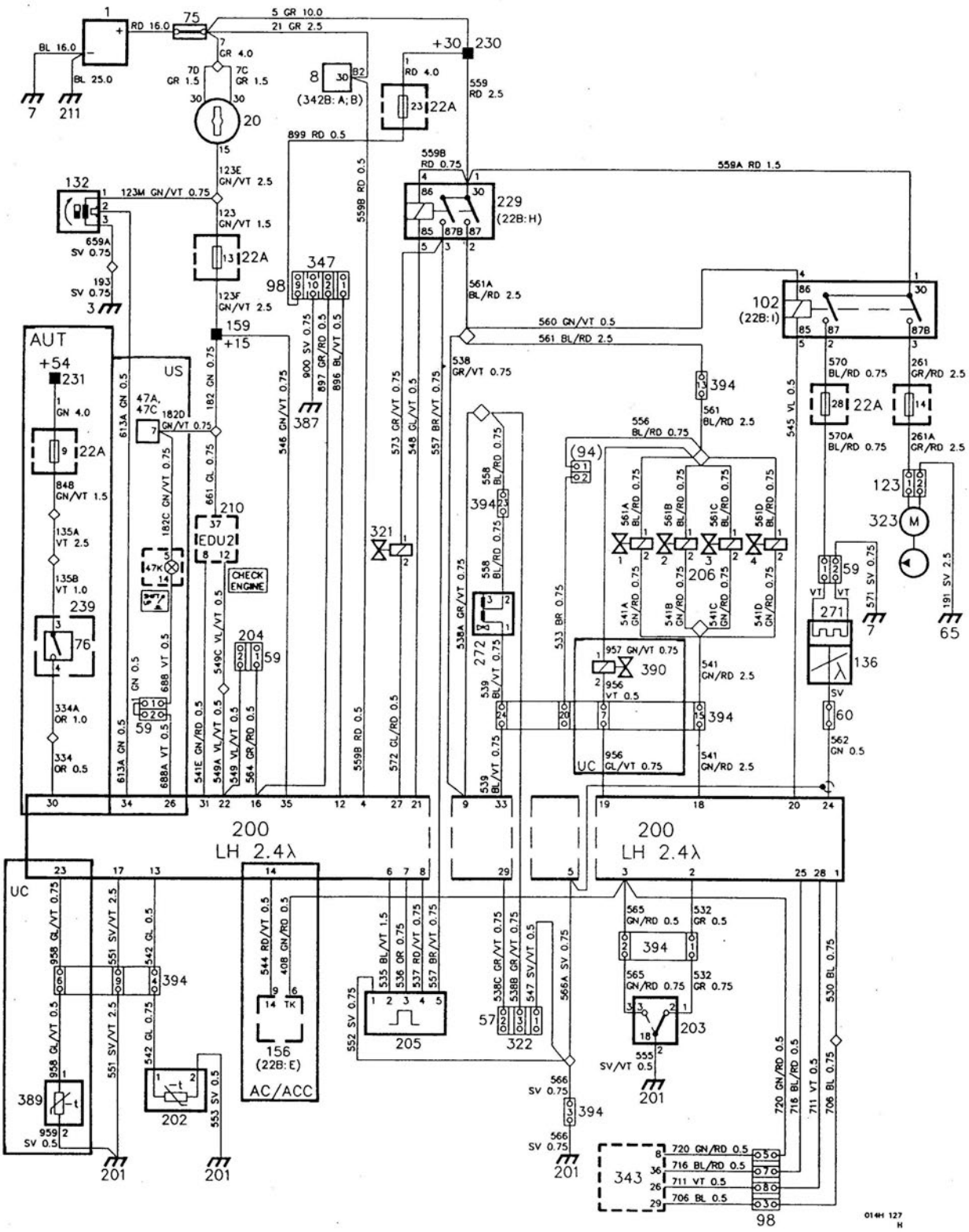

1990 9000 Turbo without cat. LH 2.2

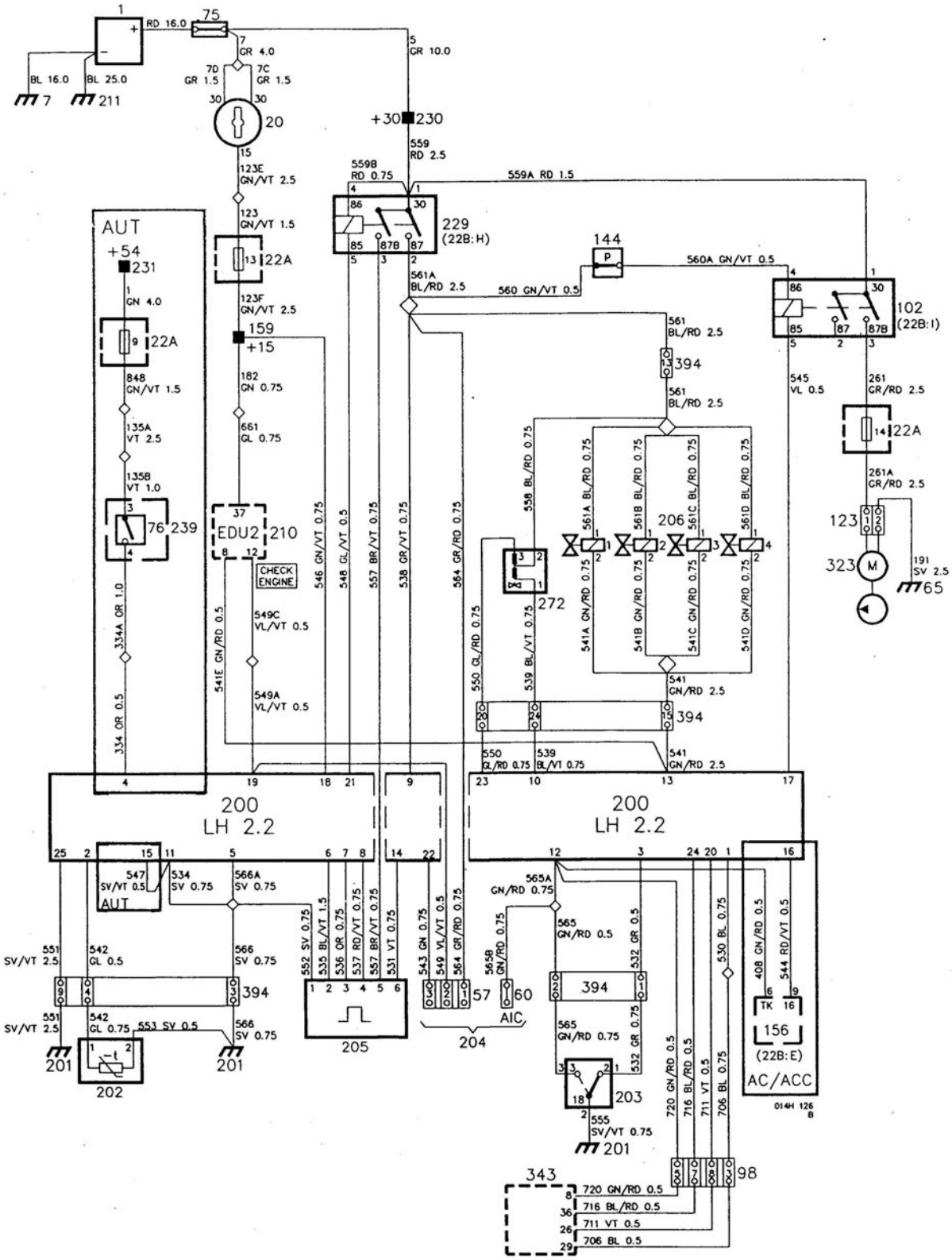

1990 9000i with cat. LH 2.4/9000 2.3i with cat. LH 2.4.1

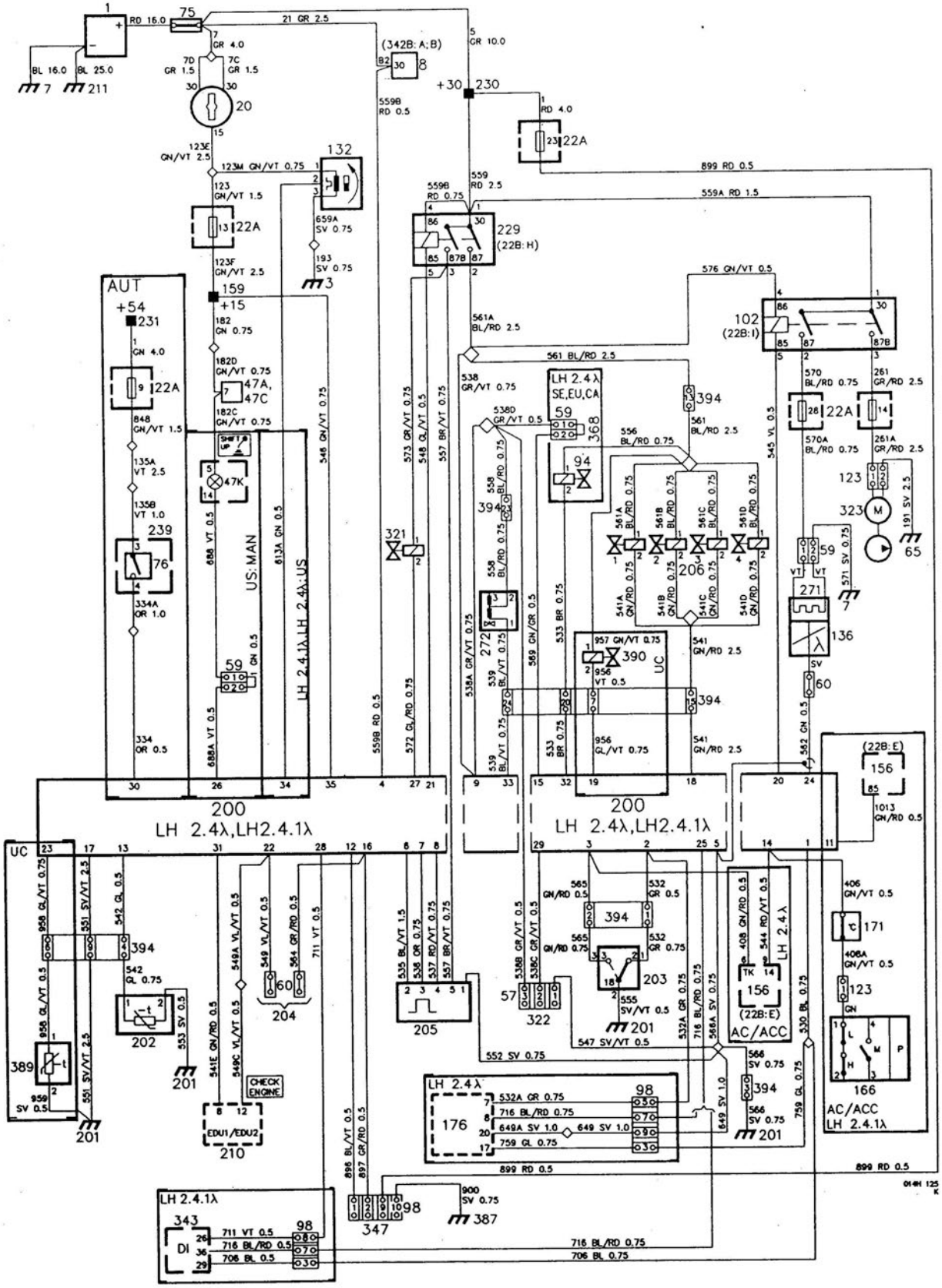

1990 9000i without cat. LH 2.2

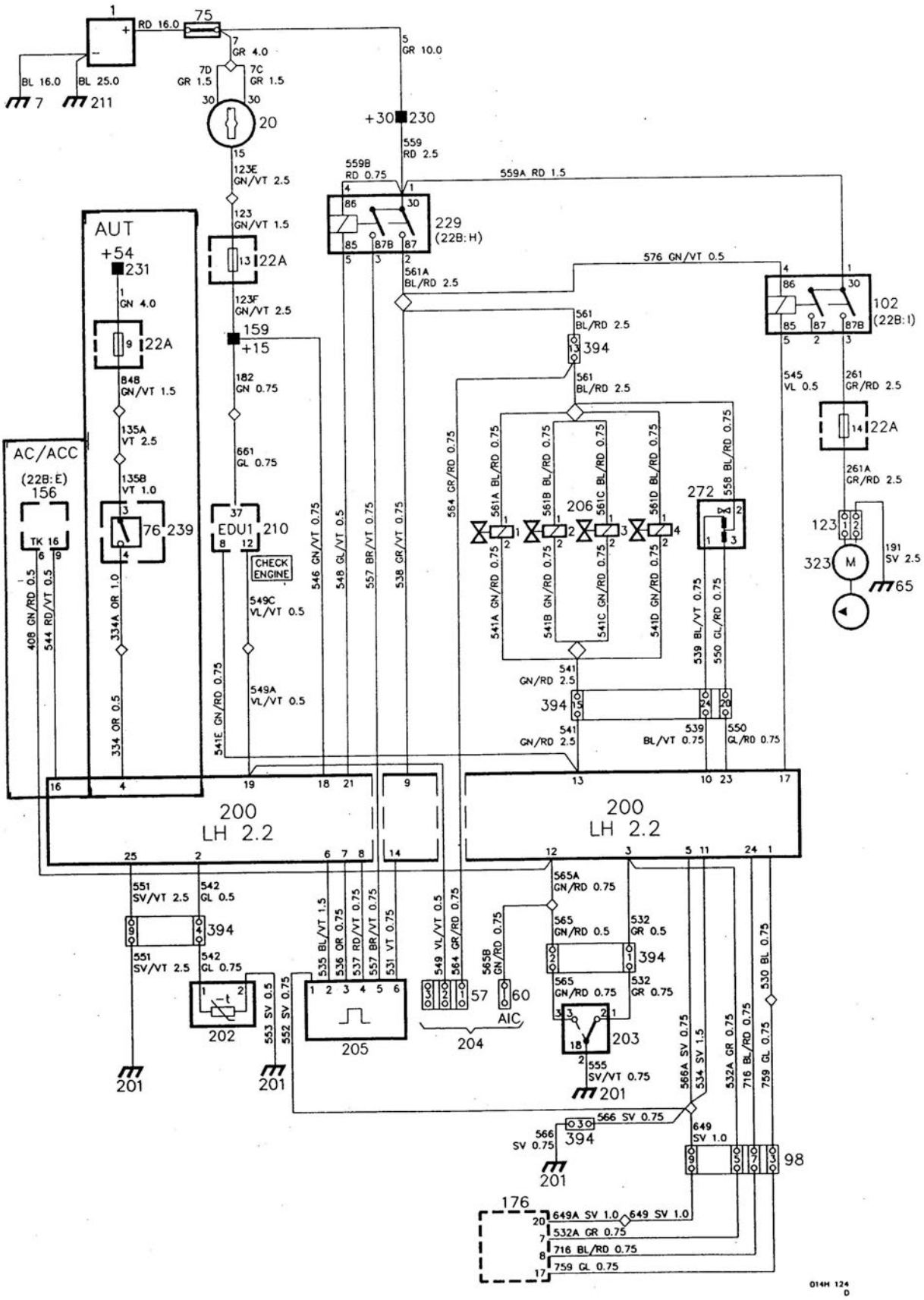

1991 9000 Turbo with cat. DI/APC LH 2.4

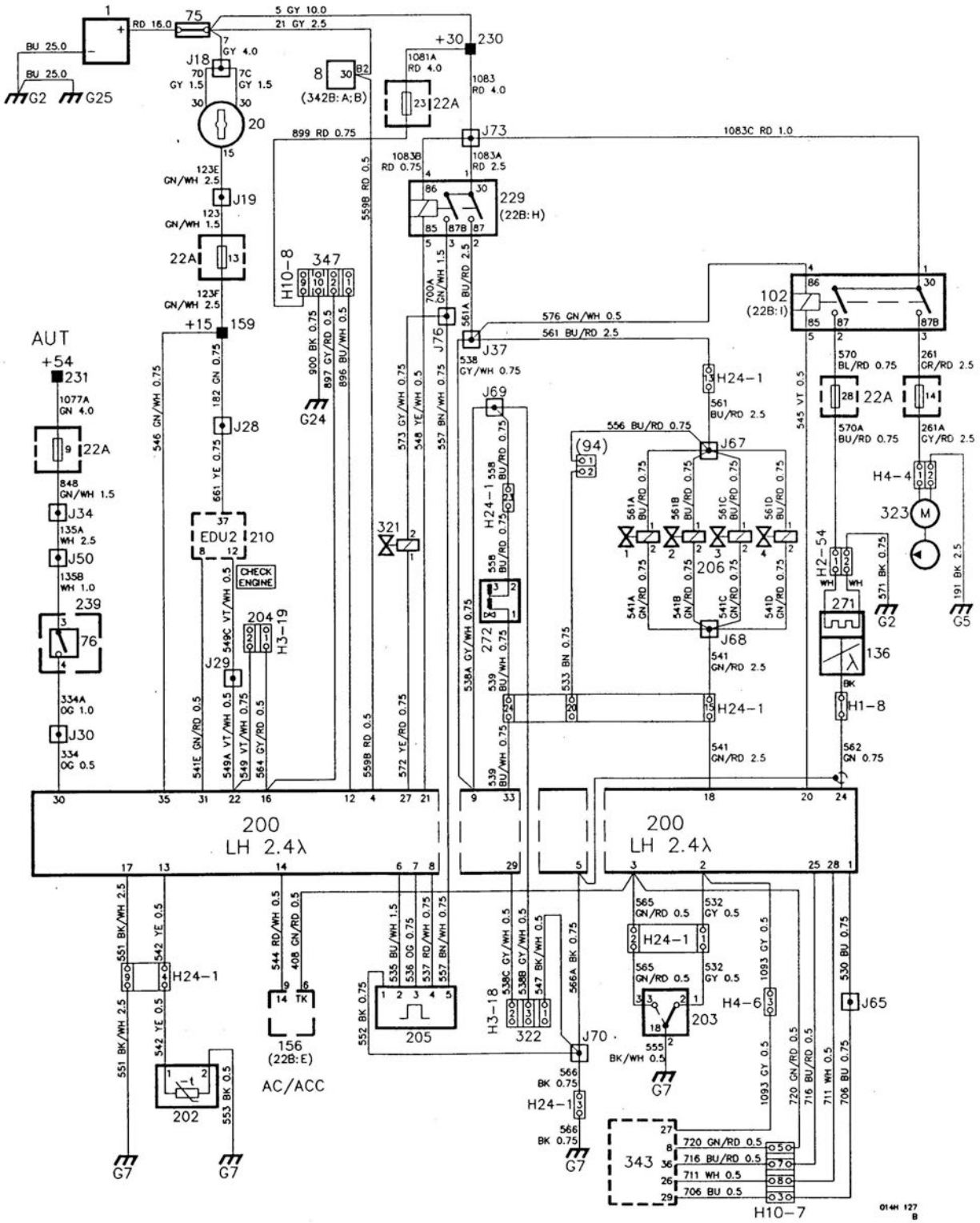

1991 9000 Turbo and 9000i DI/APC, DI LH 2.4.2

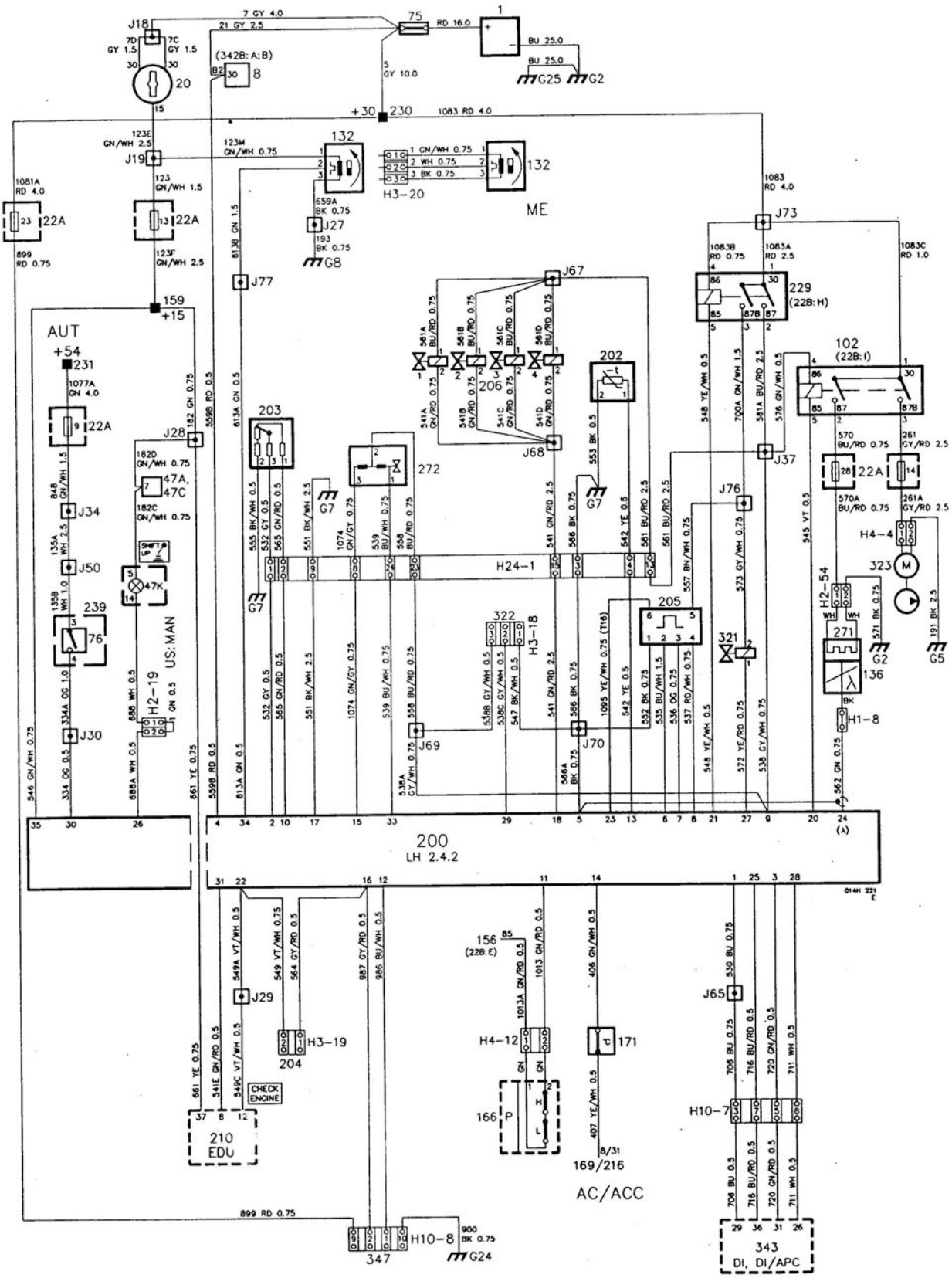

1991 9000 Turbo ETS LH 2.4 and 2.4.2

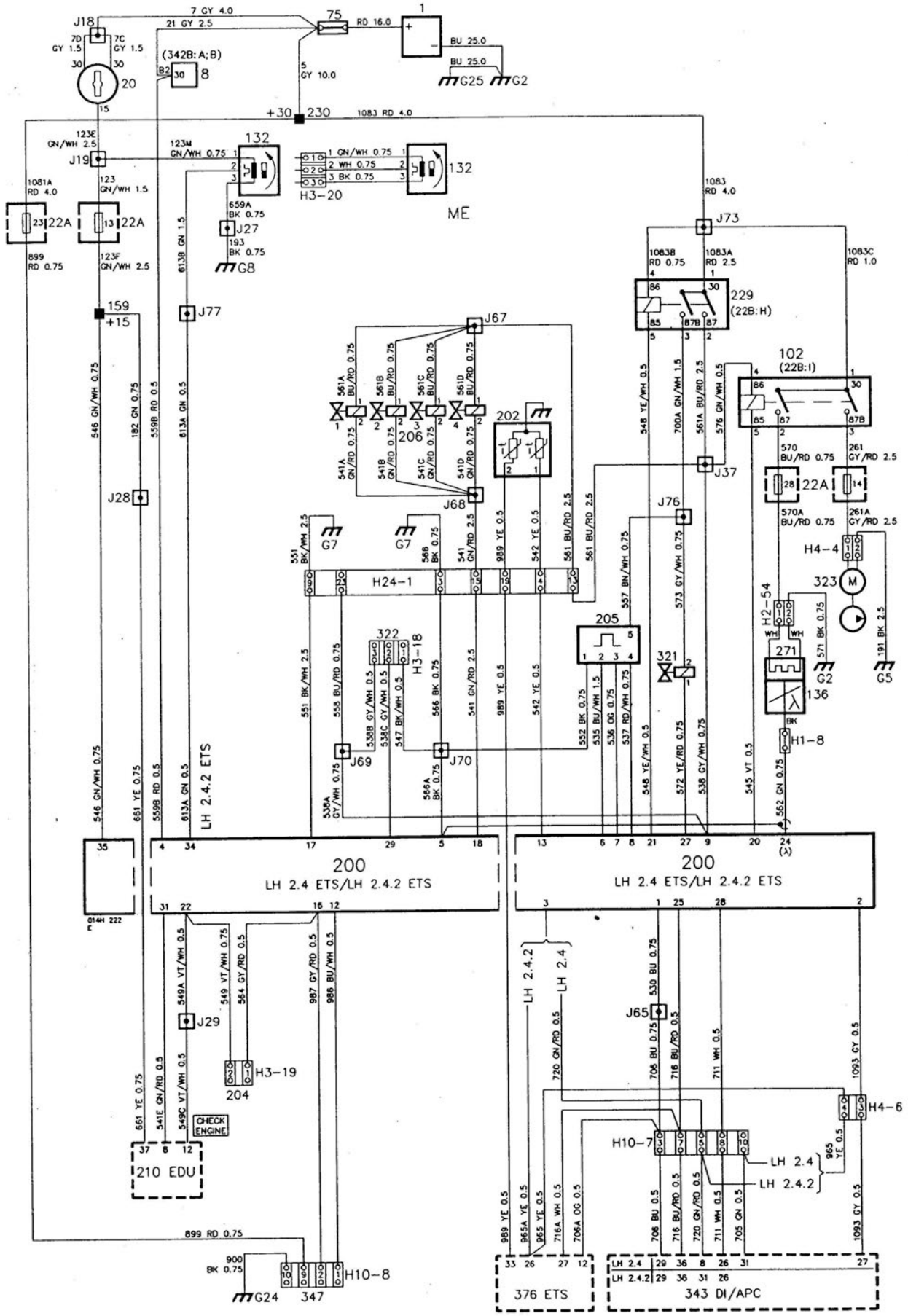

1991 9000i with cat. EZK LH 2.4

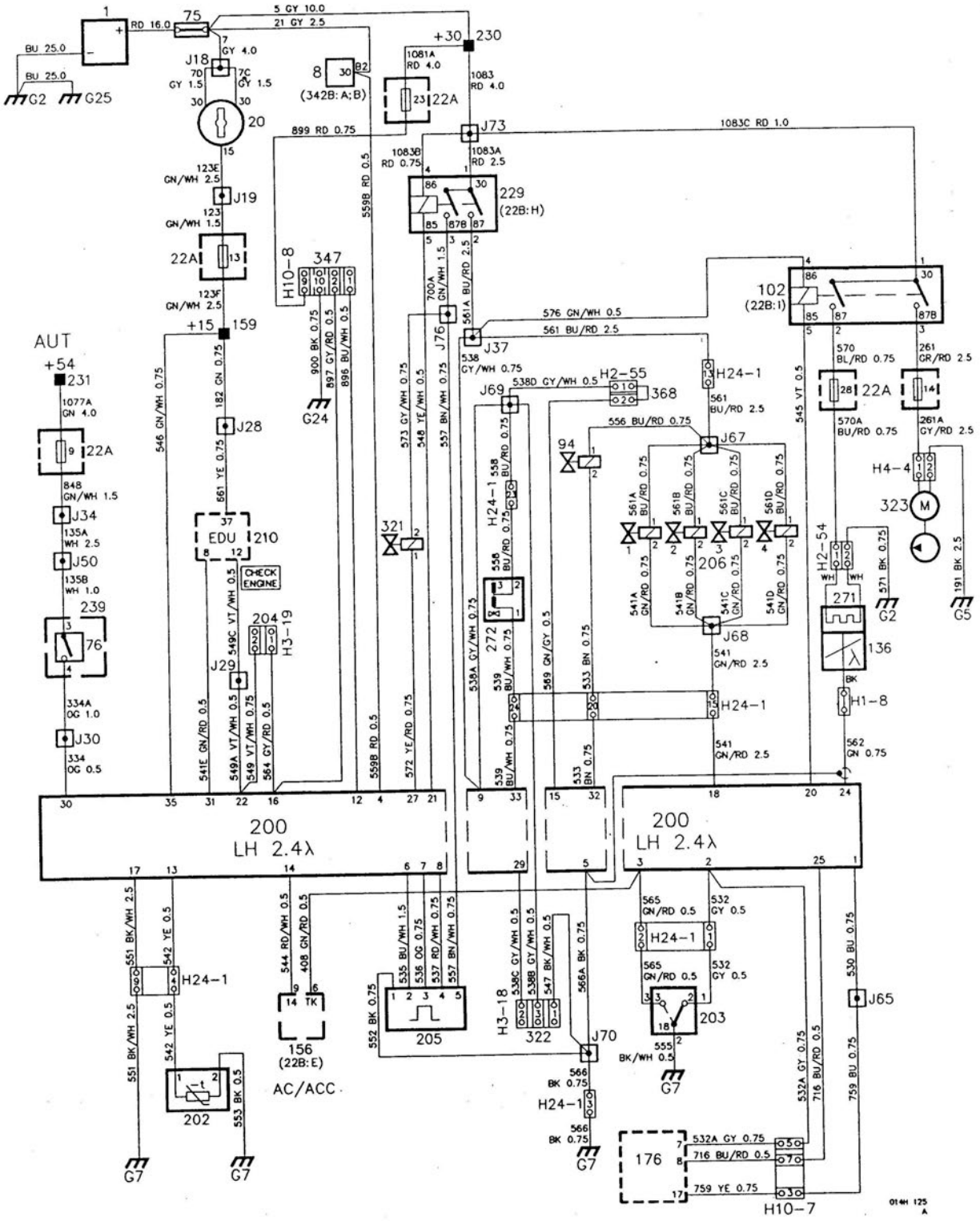

1991 9000i without cat. EZK LH 2.4.2

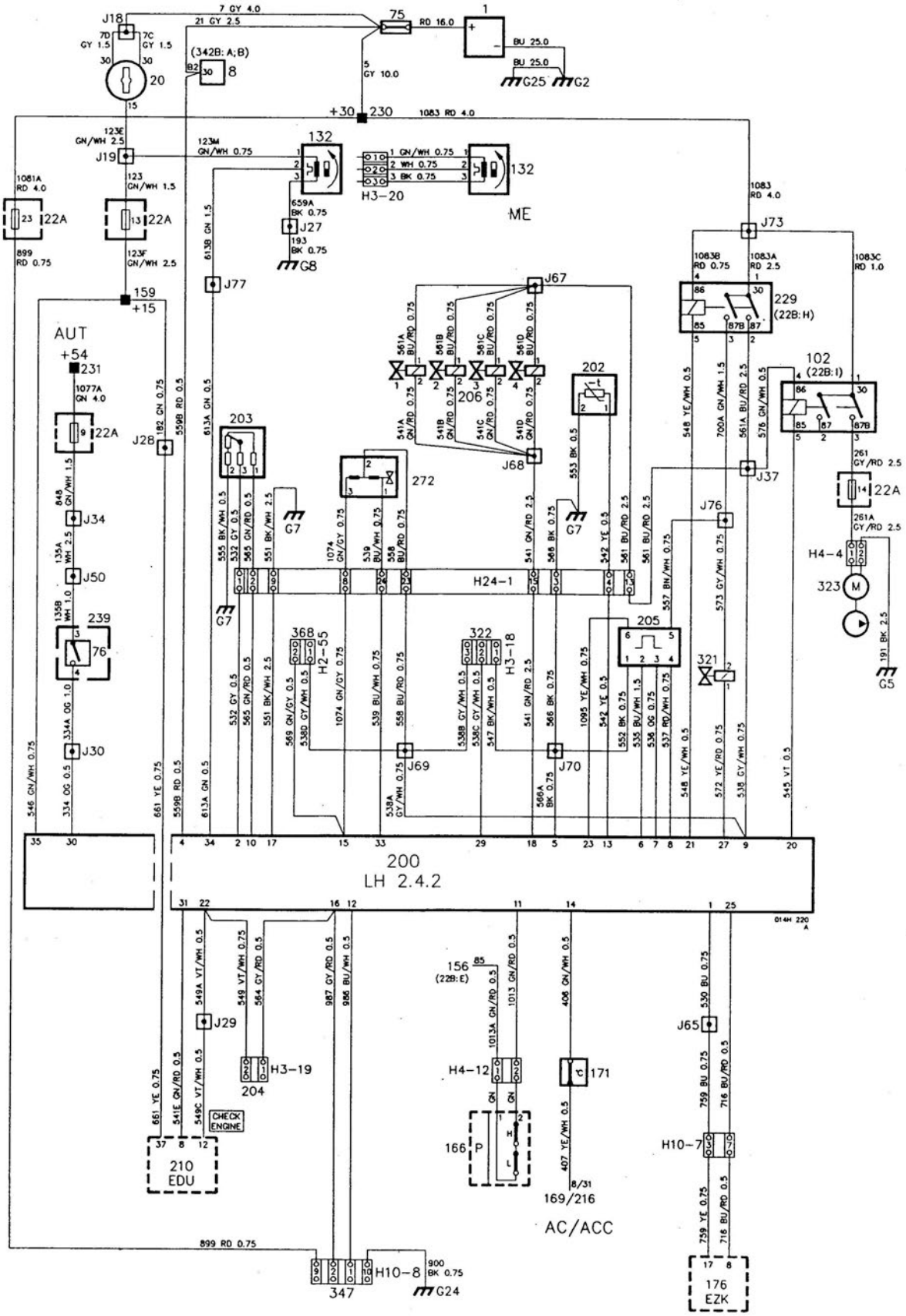

1992 9000 Turbo with cat. DI/APC LH 2.4

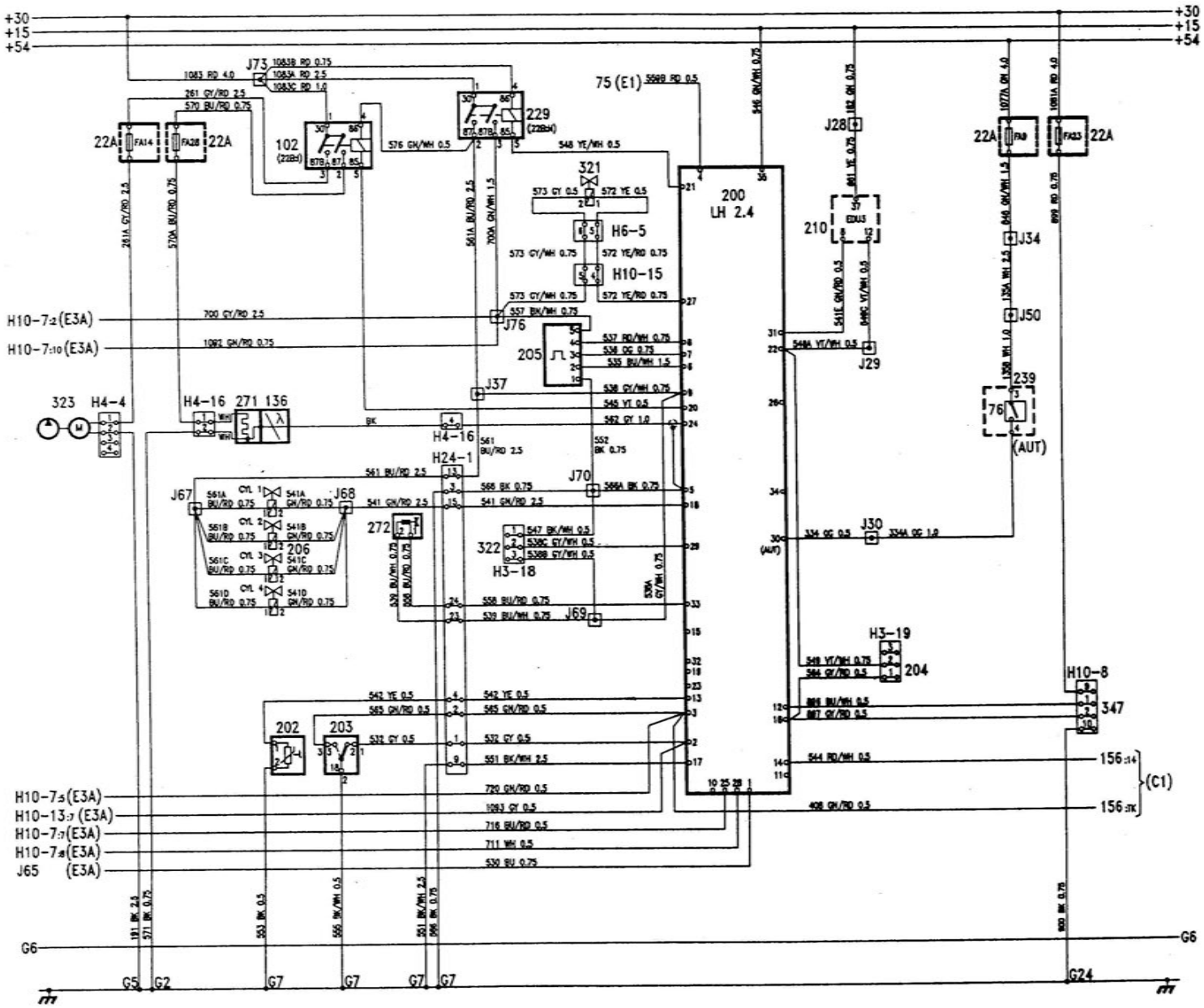

1992 9000 Turbo with cat. DI/APC ETS LH 2.4

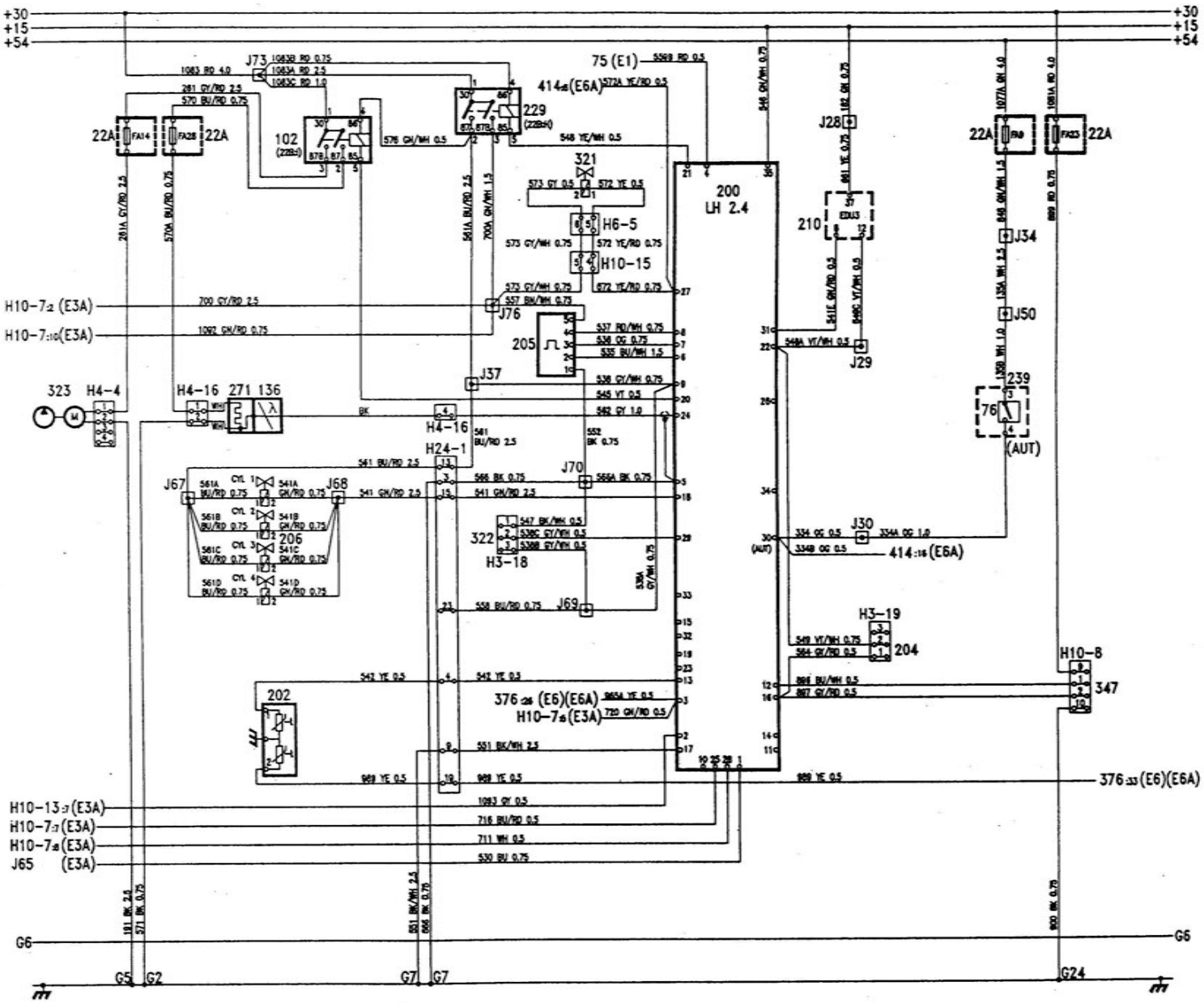

1992 9000 Turbo with cat. DI/APC ETS LH 2.4.2

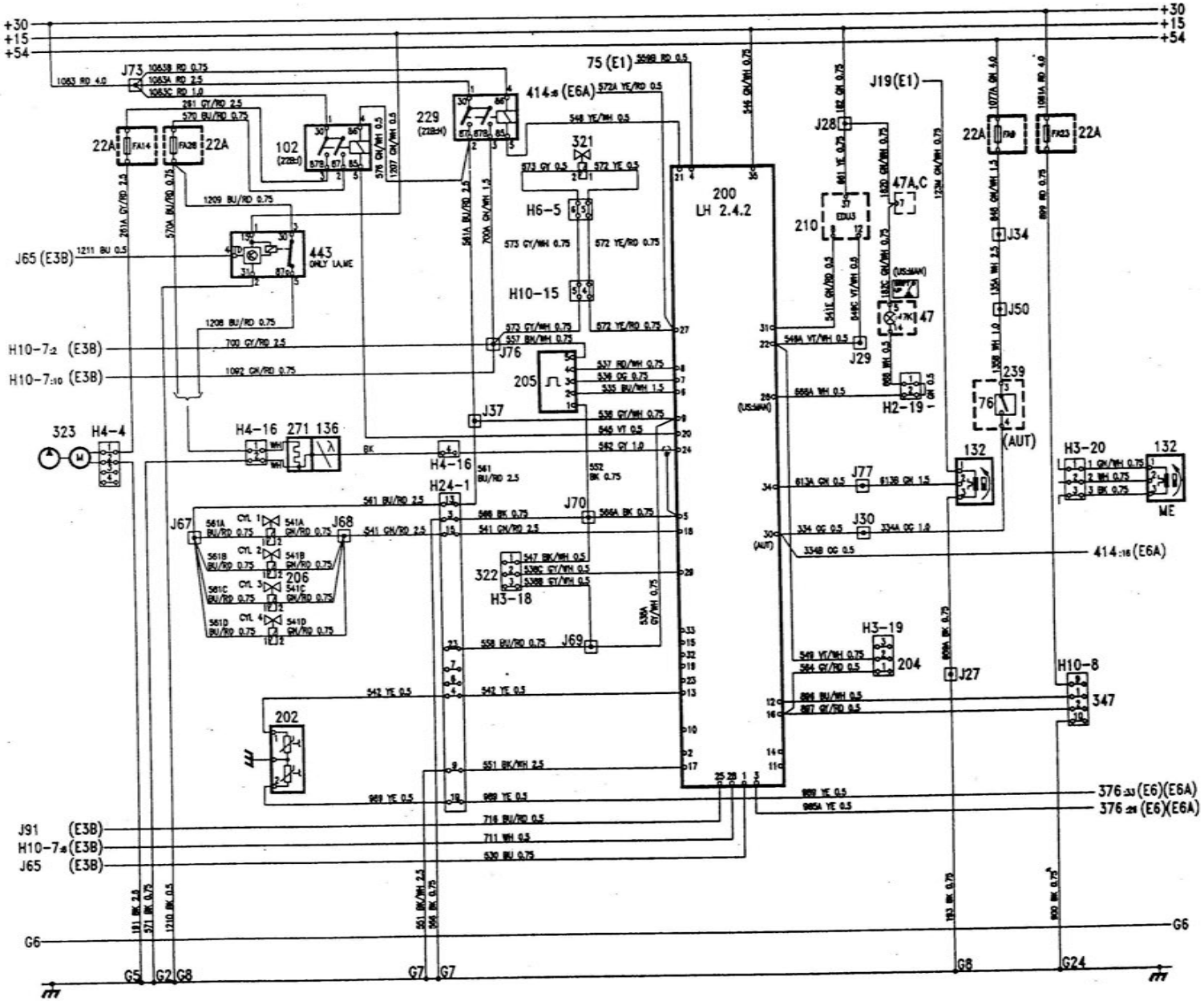

1992 9000 Turbo and 9000i DI/APC, DI LH 2.4.2

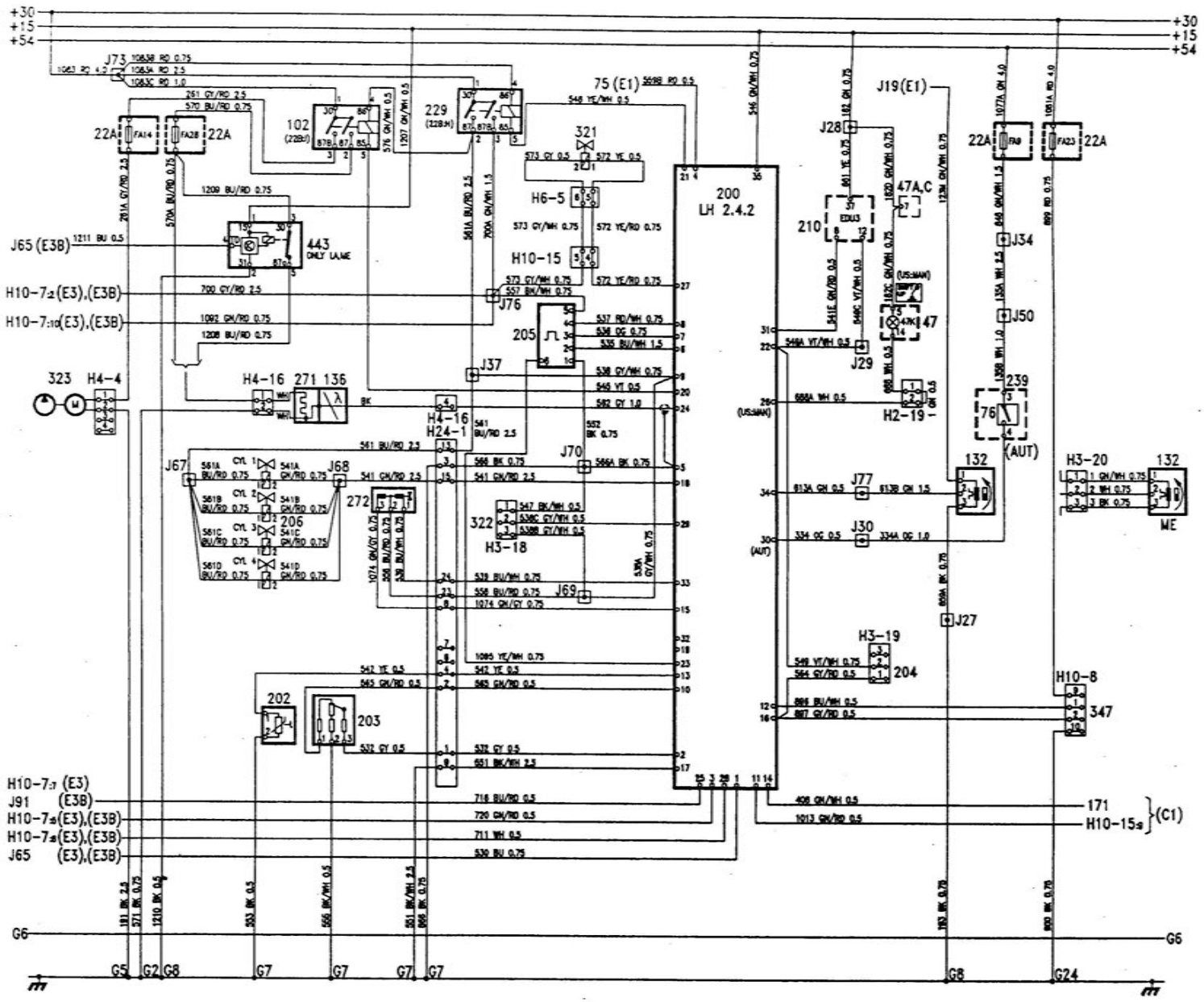

1992 9000i with cat. EZK LH 2.4

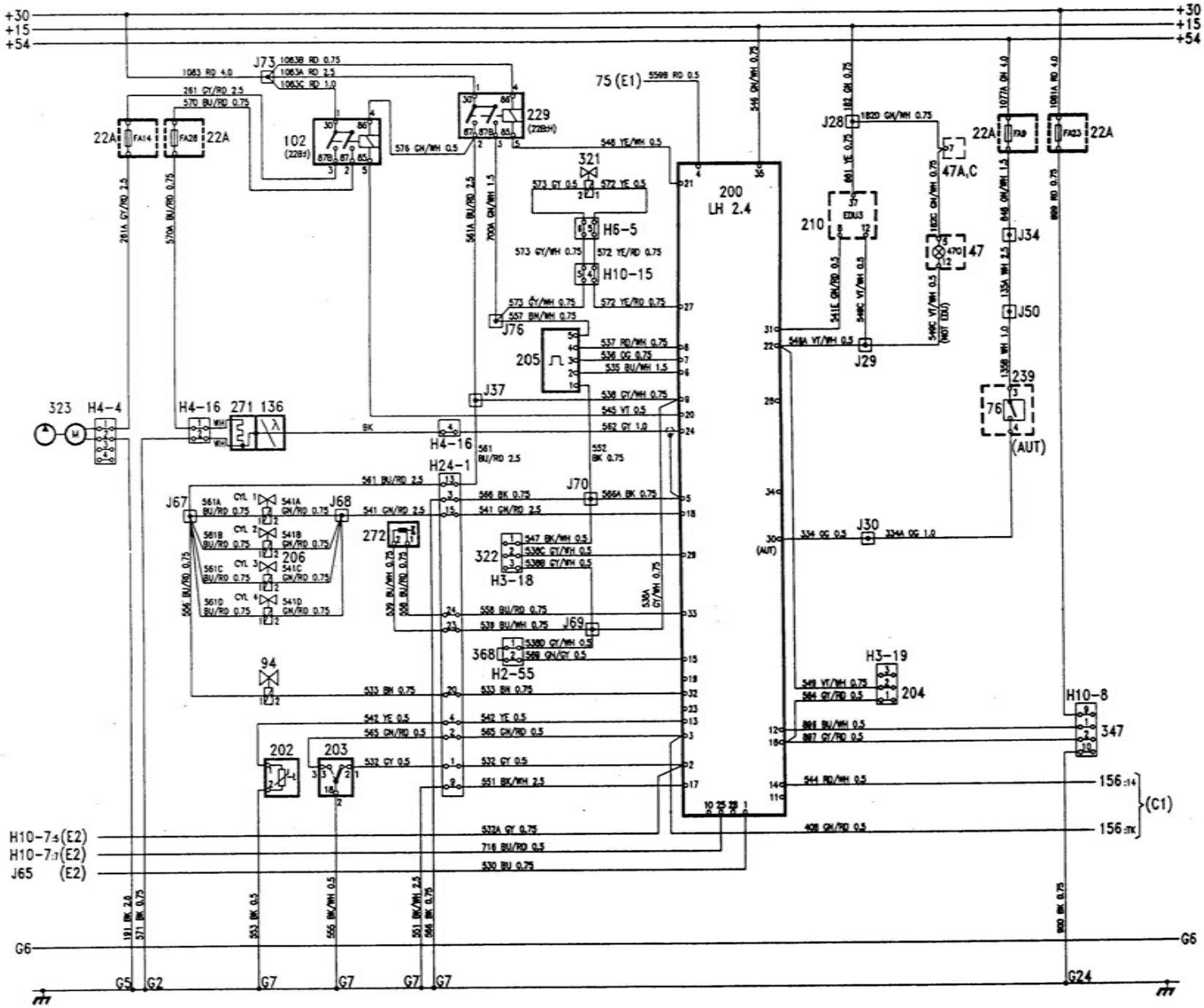

1992 9000i without cat. EZK LH 2.4.2

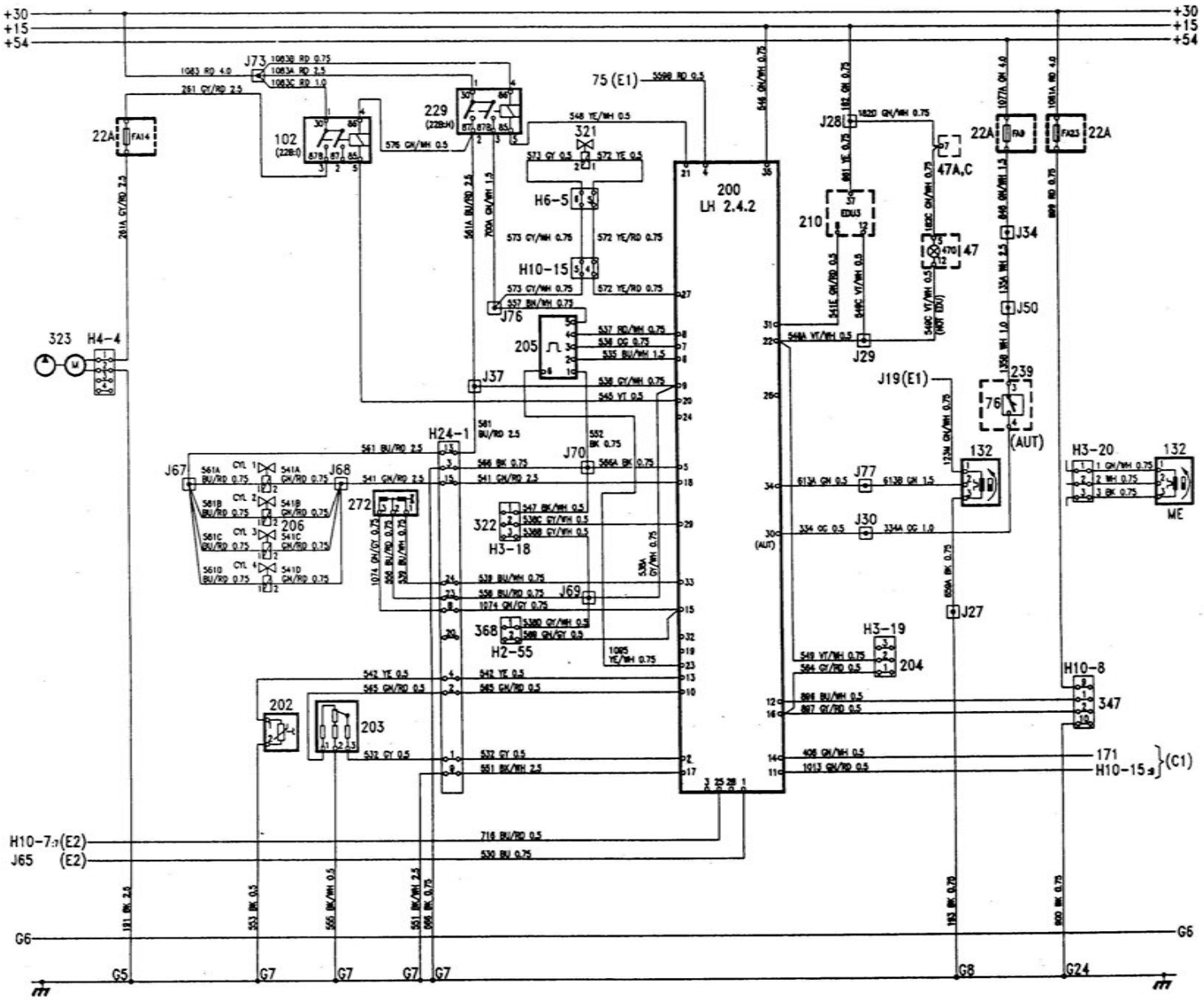

1993 9000 Turbo with cat. DI/APC LH 2.4

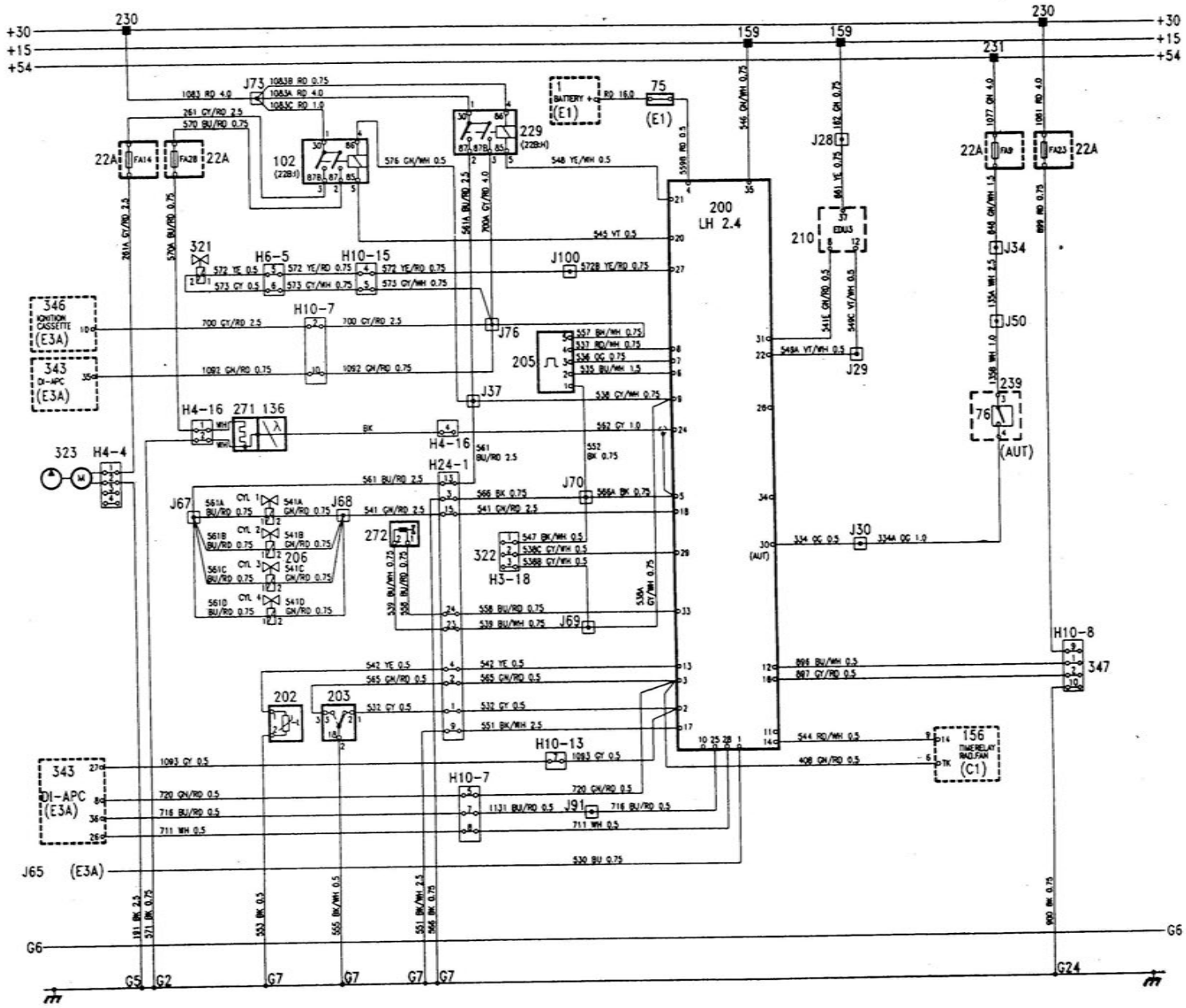

1993 9000 Turbo with cat. DI/APC ETS LH 2.4

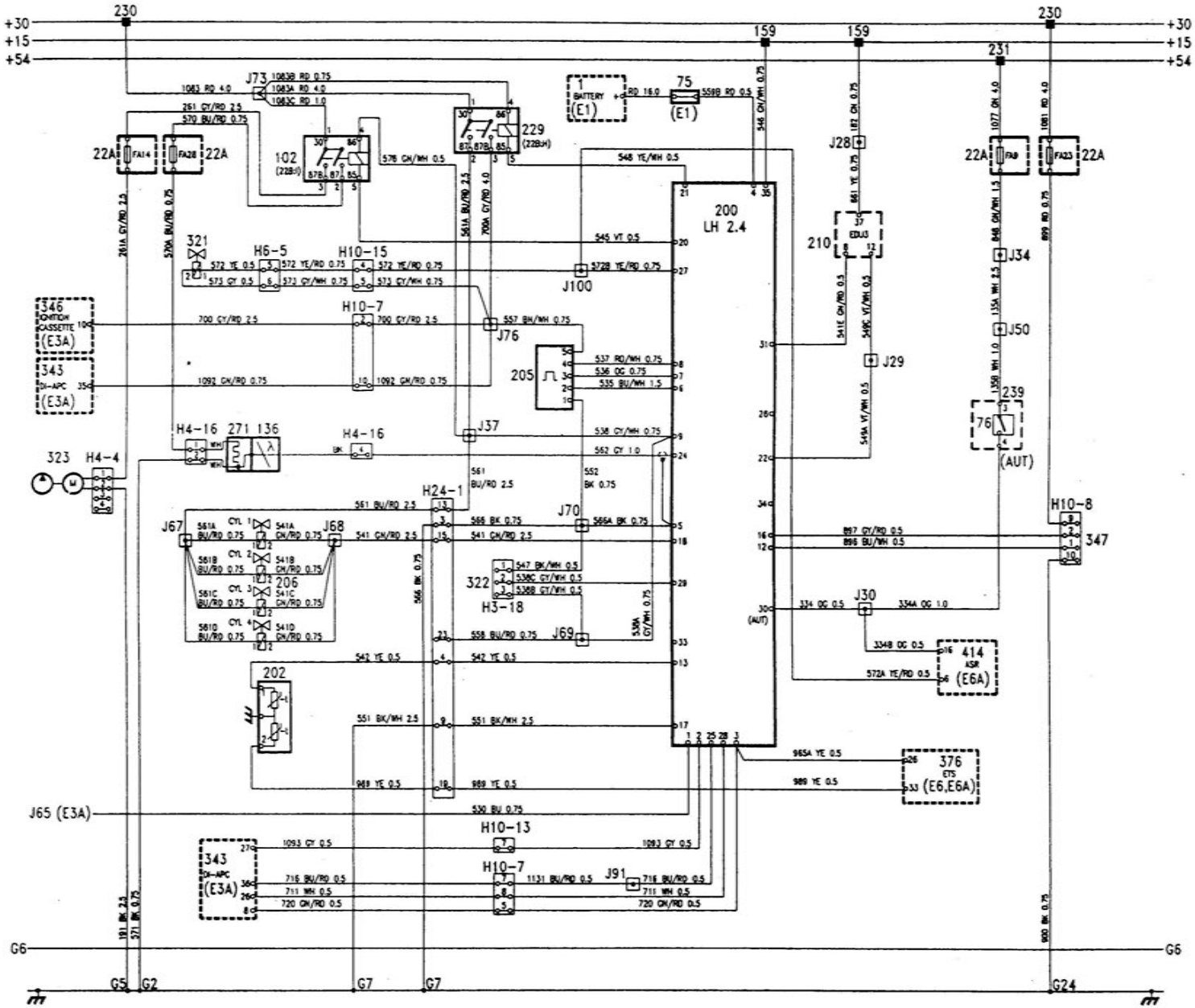

1993 9000 Turbo with cat. DI/APC ETS LH 2.4.2

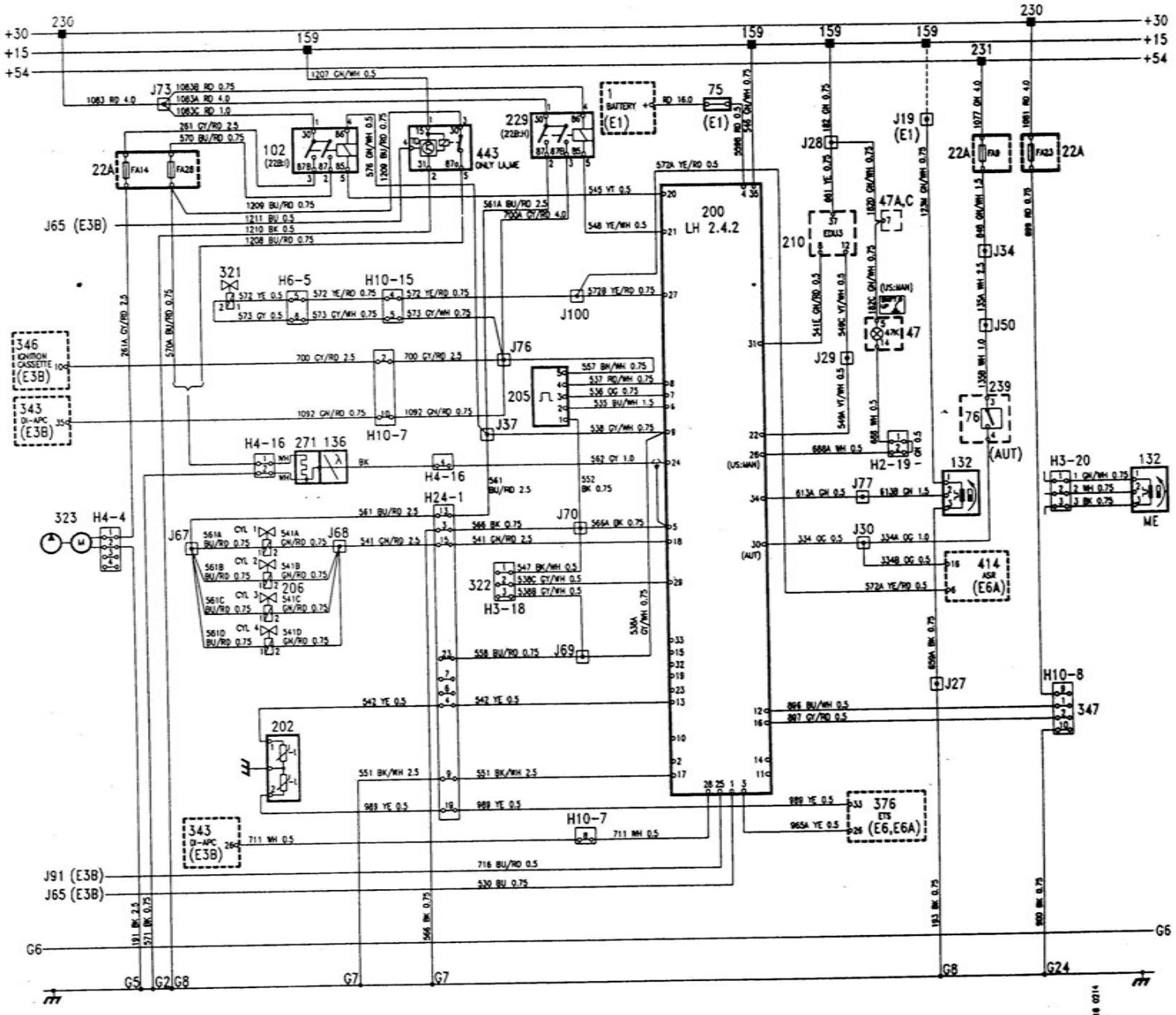

1993 9000 Turbo and 9000i DI/APC, DI LH 2.4.2

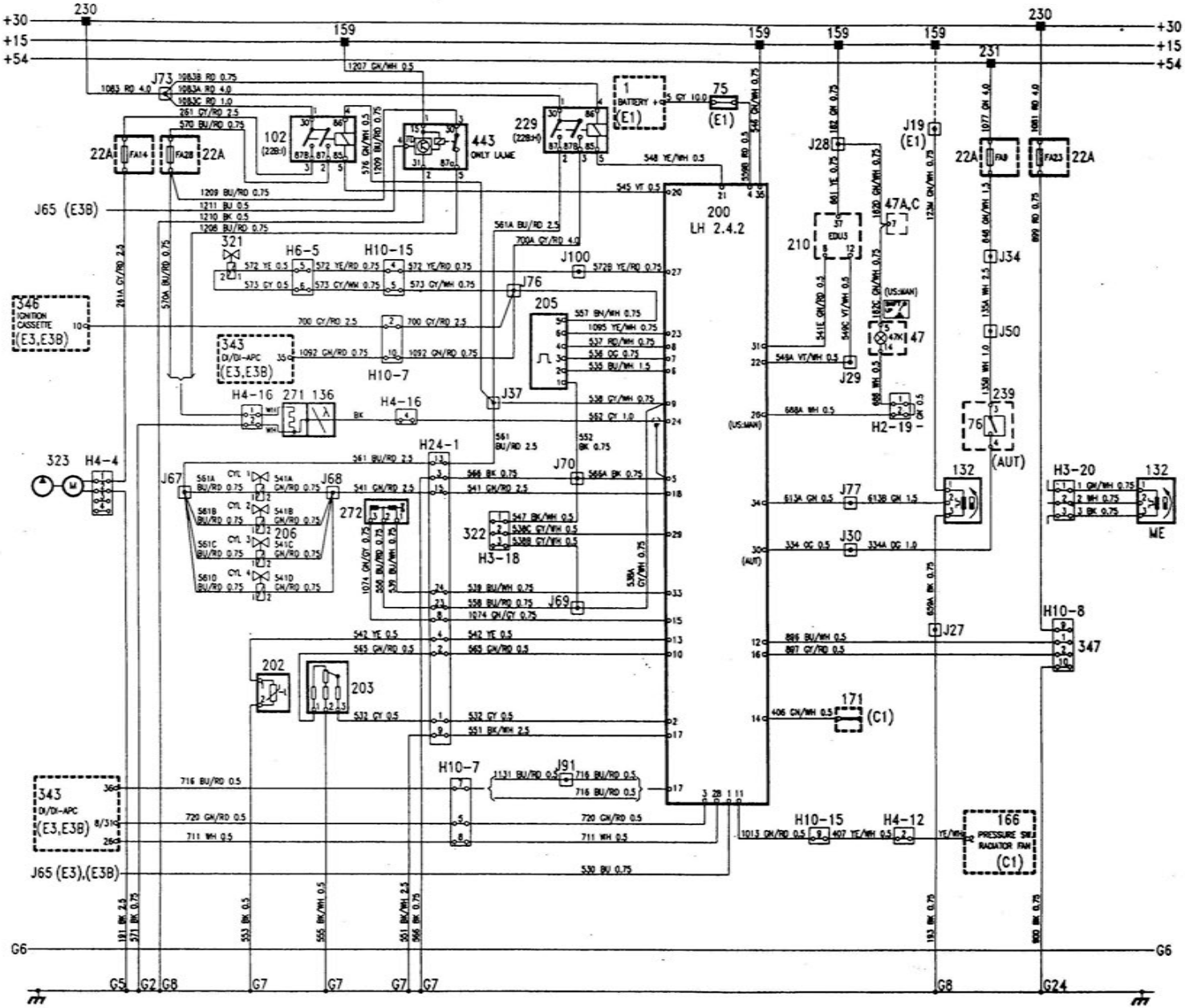

1993 9000i with cat. EZK LH 2.4

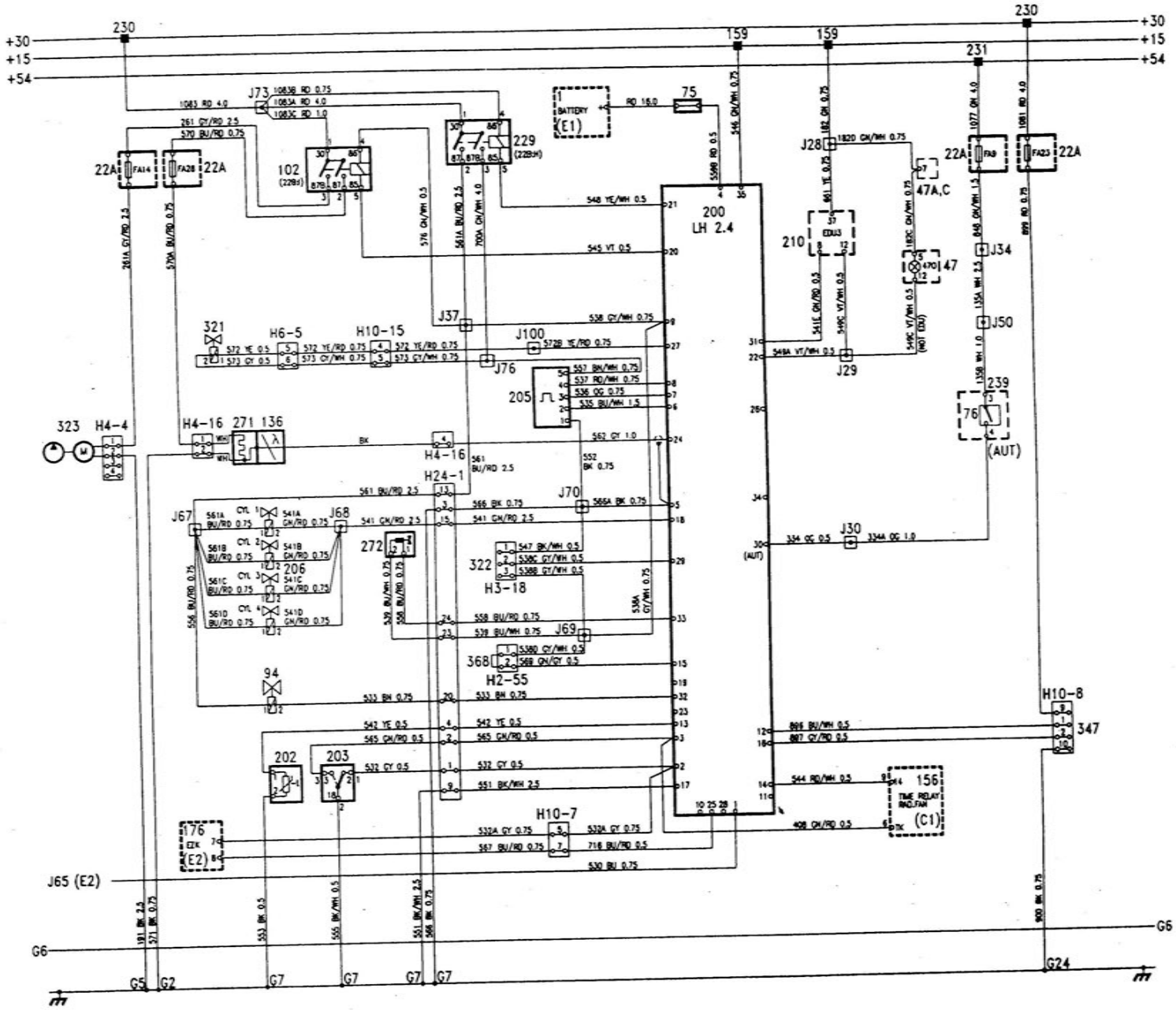

1993 9000i without cat. EZK LH 2.4.2

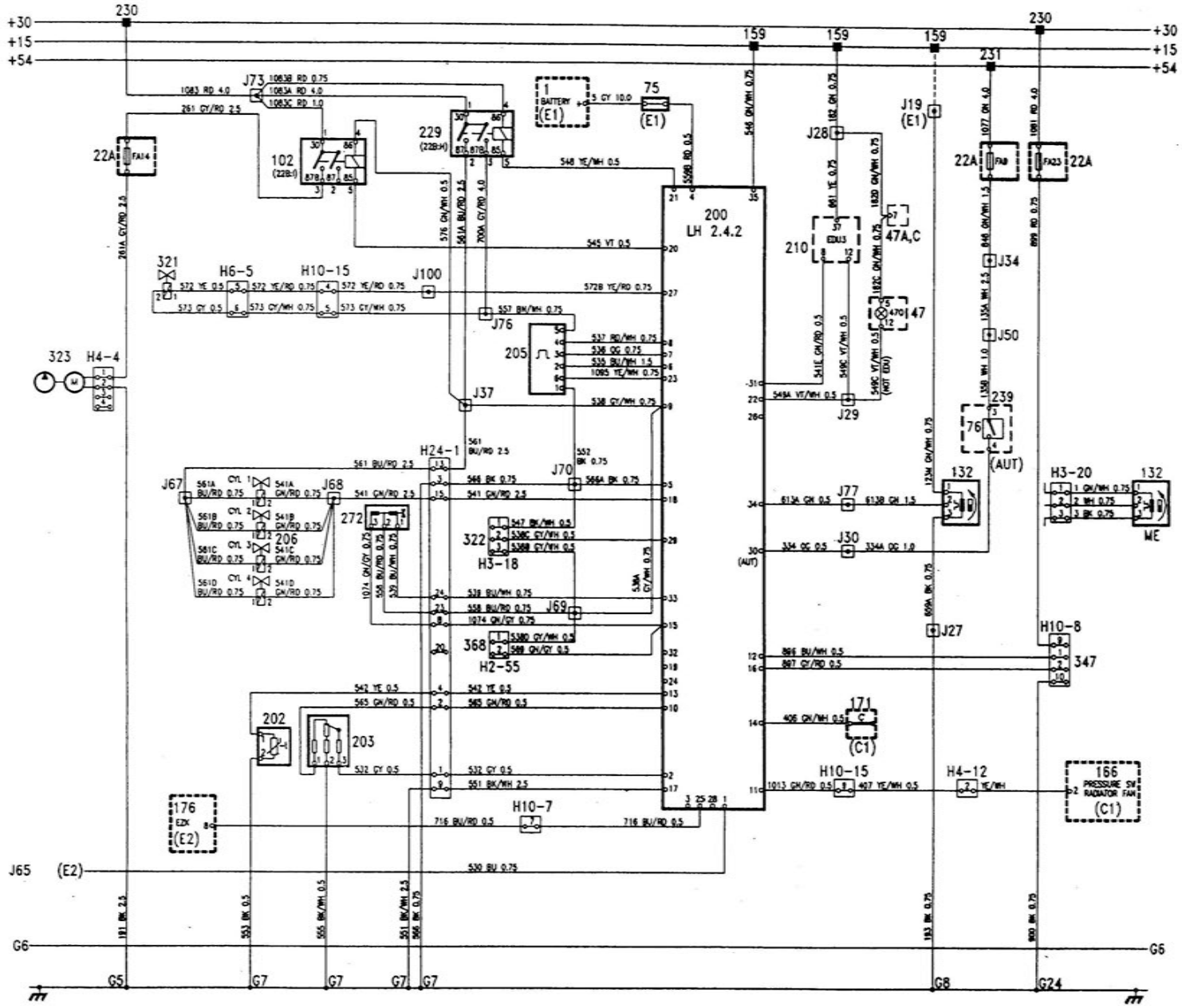

List of components

1	Battery, in engine bay
3	Grounding point, dashboard, adjacent to left-hand front loudspeaker connector (-1990)
5	Ignition coil, on radiator
7	Grounding point, battery tray, on left-hand wheel housing (-M1990)
8	Lights relay, in main fuse box in engine bay
20	Ignition switch, on right-hand side of steering column
22A	Fuse holder, behind cover panel in glove box
22B	Relay holder, behind cover panel in glove box
	In main instrument display panel:
47A	Fuel gauge
47C	Coolant temperature gauge
47K	SHIFT UP indicator lamp
47O	CHECK ENGINE warning lamp (MIL) (M1990-)
47P	CHECK ENGINE warning lamp (MIL) (-M1989)
57	3-pin connector, in engine bay adjacent to windscreen wiper motor
59	2-pin connectors, adjacent to fuel pumps under luggage compartment floor/ under dashboard to left of steering column/ in engine bay to right of intake manifold/ in engine bay adjacent to windscreen wiper motor
60	Single-pole connectors, in engine bay on left-hand side of bulkhead/ adjacent to engine exhaust manifold beside oxygen sensor/ in engine bay adjacent to windscreen wiper motor
65	Grounding point, rear seat, under left-hand part of seat (-M1990)
67	6-pin connector, in engine bay adjacent to windscreen wiper motor
75	Distribution block, battery positive supply, on battery tray
76	Engine idling speed increase switch, automatic transmission, under centre console adjacent to selector lever, in selector lever position switch 239
94	Cold-starting valve, in engine bay on intake manifold
95	Auxiliary air valve, on intake manifold
98	10-pin connector, under right-hand front seat
101	Feed pump in fuel tank, under luggage compartment floor (-M1989)
102	Fuel pump relay, in main fuse box behind the glove box
103	Fuel pump, in fuel tank under luggage compartment floor (-M1989)
122	8-pin connector, behind main instrument display panel (-M1989)
123	4-pin connectors, in engine bay adjacent to windscreen wiper motor (-M1989)/ adjacent to fuel pump under luggage compartment floor (M1990)/ under right-hand front seat/ in engine bay adjacent to battery/ adjacent to pressure switch for radiator fan on right below the windscreen
132	Speed sensor, in speedometer in main instrument display panel
136	Oxygen sensor, on exhaust pipe under steering gear/ to right of turbocharger
144	Pressure switch, under dashboard to left of steering column (behind knee shield)
146	Ignition power module, electronic ignition system, on left-hand wheel housing adjacent to battery
147	Ignition pulse amplifier, in main fuse box behind the glove box
156	Relay, A/C and ACC cooling fan, in main fuse box behind the glove box
159	Distribution terminal, +15, in main fuse box behind the glove box
166	Pressure switch for radiator fan, on receiver in front of right-hand wheel housing (M1991-)/ on accumulator/receiver-drier unit on right below windscreen (-M1990)
169	Switch, A/C, on dashboard
171	Antifrost thermostat, on evaporator casing on right-hand side below the windscreen
176	Control module, EZK, under dashboard to left of steering column (behind knee shield) (-M1987)/ under left-hand front seat (M1988-91)/ in engine bay adjacent to LH control module (M1991-)
200	LH control module, in engine bay on left-hand side behind bulkhead partition.
201	Grounding point, at rear of engine on sheet metal bracket under intake manifold (-M1989)/ adjacent to engine lifting eye (-M1990)

202	Coolant temperature sensor, on intake manifold flange between cylinders 1 and 2 (M1992-)/ cylinders 2 and 3 (-M1991)
203	Throttle position sensor, on throttle body
204 (H3-19)	Data link connector on bulkhead adjacent to windscreen wiper motor (M1985-86)/ in engine bay on left-hand side adjacent to modification identity plate (M1987-)
205	Mass air flow sensor, adjacent to filter element
206	Injectors, 2.0 l: on bottom of intake manifold 2.3 l: on top of intake manifold
210	Trip computer EDU, in main instrument display panel
211	Grounding point, gearbox (-M1990)
216	Control module, ACC, in dashboard
229	Main relay, fuel system, in main fuse box behind glove box
230	Distribution terminal, +30, in main fuse box behind the glove box
231	Distribution terminal, +54, in main fuse box behind the glove box
239	Selector lever position switch, automatic transmission, under the centre console adjacent to the selector lever
257	Grounding point, generator bracket
270	Relay, shift-up indication, in main fuse box behind the glove box
271	Oxygen sensor preheating, integrated in oxygen sensor
272	Idle air control valve, on intake manifold in the middle
285	Fuse, oxygen sensor, in engine bay adjacent to windscreen wiper motor
321	EVAP canister, in right-hand wheel housing
322 (H3-18)	Connector, LH codification, on left-hand side of engine bay on bulkhead partition adjacent to the LH control module
323	Fuel pump with integrated feed pump, in fuel tank under luggage compartment floor
342B	Relay holder, in main fuse box in engine bay
343	Control module, DI/APC, adjacent to LH control module in engine bay/ under left-hand front seat (-M1991)
346	Ignition discharge module, DI/APC, on camshaft cover
347 (H10-8)	Data link connector, diagnostics test, under right-hand front seat (black)
368	Cold-starting valve codification, on left-hand side of engine bay on bulkhead partition adjacent to the LH control module
376	Electronic unit, ETS, under left-hand front seat
387	Grounding point, right-hand front seat member (-M1990)
389	Temperature sensor, adjacent to EGR valve under intake manifold
390	Modulating valve, in the engine bay on the left-hand side, on the bulkhead partition
394	24-pin connector, in the engine bay adjacent to the windscreen wiper motor (-M1990)
414	Control module, ASR, under luggage compartment floor (LH 2.4)/ under left-hand front seat (LH 2.4.2)
443	Relay, disconnection of oxygen sensor preheating, under dashboard to left of steering column on bracket for Cruise Control system control module
	Single-pole connector
H1-8	In engine bay behind bulkhead partition, on the right-hand side
	2-pin connectors
H2-19	Under dashboard, to left of steering column
H2-54	In engine bay behind bulkhead partition, on the right-hand side
	3-pin connector
H3-20	Behind main instrument display panel adjacent to speedometer (ME)
	4-pin connectors
H4-4	Adjacent to fuel pump under luggage compartment floor
H4-6	Under left-hand front seat
H4-12	By right-hand wheel housing adjacent to receiver/ adjacent to pressure switch for radiator fan on right below windscreen (-M1991)
H4-16	In engine bay behind bulkhead partition, at far right (black)
	6-pin connector
H6-5	In front corner behind light cluster adjacent to washer fluid reservoir
	10-pin connectors
H10-7	In engine bay on left-hand side adjacent to windscreen wiper motor/ under left-hand front seat (-M1991)
H10-13	In engine bay on left-hand side adjacent to windscreen wiper motor

H10-15

H24-1

G2

G5

G7

G8

G24

G25

H10-15	Behind left-hand headlamp
	24-pin connector
H24-1	In engine bay on bulkhead partition/ adjacent to windscreen wiper motor (-M1991)
G2	Grounding point, battery tray, on left-hand wheel housing (M1991-)
G5	Grounding point, rear seat, under left-hand part of seat (M1991-)
G7	Grounding point, engine, at rear of engine on sheet metal bracket under intake manifold (M1991-)
G8	Grounding point, dashboard, adjacent to left-hand front loudspeaker connector (M1991-)
G24	Grounding point, seat member, right-hand front seat member (M1991-)
G25	Grounding point, gearbox (M1991-)

To

Saab Aut
Workshop
S-461 80
SWEDEN

Telefax p

Com
.....
.....
.....
.....
.....
.....
.....
.....
.....
.....
.....
.....
.....
.....
.....
Manı

jxh

ENG **Ordering No. 359323.** English edition. Printed in Sweden. © Saab Automobile AB, 1995.

Saab Automobile AB
Trollhättan, Sweden

Printed in Sweden, Graphic Systems AB, Gbg 1995.25466

jxh